SPECIAL FUNCTIONS DATABOOK

NATIONAL SEMICONDUCTOR

1979 SPECIAL FUNCTIONS DATABOOK

National Semiconductor

MEC
LIBRARY

SPECIAL FUNCTIONS DATABOOK

NATIONAL SEMICONDUCTOR

© National Semiconductor Corporation
2900 Semiconductor Drive, Santa Clara, California 95051
(408) 737-5000/TWX (910) 339-9240

National does not assume any responsibility for use of any circuitry described; no circuit patent licenses are implied, and National reserves the right, at any time without notice, to change said circuitry.

Edge Index by Function

The Special Functions Databook is the only National Semiconductor publication that contains complete information on all of our hybrid semiconductor products.

Included are precision thin film and thick film products which provide the user with standard functions from operational amplifiers to converters with capabilities beyond those of current monolithic technology.

Product selection guides and an application section are also included. For information on new products, contact your local National Semiconductor sales office.

Operational Amplifiers 1

Buffers 2

Instrumentation Amplifiers 3

Sample & Hold Amplifiers 4

Comparators 5

Non-Linear Functions 6

Precision Voltage Regulators and References 7

Analog Switches 8

MOS Clock Drivers 9

Digital Drivers 10

A-D Converters 11

D-A Converters 12

Data Acquisition Cards 13

Active Filters & Telecommunication Products 14

Precision Networks 15

Application Notes 16

Appendices/Physical Dimensions 17

Table of Contents

Section 1 Operational Amplifiers

Operational Amplifier Selection Guide 1-3
LH0001 Low Power Operational Amplifier 1-4
LH0001A/LH0001AC Micropower Operational Amplifier 1-7
LH0003/LH0003C Wide Bandwidth Operational Amplifier 1-10
LH0004/LH0004C High Voltage Operational Amplifier 1-12
LH0005/LH0005A Operational Amplifier 1-15
LH0005C Operational Amplifier 1-18
LH0020/LH0020C High Gain Operational Amplifier 1-20
LH0021/LH0021C 1.0 Amp Power Operational Amplifier
LH0041/LH0041C 0.2 Amp Power Operational Amplifier 1-22
LH0022/LH0022C High Performance FET Op Amp
LH0042/LH0042C Low Cost FET Op Amp
LH0052/LH0052C Precision FET Op Amp 1-29
LH0024/LH0024C High Slew Operational Amplifier 1-36
LH0032/LH0032C Ultra Fast FET Operational Amplifier 1-39
LH0044 Series Precision Low Noise Operational Amplifiers 1-44
LH0045/LH0045C Two Wire Transmitter 1-50
LH0061/LH0061C 0.5 Amp Wide Band Operational Amplifier 1-61
LH0062/LH0062C High Speed FET Operational Amplifier 1-64
LH740A/LH740AC FET Input Operational Amplifier 1-70
LH2101A/LH2201A/LH2301A Dual High Performance Op Amp 1-72
LH2108/LH2208/LH2308, LH2108A/LH2208A/LH2308A
Dual Super Beta Op Amp 1-74
LH24250/LH24250C Dual Programmable Micropower Op Amp 1-76

Section 2 Buffers

Buffer Amplifier Selection Guide 2-3
LH0002/LH0002C Current Amplifier 2-4
LH0033/LH0033C, LH0063/LH0063C Fast and Damn Fast
Buffer Amplifiers 2-7
LH2110/LH2210/LH2310 Dual Voltage Follower 2-18

Section 3 Instrumentation Amplifiers

Instrumentation Amplifier Selection Guide 3-3
LH0036/LH0036C Instrumentation Amplifier 3-4
LH0037/LH0037C Low Cost Instrumentation Amplifier 3-12
LH0038/LH0038C True Instrumentation Amplifier 3-15
LH0084/LH0084C Digitally Programmable
Instrumentation Amplifier 3-26
LF152/LF252/LF352 FET Input Instrumentation Amplifier 3-27

Section 4 Sample & Hold Amplifiers

Sample and Hold Amplifier Selection Guide 4-3
LH0023/LH0023C, LH0043/LH0043C Sample and Hold Circuits 4-4
LH0053/LH0053C High Speed Sample and Hold Amplifier 4-12
LF198/LF298/LF398 Monolithic Sample and Hold Circuits 4-18

Section 5 Comparators

LH2111/LH2211/LH2311 Dual Voltage Comparator 5-3

Table of Contents

Section 6 Non-Linear Functions

Non-Linear Function Selection Guide 6-3
LH0091 True RMS-to-DC Converter 6-4
LH0094 Multifunction Converter 6-9

Section 7 Precision Voltage Regulators and References

Precision Reference and Regulator Selection Guide 7-3
LH0070 Series Precision BCD Buffered Reference
LH0071 Series Precision Binary Buffered Reference 7-4
LH0075 Positive Precision Programmable Regulator 7-8
LH0076 Negative Precision Programmable Regulator 7-13
LM129/LM329 Precision Reference 7-18
LM199A/LM299A/LM399A Precision Reference 7-23

Section 8 Analog Switches

Analog Switch Selection Guide 8-3
Analog Switches/Multiplexers Selection Guide 8-4
Analog Switches Cross Reference Guide 8-5
AH0014/AH0014C DPDT, AH0015C Quad SPST,
AH0019/AH0019C Dual DPST-TTL/DTL Compatible
Analog Switches 8-7
AH0120/AH0130/AH0140/AH0150/AH0160 Series
Analog Switches 8-10
AH2114/AH2114C DPST Analog Switch 8-17

Section 9 MOS Clock Drivers

MOS Clock Driver Selection Guide 9-3
MH0007/MH0007C DC Coupled MOS Clock Driver 9-4
MH0009/MH0009C DC Coupled Two Phase MOS Clock Driver 9-6
MH0012/MH0012C High Speed MOS Clock Driver 9-8
MH0013/MH0013C Two Phase MOS Clock Driver 9-10
DS0025/DS0025C Two Phase MOS Clock Driver 9-14
DS0026, DS0056 5 MHz Two Phase MOS Clock Drivers 9-17

Section 10 Digital Drivers

Digital Driver Selection Guide 10-3
DH0006/DH0006C Current Driver 10-4
DH0008/DH0008C High Voltage, High Currevt Driver 10-7
DH0011/DH0011C/DH0011CN High Voltage
High Current Drivers 10-10
DH0016CN, DH0017CN, DH0018CN High Voltage
High Current Drivers 10-13
DH0028C/DH0028CN Hammer Driver 10-16
DH0034/DH0034C High Speed Dual Level Translator 10-18
DH0035/DH0035C Pin Diode Driver 10-21

Section 11 A-D Converters

Analog-to-Digital Converters 11-3
A/D-D/A Converter/DVM Selection Guide 11-4
ADC1210, ADC1211 12-Bit CMOS A/D Converters 11-5

Table of Contents

Section 11 A-D Converters (continued)

DM2502, DM2503, DM2504 Successive Approximation Registers 11-15

MM54C905/MM74C905 12-Bit Successsive Approximation Register 11-20

Section 12 D-A Converters

Digital-to-Analog Converter Selection Guide 12-3

DAC1200/DAC1201 12-Bit (Binary) Digital-to-Analog Converters DAC1202/DAC1203 3-Digit (BCD) Digital-to-Analog Converters 12-4

DAC1280, DAC1285 12-Bit (Binary), DAC1286, DAC1287 3-Digit (BCD) Digital-to-Analog Converters 12-11

Section 13 Data Acquisition Cards

ADS1216HC 16-Channel, 12-Bit Data Acquisition System with Memory 13-3

Section 14 Active Filters & Telecommunication Products

Active Filter (Building Blocks) Selection Guide 14-3

Active Filter (Tuned) Selection Guide 14-4

AF99 Tunable Bandpass Oscillator 14-5

AF100 Universal Active Filter 14-8

AF150 Universal Wideband Active Filter 14-27

AF151 Dual Universal Active Filter 14-47

AF160 Universal Wideband Active Filter 14-55

AF161 Dual Universal Active Filter 14-74

AF101 High Band Splitter 14-82

AF102 Dial Tone Reject Filter 14-84

AF103 Low Band Splitter 14-86

AF111, AF112, AF113, AF114 Dual Filters 14-88

AF121, AF122 DTMF Bandpass Filters 14-90

AF132 Dual PCM Transmit/Receive Filter 14-94

AF133, AF134 PCM Transmit/Receive Filter 14-98

AF137 Dual PCM Transmit/Receive Filter 14-104

AF104/AF105 AGC Amplifier 14-108

AF110 Dual Detector and Comparator 14-112

AF120 Generalized Impedance Converter, GIC 14-114

Section 15 Precision Networks

RA201 Precision Instrumentation Amplifier Resistor Network 15-3

Section 16 Application Notes

AN-10, Low Power Operational LH0001 Amplifier 16-3

AN-13, Application of the LH0002 Current Amplifier 16-7

AN-28, High-Speed MOS Commutators 16-11

AN-33, Analog-Signal Commutation 16-19

AN-38, Application of MOS Analog Switches 16-25

AN-48, Applications for a New Ultra-High-Speed Buffer 16-33

AN-49, Pin Diode Drivers 16-37

AN-63, New Design Techniques for FET Op Amps 16-43

Table of Contents

Section 16 Application Notes (continued)

AN-75, Applications for a High Speed FET Input Op Amp 16-55
AN-76, Applying Modern Clock Drivers to MOS Memories 16-59
AN-156, Specifying A/D and D/A Converters 16-69
AN-159, Data Acquisition System Interface to Computers 16-75
AN-180, RMS Converters and Their Applications 16-93
AN-215, Digital Telephony and the IC CODEC 16-97
AN-219, Gain Measurements in a CODEC System 16-113
AN-221, Applications of Hybrid Active Filters to Telecommunications Systems 16-117
MB-9, MOS Clock Drivers 16-121
LB-2, Feedforward Compensation Speeds Op Amp 16-123
LB-14, Speed Up the LM108 Feedforward Compensation 16-125
LB-17, LM118 Op Amp Slews 70 V/μs 16-127
TP3000 CODEC System 16-129

Section 17 Appendices/Physical Dimensions

Reliability and the Hybrid Device 17-3
Production Flow 17-10
883B/RETS™ Program 17-12
Package Outlines 17-22
Heat Sinks & Sockets 17-35

Alphanumerical Index

ADC1210, ADC1211 12-Bit CMOS A/D Converters 11-5
ADS1216HC 16-Channel, 12-Bit Data Acquisition System with Memory 13-3
AF99 Tunable Bandpass Oscillator 14-5
AF100 Universal Active Filter 14-8
AF101 High Band Splitter 14-82
AF102 Dial Tone Reject Filter 14-84
AF103 Low Band Splitter 14-86
AF104/AF105 AGC Amplifier 14-108
AF110 Dual Detector and Comparator 14-112
AF111, AF112, AF113, AF114 Dual Filters 14-88
AF120 Generalized Impedance Converter, GIC 14-114
AF121, AF122 DTMF Bandpass Filters 14-90
AF132 Dual PCM Transmit/Receive Filter 14-94
AF133, AF134 PCM Transmit/Receive Filter 14-98
AF137 Dual PCM Transmit/Receive Filter 14-104
AF150 Universal Wideband Active Filter 14-27
AF151 Dual Universal Active Filter 14-47
AF160 Universal Wideband Active Filter 14-55
AF161 Dual Universal Active Filter 14-74
AH0014/AH0014C DPDT, AH0015C Quad SPST, AH0019/AH0019C Dual DPST-TTL/DTL Compatible Analog Switches 8-7
AH0120/AH0130/AH0140/AH0150/AH0160 Series Analog Switches 8-10
AH2114/AH2114C DPST Analog Switch 8-17
DAC1200/DAC1201 12-Bit (Binary) Digital-to-Analog Converters DAC1202/DAC1203 3-Digit (BCD) Digital-to-Analog Converters 12-4
DAC1280, DAC1285 12-Bit (Binary), DAC1286, DAC1287 3-Digit (BCD) Digital-to-Analog Converters 12-11
DH0006/DH0006C Current Driver 10-4
DH0008/DH0008C High Voltage, High Current Driver 10-7
DH0011/DH0011C/DH0011CN High Voltage High Current Drivers 10-10
DH0016CN, DH0017CN, DH0018CN High Voltage High Current Drivers 10-13
DH0028C/DH0028CN Hammer Driver 10-16
DH0034/DH0034C High Speed Dual Level Translator 10-18
DH0035/DH0035C Pin Diode Driver 10-21
DM2502, DM2503, DM2504 Successive Approximation Registers 11-15
DS0025/DS0025C Two Phase MOS Clock Driver 9-14
DS0026, DS0056 5 MHz Two Phase MOS Clock Drivers 9-17
LF152/LF252/LF352 FET Input Instrumentation Amplifier 3-27
LF198/LF298/LF398 Monolithic Sample and Hold Circuits 4-18
LH0001 Low Power Operational Amplifier 1-4
LH0001A/LH0001AC Micropower Operational Amplifier 1-7
LH0002/LH0002C Current Amplifier 2-4
LH0003/LH0003C Wide Bandwidth Operational Amplifier 1-10
LH0004/LH0004C High Voltage Operational Amplifier 1-12
LH0005/LH0005A Operational Amplifier 1-15

Alphanumerical Index

LH0005C Operational Amplifier 1-18
LH0020/LH0020C High Gain Operational Amplifier 1-20
LH0021/LH0021C 1.0 Amp Power Operational Amplifier 1-22
LH0022/LH0022C High Performance FET Op Amp 1-29
LH0023/LH0023C, LH0043/LH0043C Sample and Hold Circuits 4-4
LH0024/LH0024C High Slew Operational Amplifier 1-36
LH0032/LH0032C Ultra Fast FET Operational Amplifier 1-39
LH0033/LH0033C, LH0063/LH0063C Fast and Damn Fast Buffer Amplifiers 2-7
LH0036/LH0036C Instrumentation Amplifier 3-4
LH0037/LH0037C Low Cost Instrumentation Amplifier 3-12
LH0038/LH0038C True Instrumentation Amplifier 3-15
LH0041/LH0041C 0.2 Amp Power Operational Amplifier 1-22
LH0042/LH0042C Low Cost FET Op Amp 1-29
LH0044 Series Precision Low Noise Operational Amplifiers 1-44
LH0045/LH0045C Two Wire Transmitter 1-50
LH0052/LH0052C Precision FET Op Amp 1-29
LH0053/LH0053C High Speed Sample and Hold Amplifier 4-12
LH0061/LH0061C 0.5 Amp Wide Band Operational Amplifier 1-61
LH0062/LH0062C High Speed FET Operational Amplifier 1-64
LH0070 Series Precision BCD Buffered Reference
LH0071 Series Precision Binary Buffered Reference 7-4
LH0075 Positive Precision Programmable Regulator 7-8
LH0076 Negative Precision Programmable Regulator 7-13
LH0084/LH0084C Digitally Programmable Instrumentation Amplifier 3-26
LH0091 True RMS-to-DC Converter 6-4
LH0094 Multifunction Converter 6-9
LH2101A/LH2201A/LH2301A Dual High Performance Op Amp 1-72
LH2108/LH2208/LH2308, LH2108A/LH2208A/LH2308A Dual Super Beta Op Amp 1-74
LH2110/LH2210/LH2310 Dual Voltage Follower 2-18
LH2111/LH2211/LH2311 Dual Voltage Comparator 5-3
LH24250/LH24250C Dual Programmable Micropower Op Amp 1-76
LH740A/LH740AC FET Input Operational Amplifier 1-70
LM129/LM329 Precision Reference 7-18
LM199A/LM299A/LM399A Precision Reference 7-23
MH0007/MH0007C DC Coupled MOS Clock Driver 9-4
MH0009/MH0009C DC Coupled Two Phase MOS Clock Driver 9-6
MH0012/MH0012C High Speed MOS Clock Driver 9-8
MH0013/MH0013C Two Phase MOS Clock Driver 9-10
MM54C905/MM74C905 12-Bit Successsive Approximation Register 11-20

Alphanumerical Index

LH0005C Operational Amplifier 1-18
LH0020/LH0020C High Gain Operational Amplifier 1-20
LH0021/LH0021C 1.0 Amp Power Operational Amplifier 1-22
LH0022/LH0022C High Performance FET Op Amp 1-29
LH0024/LH0024C, LH0043/LH0043C Sample and Hold Circuits 4-4
LH0024/LH0024C High Slew Operational Amplifier 1-30
LH0032/LH0032C Ultra Fast FET Operational Amplifier 1-38
LH0033/LH0033C, LH0063/LH0063C Fast and Damn Fast Buffer Amplifiers 2-7
LH0036/LH0036C Instrumentation Amplifier 3-4
LH0037/LH0037C Low Cost Instrumentation Amplifier 3-12
LH0038/LH0038C True Instrumentation Amplifier 3-15
LH0041/LH0041C 0.2 Amp Power Operational Amplifier 1-22
LH0042/LH0042C Low Cost FET Op Amp 1-29
LH0044 Series Precision Low Noise Operational Amplifiers 1-44
LH0045/LH0045C Two Wire Transmitter 1-50
LH0052/LH0052C Precision FET Op Amp 1-29
LH0053/LH0053C High Speed Sample and Hold Amplifier 4-12
LH0061/LH0061C 0.5 Amp Wide Band Operational Amplifier 1-61
LH0062/LH0062C High Speed FET Operational Amplifier 1-64
LH0070 Series Precision BCD Buffered Reference 7-4
LH0071 Series Precision Binary Buffered Reference 7-8
LH0075 Positive Precision Programmable Regulator 7-13
LH0076 Negative Precision Programmable Regulator 7-13
LH0084/LH0084C Digitally Programmable Instrumentation Amplifier 3-20
LH0091 True RMS-to-DC Converter 6-4
LH0094 Multifunction Converter 6-9
LH2101A/LH2201A/LH2301A Dual High Performance Op Amp 1-72
LH2108/LH2208/LH2308, LH2108A/LH2208A/LH2308A Dual Super Beta Op Amp 1-74
LH2110/LH2210/LH2310 Dual Voltage Follower 2-18
LH2111/LH2211/LH2311 Dual Voltage Comparator 5-3
LH2420/LH2520 Dual Programmable Micropower Op Amp 1-78
LH7404/LH7404C FET Input Operational Amplifier 1-70
LM129/LM229 Precision Reference 7-18
LM199/LM299/LM399A Precision Reference 7-23
MH0007/MH0007C OC Coupled MOS Clock Driver 9-4
MH0008/MH0008C DC Coupled Two Phase MOS Clock Driver 9-6
MH0012/MH0012C High Speed MOS Clock Driver 9-8
MH0013/MH0013C Two Phase MOS Clock Driver 9-10
MM54C209/MM74C209 12-Bit Successive Approximation Register 11-20

Section 1

Operational Amplifiers

1

Section 1. Operational Amplifiers

Features	Input Offset Voltage Max (mV)	Input Offset Voltage Drift Typ (μV/°C)	Input Offset Current Max (nA)	Input Bias Current Max (nA)	Voltage Gain Min (Volts/mV)	Bandwidth $A_V = 1$ Typ (MHz)	Slew Rate $A_V = 1$ Typ (V/μs)	Output Current (mA)	Supply Voltage Min (V)	Supply Voltage Max (V)	Temperature Range −55°C to 125°C	Temperature Range −25°C to 85°C	Temperature Range 0°C to 70°C	Page Number
Micropower Low Drift	1	4	20	100	25	1	0.25	±5	±5	±20	LH0001			1-4
	2.5	3	20	100	25	1	0.25	±5	±5	±20	LH0001A			1-7
	5	3	60	200	25	1	0.25	±5	±5	±20		LH0001AC		1-7
Wideband	3	4	200	2000	15	30	30	±100	±5	±20	LH0003	LH0003C		1-10
High Voltage	1	4	20	100	30	1	0.25	±15	±5	±45	LH0004			1-12
	1.5	4	45	120		1	0.25	±15	±5	±45		LH0004C		1-12
Wideband	3	10	5	25	4	30 (1)	20 (1)	±50	±9	±20	LH0005A			1-15
	10	20	20	50	2	30 (1)	20 (1)	±50	±9	±20	LH0005			1-15
	10	25	25	100	2	30 (1)	20 (1)	±50	±9	±20		LH0005C		1-18
High Gain Medium Power	2.5	10	50	250	100	1	0.25	±40	±5	±22	LH0020			1-20
	6	10	200	500	50	1	0.25	±40	±5	±22		LH0020C		1-20
High Power	3	3	100	300	100	1	3	±1000	±5	±18	LH0021			1-22
	6	5	200	500	100	1	3	±1000	±5	±18		LH0021C		1-22
	3	3	100	300	100	1	3	±200	±5	±18	LH0041			1-22
	6	5	200	500	100	1	3	±200	±5	±18		LH0041C		1-22
	4	5	100	300	50	15	70	±500	±5	±18	LH0061			1-61
	10	5	200	500	25	15	70	±500	±5	±18		LH0061C		1-61
General Purpose FET Input	4	5	0.002	0.01	100	1	3	±10	±5	±22	LH0022			1-29
	6	5	0.005	0.025	75	1	3	±10	±5	±22		LH0022C		1-29
	20	5	0.005	0.025	50	1	3	±10	±5	±22	LH0042			1-29
	20	10	0.01	0.05	25	1	3	±10	±5	±22		LH0042C		1-29
	0.5	2	0.0005	0.0025	100	1	3	±10	±5	±22	LH0052			1-29
	1	5	0.001	0.005	75	1	3	±10	±5	±22		LH0052C		1-29
Wideband High Slew Rate	4	20	5,000	30,000	4	50	500	±10	±9	±18	LH0024			1-36
	8	25	15,000	40,000	3	50	400	±10	±9	±18		LH0024C		1-36
Wideband FET Input	5	25	0.025	0.1	1	70	500	±10	±5	±18	LH0032			1-39
	15	25	0.05	0.2	1	70	500	±10	±5	±18		LH0032C		1-39
Precision FET Input	0.05	0.2	5	30	500	0.4	0.06	±1.3	±3	±20	LH0044			1-44
	0.1	0.2	5	30	500	0.4	0.06	±1.3	±3	±20		LH0044C		1-44
	0.025	0.1	2.5	15	1,000	0.4	0.06	±1.3	±3	±20	LH0044A			1-44
	0.025	0.1	2.5	15	1,000	0.4	0.06	±1.3	±3	±20		LH0044AC		1-44
	0.05	0.2	5	30	500	0.4	0.06	±1.3	±3	±20		LH0044B		1-44
Medium Speed, FET Input	5	5	0.002	0.01	50	15	70	±6	±5	±20	LH0062			1-64
	15	10	0.005	0.065	25	15	70	±6	±5	±20		LH0062C		1-64
Dual Precision	2	15	10	75	50	1	0.5	±5	±3	±22	LH2101A			1-72
	2	15	10	75	50	1	0.5	±5	±3	±22		LH2201A		1-72
	7.5	30	50	250	25	1	0.5	±5	±3	±22			LH2301A	1-72
	0.5	5	0.2	2	80	1	0.3	±1	±2	±20	LH2108A			1-74
	0.5	5	0.2	2	80	1	0.3	±1	±2	±20		LH2208A		1-74
	0.5	5	1.0	7	80	1	0.3	±1	±2	±20			LH2308A	1-74
	2	15	0.2	2	50	1	0.3	±1	±2	±20	LH2108			1-74
	2	15	0.2	2	50	1	0.3	±1	±2	±20		LH2208		1-74
	7.5	30	1.0	7	50	1	0.3	±1	±2	±20			LH2308	1-74
Dual Low Power	3	—	5	15	100	0.25	0.16	±0.75	±1	±18	LH24250			1-76
	6	—	10	30	75	0.25	0.16	±0.75	±1	±18		LH24250C		1-76

Note: For information on monolithic operational amplifiers, consult the *Linear Databook*.

Note 1: Specified for $A_V = -10$.

National Semiconductor

LH0001 Low Power Operational Amplifier

general description

The LH0001 is a general purpose operational amplifier designed for extremely low quiescent power. Typical NO-load dissipation at 25°C is 2 milliwatts at $V_S = \pm 15$ volts, and 0.5 milliwatts at $V_S = \pm 5$ volts. Even with this low power dissipation, the LH0001 will deliver ±10 volts into a 2K load with ±15 volt supplies, and typical short circuit currents of 20 to 30 milliamps. Additional features are:

- Operation from ±5V to ±20V
- Very low offset voltage: typically 200 μV at 25°C, 600 μV at −55°C to 125°C
- Very low input offset current: typically 3 nA at 25°C, 6 nA at −55°C
- Low noise: typically 3 μV rms
- Frequency compensation with 2 small capacitors
- Output may be clamped at any desired level
- Output is continuously short circuit proof

The LH0001 is ideally suited for space borne applications or where battery operated equipment requires extremely low power dissipation.

schematic and connection diagrams

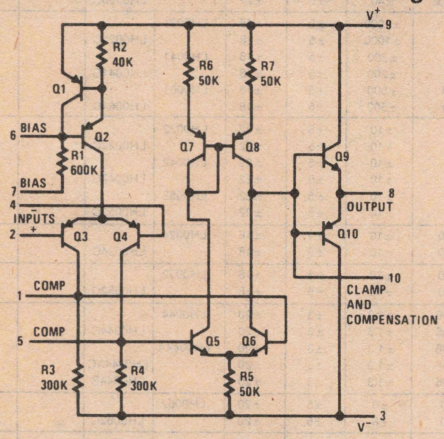

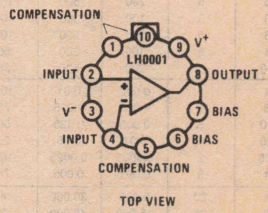

Note: Pin 7 must be grounded or connected to a voltage at least 5 volts more negative than the positive supply (Pin 9). Pin 7 may be connected to the negative supply however the standby current will be increased. A resistor may be inserted in series with Pin 7 up to a maximum of 100 kΩ per volt for the voltage difference between Pin 3 and Pin 9.

Order Number LH0001H
See Package H10B

typical applications

Voltage Follower

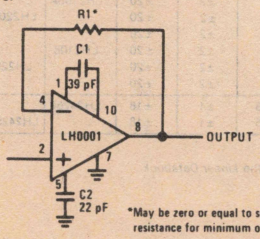

*May be zero or equal to source resistance for minimum offset.

Voltage Comparator for Driving MOS Circuits

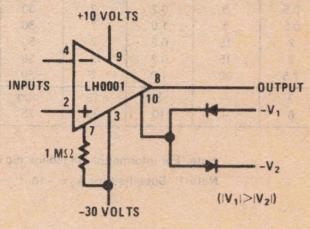

Integrator with Bias Current Compensation

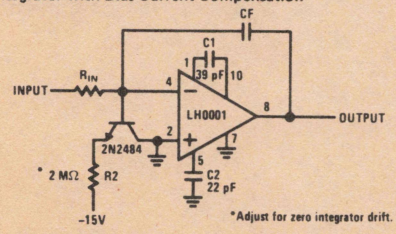

*Adjust for zero integrator drift.

External Current Limiting Method

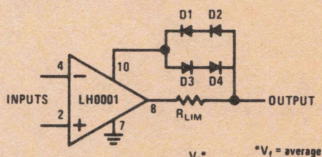

$I_{OUT} \leq \frac{V_f^*}{R_{LIM}}$

*V_f = average forward voltage drop of diodes D1 to D4 at 20 to 50 μA.

*Previously called NH0001

absolute maximum ratings

Supply Voltage	±20V
Power Dissipation (see Curve)	400 mW
Differential Input Voltage	±7V
Input Voltage	Equal to supply
Short Circuit Duration (Note 1)	Continuous
Operating Temperature Range	−55°C to +125°C
Storage Temperature Range	−65°C to +150°C
Lead Temperature (Soldering 10 sec.)	300°C

electrical characteristics (Note 2)

PARAMETER	TEMP (°C)	CONDITIONS	MIN	TYP	MAX	UNITS
Input Offset Voltage	25	$R_S \leq 100\,\Omega$		0.2	1.0	mV
	−55 to 125	$R_S \leq 100\,\Omega$		0.6	2.0	mV
Input Offset Current	25 to 125				20	nA
	−55				100	nA
Input Bias Current	25 to 125				100	nA
	−55				300	nA
Supply Current (+)	25	$V_S = \pm 20V$		90	125	μA
	125	$V_S = \pm 20V$		70	100	μA
	−55	$V_S = \pm 20V$		100	150	μA
Supply Current (−)	25	$V_S = \pm 20V$		60	90	μA
	125	$V_S = \pm 20V$		45	75	μA
	−55	$V_S = \pm 20V$		75	125	μA
Voltage Gain	−55 to 25	$R_L = 100\,K\Omega$, $V_S = \pm 15V$, $V_{OUT} = \pm 10V$	25	60		V/mV
	125	$R_L = 100\,K\Omega$, $V_S = \pm 15V$, $V_{OUT} = \pm 10V$	10	30		V/mV
V_{OUT}	25	$V_S = \pm 15V$, $R_L = 2K$	10	11.5		V
	−55	$V_S = \pm 15V$, $R_L = 2K$	9	10.5		V
	125	$V_S = \pm 15V$, $R_L = 2K$	11	12.5		V
Common Mode Rejection Ratio	−55 to 125	$V_S = \pm 15V$, $V_{IN} = \pm 10V$, $R_S \leq 100\,\Omega$	70	90		dB
Power Supply Rejection Ratio	−55 to 125	$V_S = \pm 15V$, $\Delta V = 5V$ to $20V$, $R_S = \leq 100\,\Omega$	70	90		dB
Input Resistance	25		0.5	1.5		MΩ
Average Temperature Coefficient of Offset Voltage	−55 to 125	$R_S \leq 100\,\Omega$		4		μV/°C
Average Temperature Coefficient of Bias Current	−55 to 125			0.4		μA/°C
Equivalent Input Noise Voltage	25	$R_S = 1K$, f = 5 Hz to 1000 Hz, $V_S = \pm 15V$		3.0		μV rms

Note 1: Based on maximum short circuit current of 50 mA, device may be operated at any combination of supply voltages, and temperature to be within rated power dissipation (see Curve).

Note 2: These specifications apply for Pin 7 grounded, for $\pm 5V \leq V_S \leq \pm 20V$, with Capacitor C1 = 39 pF from Pin 1 to Pin 10, and C2 = 22 pF from Pin 5 to ground, unless otherwise specified.

guaranteed performance

Input Voltage Range

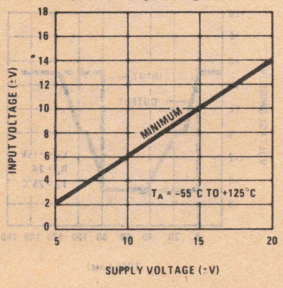

Small Signal Voltage Gain

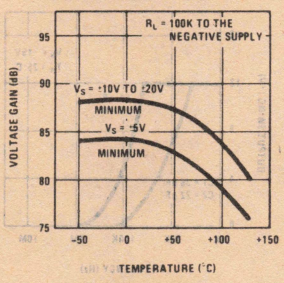

Maximum Power Dissipation

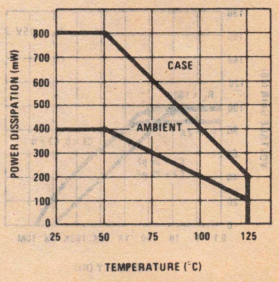

typical performance characteristics

Negative Supply Current

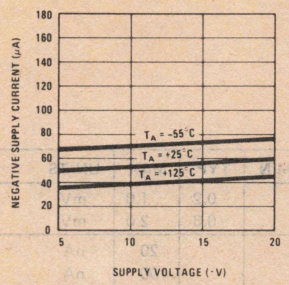

Positive Supply Currents

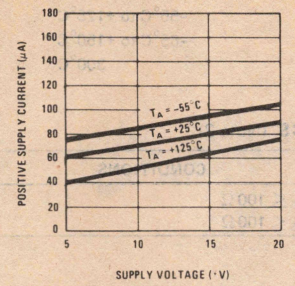

Short Circuit Output Current

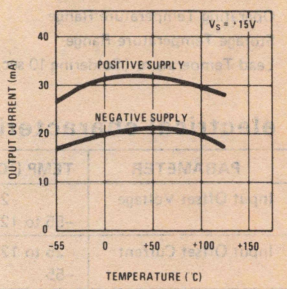

Input Bias Current

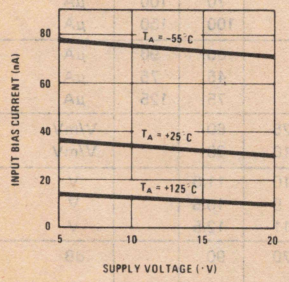

Input Offset Current

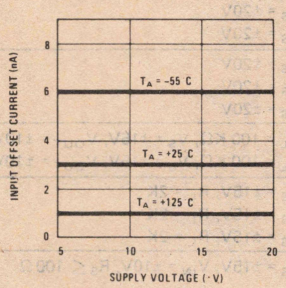

Input Resistance

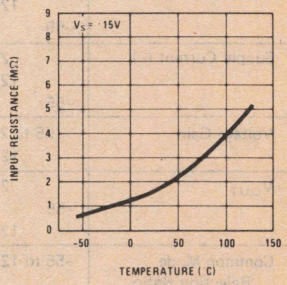

Negative Output Voltage Swing

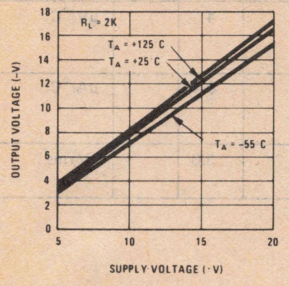

Positive Output Voltage Swing

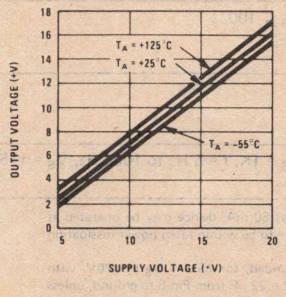

Voltage Gain

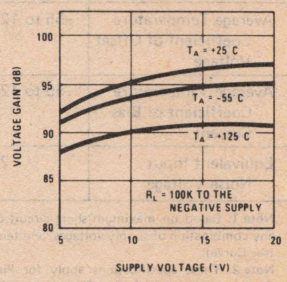

Open Loop Frequency Response

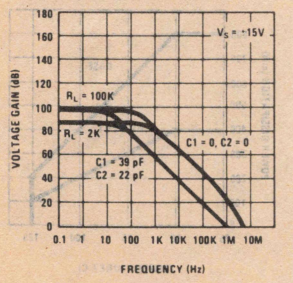

Large Signal Frequency Response

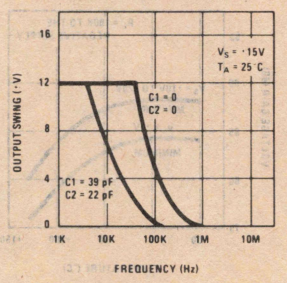

Voltage Follower Pulse Response

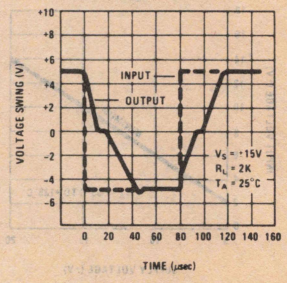

National Semiconductor

LH0001A/LH0001AC Micropower Operational Amplifier

general description

The LH0001A/LH0001AC is a micropower, high performance integrated circuit operational amplifier designed to have a no load power dissipation of less than 0.5 mW at $V_S = \pm 5V$ and less than 2 mW at $V_S = \pm 20V$. Open loop gain is greater than 50k and input bias current is typically 20 nA.

features

- 1.0 mV Typical low offset voltage
- 5 nA Typical low offset current
- 3 μVrms Typical low noise
- Simple frequency compensation
- Moderate bandwidth and slewrate
- Output short circuit proof

The LH0001A/LH0001AC may be substituted directly for the LH0001/LH0001C. Low power consumption, high open loop gain, and excellent input characteristics make the LH0001A an ideal amplifier for many low power applications such as battery powered instrument or transducer amplifiers.

The LH0001A is specified for operation over the −55°C to +125°C military temperature range. The LH0001AC is specified for operation over the 0°C to +85°C temperature range.

schematic diagram*

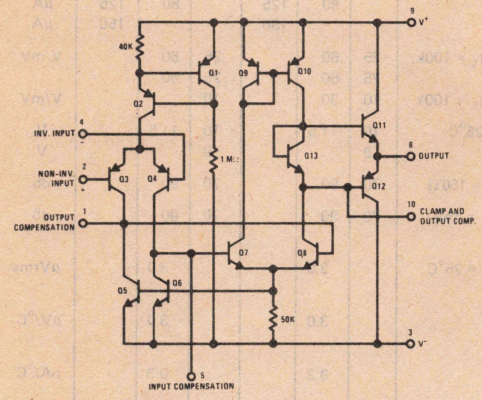

*Pin shown for TO-5 package

typical application*

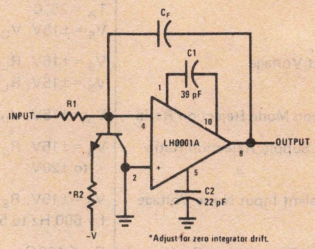

Integrator with Bias Compensation

connection diagrams

Metal Can Package

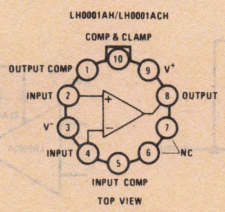

Order Number
LH0001AH or LH0001ACH
See Package H10F

Cavity Dual-In-Line Package

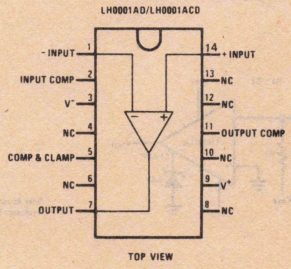

Order Number
LH0001AD or LH0001ACD
See Package D14E

absolute maximum ratings

Supply Voltage		±20V
Power Dissipation (See curve)		400 mW
Differential Input Voltage		±7V
Input Voltage		$\pm V_S$
Short Circuit Duration		Continuous
Operating Temperature Range	LH0001A	−55°C to 125°C
	LH0001AC	−25°C to 85°C
Storage Temperature Range		−65°C to 150°C
Lead Temperature (Soldering, 10 sec)		300°C

electrical characteristics (Note 1)

PARAMETERS	CONDITIONS	LH0001A			LH0001AC			UNITS
		MIN	TYP	MAX	MIN	TYP	MAX	
Input Offset Voltage	$R_S \leq 100\,\Omega$, $T_A = 25°C$		1.0	2.5		2.0	5.0	mV
				4.0			7.0	mV
Input Bias Current	$T_A = 25°C$		20	100		20	200	nA
				300			300	nA
Input Offset Current	$T_A = 25°C$		5	20		20	60	nA
				100			100	nA
Supply Current	$V_S = \pm 20V$, $T_A = 25°C$		80	125		80	125	μA
	$V_S = \pm 20V$			150			150	μA
Voltage Gain	$V_S = \pm 15V$, $V_{OUT} = 10V$, $R_L = 100k$,	25	60		25	60		V/mV
	$T_A = 25°C$	25	60		25	60		
	$V_S = \pm 15V$, $V_{OUT} = 10V$, $R_L = 100k$	10	30		10			V/mV
Output Voltage	$V_S = \pm 15V$, $R_L = 2k$, $T_A = 25°C$	10	11.5		10	11.5		V
	$V_S = \pm 15V$, $R_L = 2k$	9			9			V
Common Mode Rejection Ratio	$V_S = \pm 15V$, $V_{IN} = 10V$, $R_S = 100\,\Omega$	70	90		70	90		db
Power Supply Rejection Ratio	$V_S = \pm 15V$, $R_S = 100\,\Omega$, $V_S = \pm 5V$ to $\pm 20V$	70	90		70	90		db
Equivalent Input Noise Voltage	$V_S = \pm 15V$, $R_S = 100\,\Omega$, $T_A = 25°C$ f = 500 Hz to 5 kHz		3.0			3.0		μVrms
Average Temperature Coefficient of Offset Voltage	$R_S \leq 100\,\Omega$		3.0			3.0		μV/°C
Average Temperature Coefficient of Bias Current			0.3			0.3		nA/°C

Note 1: The specifications apply for $\pm 5V \leq V_S \leq 20V$, with output compensation capacitor, C_1 = 39 pF, input compensation capacitor, C_2 = 22 pF, −55°C to 125°C for the LH0001A and −25°C to +85°C for the LH0001AC unless otherwise specified.

typical applications

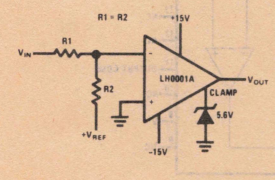

TTL/DTL Compatible Comparator

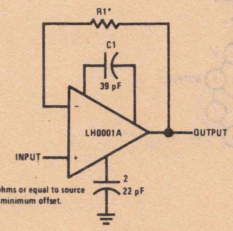

*May be zero ohms or equal to source resistance for minimum offset.

Voltage Follower

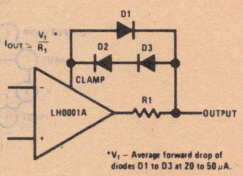

*V_f – Average forward drop of diodes D1 to D3 at 20 to 50 μA.

External Output Current Limiting

typical performance characteristics

Maximum Power Dissipation

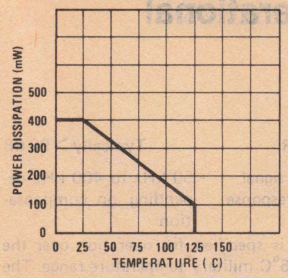

Supply Current

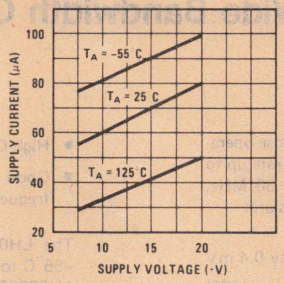

Input Offset Current

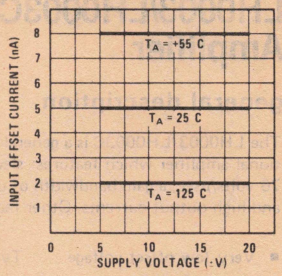

Input Bias Current

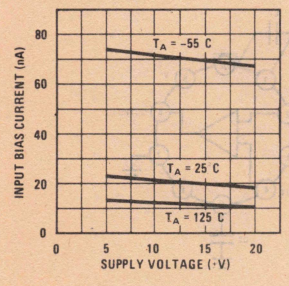

Input Voltage Range

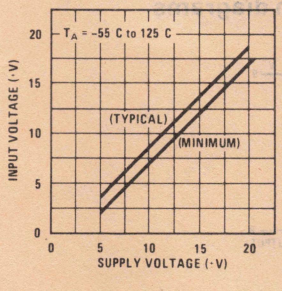

Voltage Follower Pulse Response

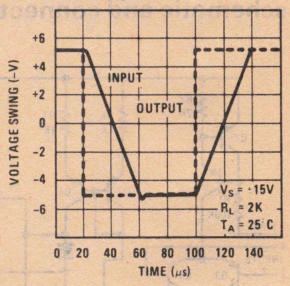

Negative Output Voltage Swing

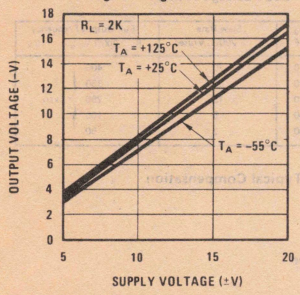

Positive Output Voltage Swing

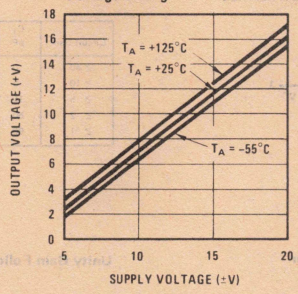

Voltage Gain

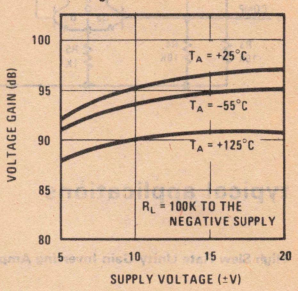

Open Loop Frequency Response

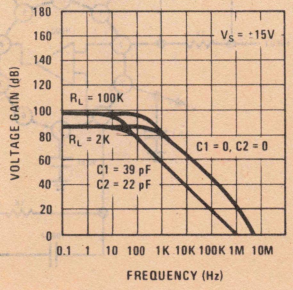

Large Signal Frequency Response

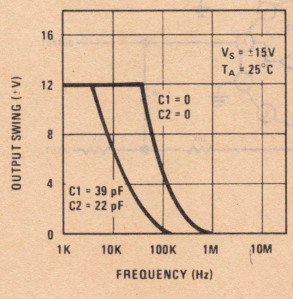

National Semiconductor

LH0003/LH0003C Wide Bandwidth Operational Amplifier

general description

The LH0003/LH0003C is a general purpose operational amplifier which features: slewing rate up to 70 volts/μsec, a gain bandwidth of up to 30 MHz, and high output currents. Other features are:

- Very low offset voltage — Typically 0.4 mV
- Large output swing — >±10V into 100Ω load
- High CMRR — Typically > 90 dB
- Good large signal frequency response — 50 kHz to 400 kHz depending on compensation

The LH0003 is specified for operation over the −55°C to +125°C military temperature range. The LH0003C is specified for operation over the 0°C to +85°C temperature range.

schematic and connection diagrams

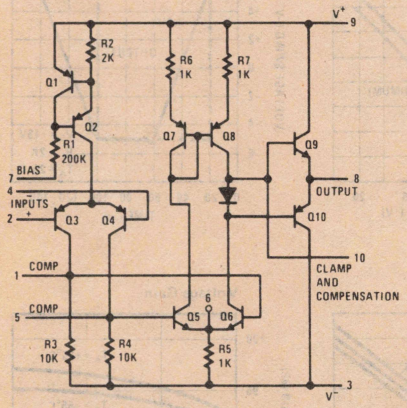

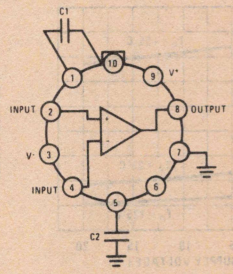

TOP VIEW

Order Number LH0003H or LH0003CH
See Package H10B

Circuit Gain	C_1 pF	C_2 pF	Slew Rate $R_L > 200\Omega$, V/μsec	Full Output Frequency R_L 200Ω V_{OUT} ±10 V
≥ 40	0	0	70	400
≥ 10	5	30	30	350
≥ 5	15	30	15	250
≥ 2	50	50	5	100
≥ 1	90	90	2	50

kHz

Typical Compensation

typical applications

High Slew Rate Unity Gain Inverting Amplifier

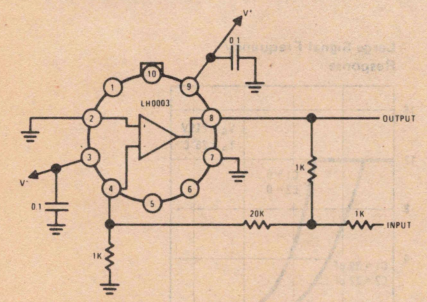

Unity Gain Follower

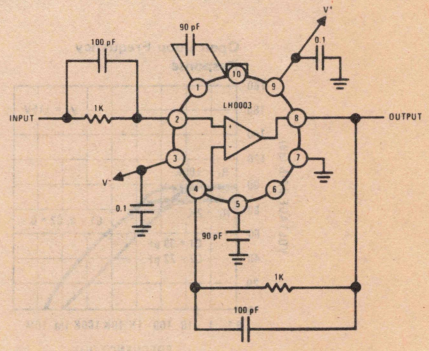

*Previously called NH0003/NH0003C

absolute maximum ratings

Supply Voltage		±20V
Power Dissipation		See curve
Differential Input Voltage		±7V
Input Voltage		Equal to supply
Load Current		120 mA
Operating Temperature Range	LH0003	−55°C to +125°C
	LH0003C	0°C to +85°C
Storage Temperature Range		−65°C to +150°C
Lead Temperature (Soldering, 10 sec)		300°C

electrical characteristics (Notes 1 & 2)

PARAMETER	CONDITIONS	MIN	TYP	MAX	UNITS
Input Offset Voltage	$R_S < 100\Omega$		0.4	3.0	mV
Input Offset Current			0.02	0.2	μA
Input Bias Current			0.4	2.0	μA
Supply Current	$V_S = \pm 20V$		1.2	3	mA
Voltage Gain	$R_L = 100k$, $V_S = \pm 15V$, $V_{OUT} = \pm 10V$	20	70		V/mV
Voltage Gain	$R_L = 2k$, $V_S = \pm 15V$, $V_{OUT} = \pm 10V$	15	40		V/mV
Output Voltage Swing	$V_S = \pm 15$, $R_L = 100\Omega$	±10	±12		V
Input Resistance			100		kΩ
Average Temperature Coefficient of Offset Voltage	$R_S < 100\Omega$		4		μV/°C
Average Temperature Coefficient of Bias Current			8		nA/°C
CMRR	$R_S < 100\Omega$, $V_S = \pm V$, $V_{IN} = \pm 10V$	70	90		dB
PSRR	$R_S < 100\Omega$, $V_S = \pm 15V$, $\Delta V = 5V$ to 20V	70	90		dB
Equivalent Input Noise Voltage	$R_S = 100\Omega$, f = 10 kHz to 100 kHz $V_S = \pm 15V$ dc		1.8		μVrms

Note 1. These specifications apply for Pin 7 grounded, for $\pm 5V < V_S < \pm 20V$, with capacitor $C_1 = 90$ pF from Pin 1 to Pin 10 and $C_2 = 90$ pF from Pin 5 to ground, over the specified operating temperature range, unless otherwise specified.

Note 2. Typical values are for $t_{AMBIENT} = 25°C$ unless otherwise specified.

typical performance

Maximum Power Dissipation

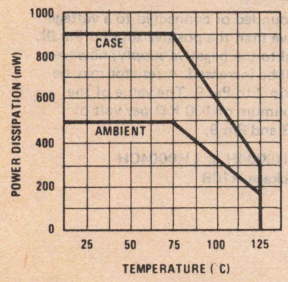

Large Signal Frequency Response

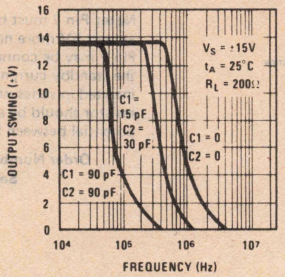

Open Loop Frequency Response

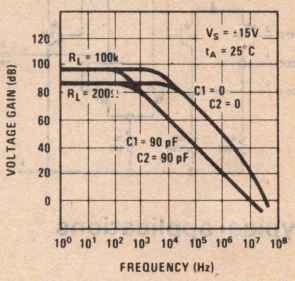

National Semiconductor

LH0004/LH0004C High Voltage Operational Amplifier

general description

The LH0004/LH0004C is a general purpose operational amplifier designed to operate from supply voltages up to ±40V. The device dissipates extremely low quiescent power, typically 8 mW at 25°C and V_S = ±40V. Additional features include:

- Capable of operation over the range of ±5V to ±40V
- Large output voltage typically ±35V for the LH0004 and ±33V for the LH0004C into a 2 KΩ load with ±40V supplies
- Low input offset current typically 20 nA for the LH0004 and 45 nA for the LH0004C
- Low input offset voltage typically 0.3 mV
- Frequency compensation with 2 small capacitors
- Low power consumption 8 mW at ±40V

The LH0004's high gain and wide range of operating voltages make it ideal for applications requiring large output swing and low power dissipation.

The LH0004 is specified for operation over the −55°C to +125°C military temperature range. The LH0004C is specified for operation over the 0°C to +85°C temperature range.

applications

- Precision high voltage power supply
- Resolver excitation
- Wideband high voltage amplifier
- Transducer power supply

schematic and connection diagrams

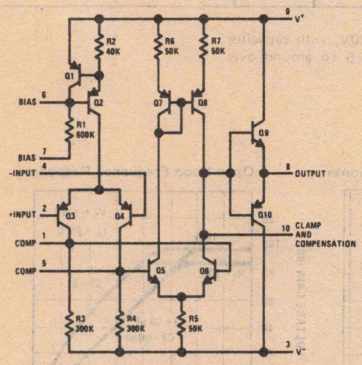

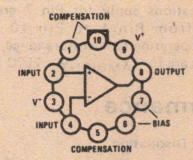

Note: Pin 7 must be grounded or connected to a voltage at least 5V more negative than the positive supply (Pin 9). Pin 7 may be connected to the negative supply; however, the standby current will be increased. A resistor may be inserted in series with Pin 7 to Pin 9. The value of the resistor should be a maximum of 100 KΩ per volt of potential between Pin 3 and Pin 9.

Order Number LH0004H or LH0004CH
See Package H10B

typical applications

Voltage Follower

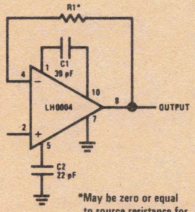

*May be zero or equal to source resistance for minimum offset.

Input Offset Voltage Adjust

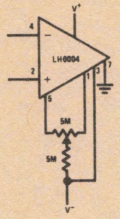

External Current Limiting Method

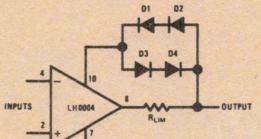

$I_{OUT} \leq \frac{V_f^*}{R_{LIM}}$

*V_f = average forward voltage drop of diodes D1 to D4 at 20 to 50 μA.

High Compliance Current Source

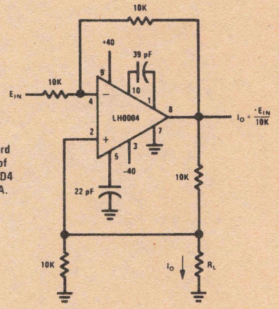

*Previously called NH0004/NH0004C

absolute maximum ratings

Supply Voltage, Continuous	±45V
Supply Voltage, Transient (≤0.1 sec, no load)	±60V
Power Dissipation (See curve)	400 mW
Differential Input Voltage	±7V
Input Voltage	Equal to supply
Short Circuit Duration	3 sec
Operating Temperature Range LH0004	−55°C to +125°C
LH0004C	0°C to 85°C
Storage Temperature Range	−65°C to +150°C
Lead Temperature (Soldering, 10 sec)	300°C

electrical characteristics (Note 1)

PARAMETER	CONDITIONS	LH0004			LH0004C			UNITS
		MIN	TYP	MAX	MIN	TYP	MAX	
Input Offset Voltage	$R_S \leq 100\,\Omega$, $T_A = 25°C$		0.3	1.0		0.3	1.5	mV
	$R_S \leq 100\,\Omega$			2.0			3.0	mV
Input Bias Current	$T_A = 25°C$		20	100		30	120	nA
				300			300	nA
Input Offset Current	$T_A = 25°C$		3	20		10	45	nA
				100			150	nA
Positive Supply Current	$V_S = \pm40V$, $T_A = 25°C$		110	150		110	150	μA
	$V_S = \pm40V$			175			175	μA
Negative Supply Current	$V_S = \pm40V$, $T_A = 25°C$		80	100		80	100	μA
	$V_S = \pm40V$			135			135	μA
Voltage Gain	$V_S = \pm40V$, $R_L = 100k$, $T_A = 25°C$, $V_{OUT} = \pm30V$	30	60		30	60		V/mV
	$V_S = \pm40V$, $R_L = 100k$, $V_{OUT} = \pm30V$	10			10			V/mV
Output Voltage	$V_S = \pm40V$, $R_L = 10k$	±30	±35		±30	±33		V
CMRR	$V_S = \pm40V$, $R_S \leq 5k$, $V_{IN} = \pm33V$	70	90		70	90		dB
PSRR	$V_S = \pm40V$, $R_S \leq 5k$, $\Delta V = 20V$ to 40V	70	90		70	90		dB
Average Temperature Coefficient Offset Voltage	$R_S \leq 100\,\Omega$		4.0			4.0		μV/°C
Average Temperature Coefficient of Offset Current			0.4			0.4		nA/°C
Equivalent Input Noise Voltage	$R_S = 100\,\Omega$, $V_S = \pm40V$, f = 500 Hz to 5 kHz, $T_A = 25°C$		3.0			3.0		μVrms

Note 1: These specifications apply for $\pm5V \leq V_S \leq \pm40V$, Pin 7 grounded, with capacitors C1 = 39 pF between Pin 1 and Pin 10, C2 = 22 pF between Pin 5 and ground, −55°C to +125°C for the LH0004, and 0°C to +85°C for the LH0004C unless otherwise specified.

typical performance

Input Voltage Range

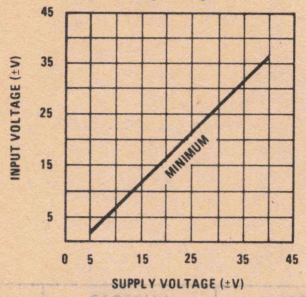

Input Bias Current

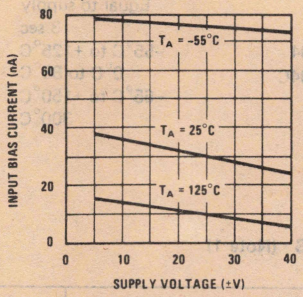

Voltage Gain

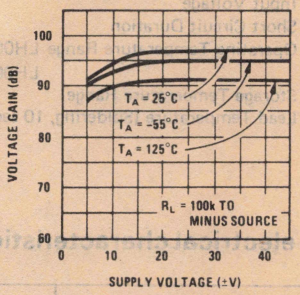

Negative Supply Current

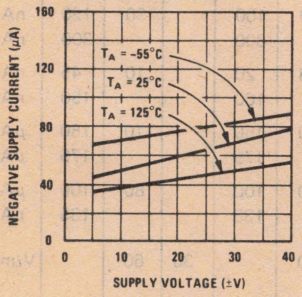

Positive Supply Current

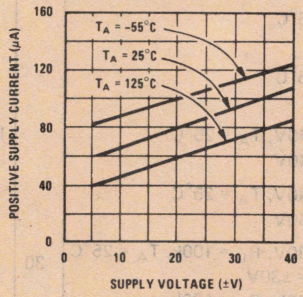

Output Voltage

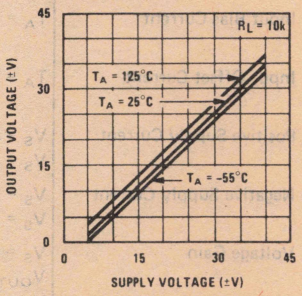

Open Loop Frequency Response

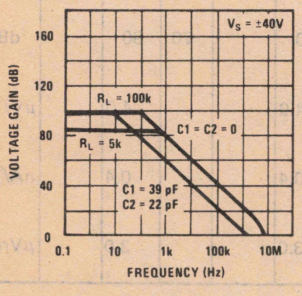

Large Signal Frequency Response

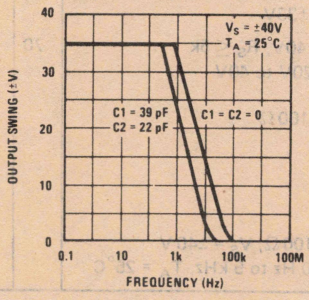

Package Power Dissipation

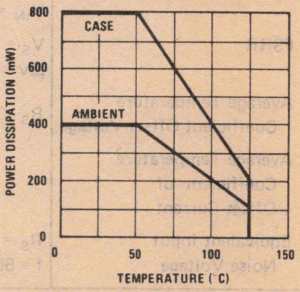

National Semiconductor

Amplifiers

LH0005/LH0005A Operational Amplifier

general description

The LH0005/LH0005A is a hybrid integrated circuit operational amplifier employing thick film resistors and discrete silicon semiconductors in its design. The select matching of the input pairs of transistors results in low input bias currents and a very low input offset current, both of which exhibit excellent temperature tracking. In addition, the device features:

- Very high output current capability: ±50 mA into a 100 ohm load
- Low standby power dissipation: typically 60 mW at ±12V
- High input resistance: typically 2M at 25°C
- Full operating range: −55°C to +125°C
- Good high frequency response: unity gain at 30 MHz

With no external roll-off network, the amplifier is stable with a feedback ratio of 10 or greater. By adding a 200 pF capacitor between pins 9 and 10, and a 200 ohm resistor in series with a 75 pF capacitor from pin 4 to ground, the amplifier is stable to unity gain. The unity gain loop phase margin with the above compensation is typically 70 degrees. With a gain of 10 and no compensation the loop phase margin is typically 50 degrees.

schematic and connection diagrams

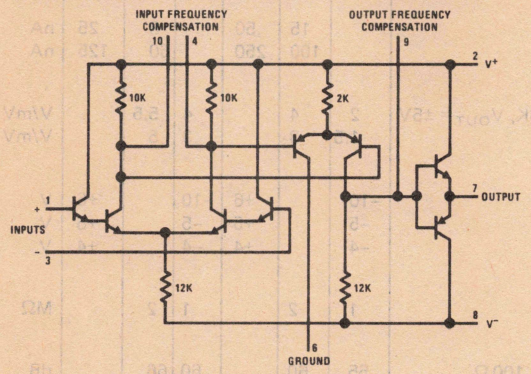

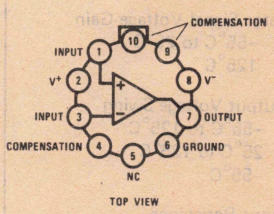

Order Number LH0005H or LH0005AH
See Package H10D

typical applications

Voltage Follower

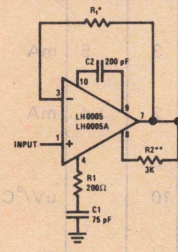

*May be zero or equal to the input resistance for minimum offset.
**To minimize crossover distortion at higher frequencies. May be omitted for low frequency application or selected to suit design requirements

Offset Balancing Circuit

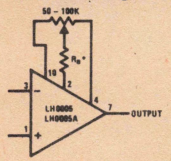

*Typical value, R_B = 100K. R_B may be increased for greater sensitivity with reduction in range.

*Previously called NH0005/NH0005A

External Current Limiting

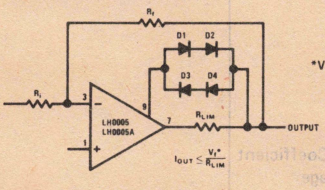

*V_f = Average forward voltage drop of diodes D_1 to D_4 at approx. 1 mA.

For continuous short circuit protection (V_S = ±12V, −55°C ≤ T_A ≤ +100°C) R_{LIM} ≥ 50Ω

Integrator with Bias Current Compensation

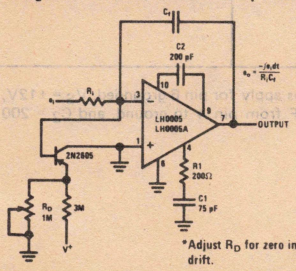

*Adjust R_D for zero integration drift.

absolute maximum ratings

Supply Voltage	±20V
Power Dissipation (see Curve)	400 mW
Differential Input Voltage	±15V
Input Voltage	Equal to supply voltages
Peak Load Current	±100 mA
Storage Temperature Range	−65°C to +150°C
Operating Temperature Range	−55°C to +125°C
Lead Temperature (Soldering, 10 sec)	300°C

electrical characteristics (Note 1)

PARAMETER	CONDITIONS	LH0005			LH0005A			UNITS
		MIN	TYP	MAX	MIN	TYP	MAX	
Input Offset Voltage								
25°C	$R_S \leq 100\,\Omega$		5	10		1	3	mV
−55°C, 125°C	$R_S \leq 100\,\Omega$			10			4	mV
Input Offset Current								
25°C to 125°C			10	20		2	5	nA
−55°C			25	75		10	25	nA
Input Bias Current								
25°C to 125°C			15	50		8	25	nA
−55°C			100	250		60	125	nA
Large Signal Voltage Gain								
−55°C to 25°C	R_L = 10K, R2 = 3K, V_{OUT} = ±5V	2	4		4	5.5		V/mV
125°C		1.5	3		3	5		V/mV
Output Voltage Swing								
−55°C to 125°C	R_L = 10 kΩ	−10		+6	−10		+6	V
25°C to 125°C	R_L = 100Ω	−5		+5	−5		+5	V
−55°C	R_L = 100Ω	−4		+4	−4		+4	V
Input Resistance								
25°C		1	2		1	2		MΩ
Common Mode Rejection Ratio								
25°C	V_{IN} = ±4V, RS ≤ 100 Ω	55	60		60	66		dB
Power Supply Rejection Ratio								
25°C		55	60		60	66		dB
Supply Current (+)								
−55°C to 125°C			3	5		3	5	mA
Supply Current (−)								
−55°C to 125°C			2	4		2	4	mA
Average Temperature Coefficient of Input Offset Voltage								
−55°C to 125°C	$R_S \leq 100\,\Omega$		20			10		uV/°C
Output Resistance								
25°C			70			70		Ω

Note 1: These specifications apply for pin 6 grounded, V_S = ±12V, with Resistor R_1 = 200Ω in series with Capacitor C_1 = 75 pF from pin 4 to ground, and C_2 = 200 pF between pins 9 and 10 unless otherwise specified.

guaranteed performance characteristics

Supply Current

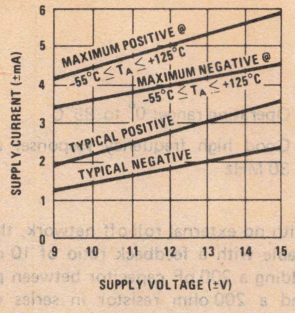

Maximum Power Dissipation

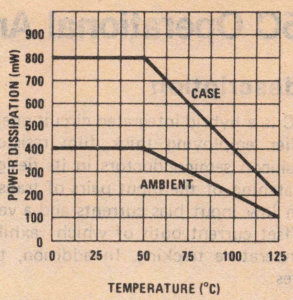

typical performance characteristics

Input Bias Current

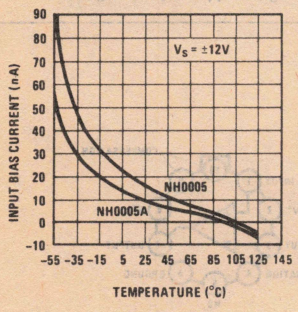

Voltage Gain

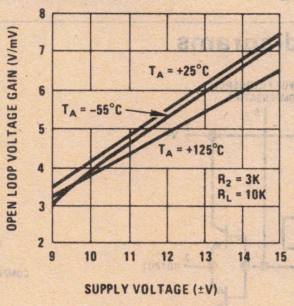

Loaded Output Voltage Swing

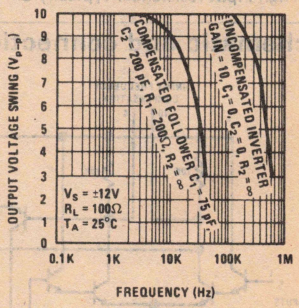

DC Output Voltage Swing

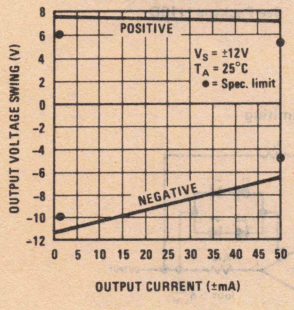

Positive Output Voltage Swing

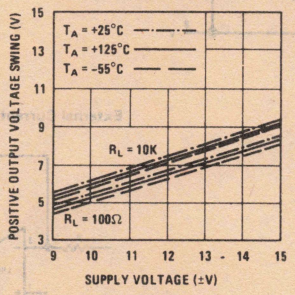

Negative Output Voltage Swing

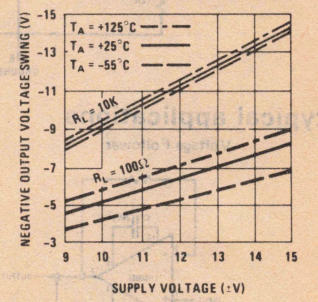

Frequency Response

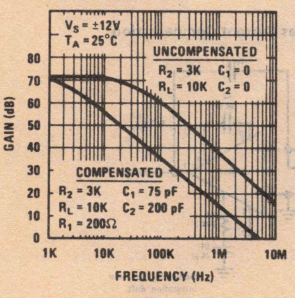

Open Loop Gain vs Excess Phase

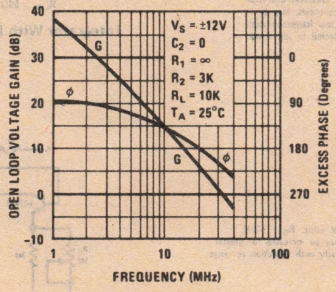

Inverting Pulse Response

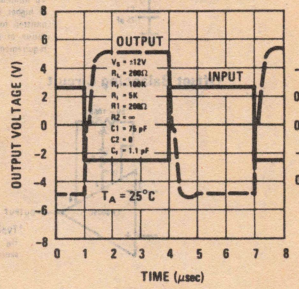

National Semiconductor

LH0005C Operational Amplifier

general description

The LH0005C is a hybrid integrated circuit operational amplifier employing thick film resistors and discrete silicon semiconductors in its design. The select matching of the input pairs of transistors results in low input bias currents and a very low input offset current both of which exhibit excellent temperature tracking. In addition, the device features:

- Very high output current capability: ±40 mA into a 100 ohm load
- Low standby power dissipation: typically 60 mW at ±12V
- High input resistance: typically 2M at 25°C
- Operating range: 0° to 85°C
- Good high frequency response: unity gain at 30 MHz

With no external roll-off network, the amplifier is stable with a feedback ratio of 10 or greater. By adding a 200 pF capacitor between pins 9 and 10, and a 200 ohm resistor in series with a 75 pF capacitor from pin 4 to ground, the amplifier is stable to unity gain. The unity gain loop phase margin with the above compensation is typically 70 degrees. With a gain of 10 and no compensation the loop phase margin is typically 50 degrees.

schematic and connection diagrams

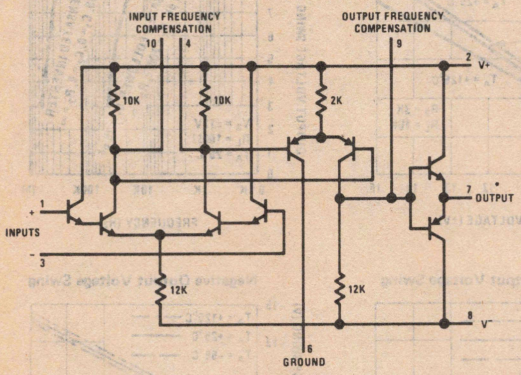

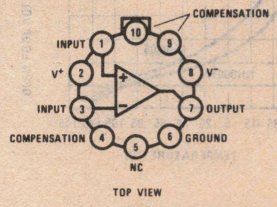

Order Number LH0005CH
See Package H10D

typical applications

Voltage Follower

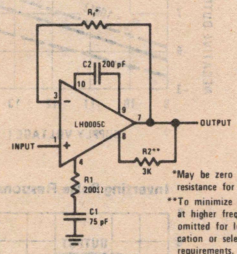

*May be zero or equal to the input resistance for minimum offset.
**To minimize crossover distortion at higher frequencies. May be omitted for low frequency application or selected to suit design requirements.

Offset Balancing Circuit

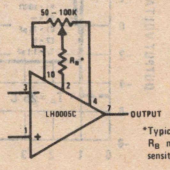

*Typical value, R_B = 100K, R_B may be increased for greater sensitivity with reduction in range.

External Current Limiting

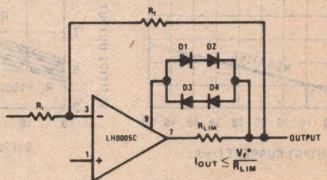

$I_{OUT} \leq \frac{V_F^*}{R_{LIM}}$

For continuous short circuit protection (V_S = ±12V, 0°C ≤ T_A ≤ 70°C R_{LIM} ≥ 50Ω

*V_f = Average forward voltage drop of diodes D_1 to D_4 at approx. 1 mA

Integrator With Bias Current Compensation

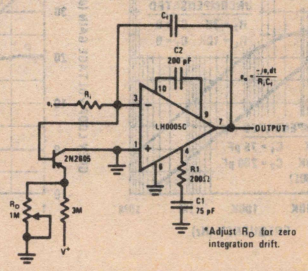

*Adjust R_O for zero integration drift.

*Previously called NH0005C

absolute maximum ratings

Supply Voltage	±20V
Power Dissipation (see Curve)	400 mW
Differential Input Voltage	±15V
Input Voltage	Equal to supply voltages
Peak Load Current	±100 mA
Storage Temperature Range	−55°C to +125°C
Operating Temperature Range	0°C to 85°C
Lead Temperature (soldering, 10 sec)	300°C

electrical characteristics

PARAMETER	CONDITIONS	LH0005C MIN	LH0005C TYP (Note 2)	LH0005C MAX	UNITS
Input Offset Voltage	$R_S \leq 100\,\Omega$		3	10	mV
Input Offset Current			5	25	nA
Input Bias Current			20	100	nA
Large Signal Voltage Gain	R_L = 10K, R2 = 3K, V_{OUT} = ±5V	2	5		V/mV
Output Voltage Swing	R_L = 10 kΩ	−10		+6	V
	R_L = 100Ω	−4	±6	+4	V
Input Resistance	T_A = 25°C	0.5	2		MΩ
Common Mode Rejection Ratio	V_{IN} = ±4V, $R_S \leq 100\,\Omega$, T_A = 25°C	50	60		dB
Power Supply Rejection Ratio	T_A = 25°C	50	60		dB
Supply Current (+)			3	5	mA
Supply Current (−)			2	4	mA

Note 1: These specifications apply for pin 6 grounded, V_S = ±12V, with Resistor R1 = 200Ω in series with Capacitor C1 = 75 pF from pin 4 to ground, and C2 = 200 pF between pins 9 and 10, over the temperature range of 0°C to +85°C unless otherwise specified.

Note 2: Typical values are for 25°C only.

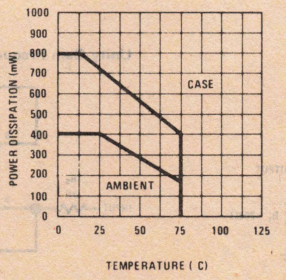

Maximum Power Dissipation

National Semiconductor

LH0020/LH0020C High Gain Operational Amplifier

general description

The LH0020/LH0020C is a general purpose operational amplifier designed to source and sink 50 mA output currents. In addition to its high output capability, the LH0020/LH0020C exhibits excellent open loop gain, typically in excess of 100 dB. The parameters of the LH0020 are guaranteed over the temperature range of −55°C to +125°C and $\pm 5V \leqslant V_S \leqslant \pm 22V$, while those of the LH0020C are guaranteed over the temperature range of 0°C to 85°C and $\leq \pm 5V \leq V_S \leq \pm 18V$. Additional features include:

- Low offset voltage typically 1.0 mV at 25°C over the entire common mode voltage range.
- Low offset current typically 10 nA at 25°C for the LH0020 and 30 nA for the LH0020C.
- Offset voltage is adjustable to zero with a single potentiometer.
- ±14V, 50 mA output capability.

Output current capability, excellent input characteristics, and large open loop gain make the LH0020/LH0020C suitable for application in a wide variety of applications from precision dc power supplies to precision medium power comparator.

schematic and connection diagrams

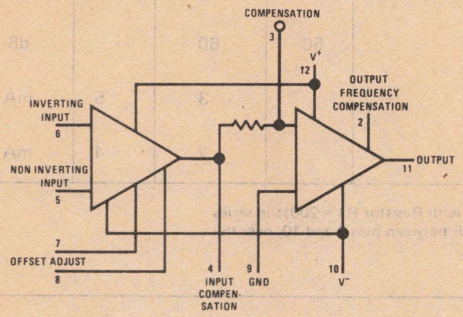

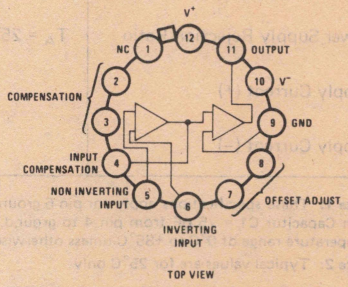

Order Number LH0020G or LH0020CG
See Package H12B

typical applications

Offset Adjustment

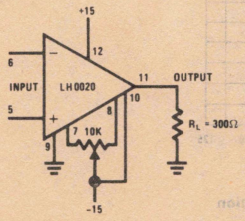

Unity Gain Frequency Compensation

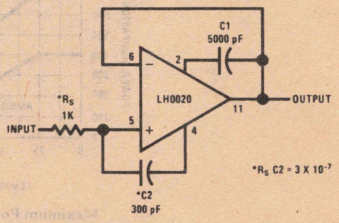

*Previously called NH0020/NH0020C

absolute maximum ratings

Supply Voltage		±22V
Power Dissipation		1.5W
Differential Input Voltage		±30V
Input Voltage (Note 1)		±15V
Output Short Circuit Duration		Continuous
Operating Temperature Range	LH0020	−55°C to +125°C
	LH0020C	0°C to 85°C
Storage Temperature		−65°C to +150°C
Lead Temperature (Soldering, 10 sec)		300°C

electrical characteristics

PARAMETER	CONDITIONS	LH0020				LH0020C				UNITS
		TEMP °C	MIN	TYP	MAX	TEMP °C	MIN	TYP	MAX	
Input Offset Voltage	$R_S \leq 100\Omega$	25		1.0	2.5	25		1.0	6.0	mV
		−55 to +125		2.0	4.0	0 to 85		3.0	7.5	mV
Input Offset Current		25		10	50	25		30	200	nA
		−55 to +125			100	0 to 85			300	nA
Input Bias Current		25		60	250	25		200	500	nA
		−55 to +125			500	0 to 85			800	nA
Supply Current	$V_S = \pm 15V$	25		3.5	5.0	25		3.6	6.0	mA
Input Resistance		25	0.6	1.0		25	0.3	1.0		MΩ
Large Signal Voltage Gain	$V_S = \pm 15V, R_L = 300\Omega, V_O = \pm 10V$	25	100	300		25	50	150		V/mV
	$V_S = \pm 15V, R_L = 300\Omega, V_O = \pm 10V$	−55 to +125	50			0 to 85	30			V/mV
Output Voltage Swing	$V_S = \pm 15V, R_L = 300\Omega$	25	14.2	14.5		25	14.0	14.2		V
		−55 to +125	14.0			0 to 85	13.5			V
Output Short Circuit Current	$V_S = \pm 15V$, $R_L = 0\Omega$	25		100	130	25	25	120	140	mA
Input Voltage Range	$V_S = \pm 15V$	−55 to +125	±12			0 to 85	±12			V
										V
Common Mode Rejection Ratio	$R_S \leq 100\Omega$	−55 to +125	90	96		0 to 85	90	96		dB
Power Supply Rejection Ratio	$R_S \leq 100\Omega$	−55 to +125	90	96		0 to 85	90	96		dB

Note 1: For supply voltages less than ±15V, the absolute maximum input voltage is equal to the supply voltage.

Note 2: These specifications apply for $\pm 5V \leq V_S \leq \pm 22V$ for the LH0020, $\pm 5V \leq V_S \leq \pm 18V$ for the LH0020C, pin 9 grounded, and a 5000 pF capacitor between pins 2 and 3, unless otherwise specified.

National Semiconductor

LH0021/LH0021C 1.0 Amp Power Operational Amplifier
LH0041/LH0041C 0.2 Amp Power Operational Amplifier

general description

The LH0021/LH0021C and LH0041/LH0041C are general purpose operational amplifiers capable of delivering large output currents not usually associated with conventional IC Op Amps. The LH0021 will provide output currents in excess of one ampere at voltage levels of ±12V; the LH0041 delivers currents of 200 mA at voltage levels closely approaching the available power supplies. In addition, both the inputs and outputs are protected against overload. The devices are compensated with a single external capacitor and are free of any unusual oscillation or latch-up problems.

features

- Output current — 1.0 Amp (LH0021), 0.2 Amp (LH0041)
- Output voltage swing — ±12V into 10Ω (LH0021), ±14V into 100Ω (LH0041)
- Wide full power bandwidth — 15 kHz
- Low standby power — 100 mW at ±15V
- Low input offset voltage and current — 1 mV and 20 nA
- High slew rate — 3.0V/μs
- High open loop gain — 100 dB

The excellent input characteristics and high output capability of the LH0021 make it an ideal choice for power applications such as DC servos, capstan drivers, deflection yoke drivers, and programmable power supplies.

The LH0041 is particularly suited for applications such as torque driver for inertial guidance systems, diddle yoke driver for alpha-numeric CRT displays, cable drivers, and programmable power supplies for automatic test equipment.

The LH0021 is supplied in a 8 pin TO-3 package rated at 20 watts with suitable heatsink. The LH0041 is supplied in both 12 pin TO-8 (2.5 watts with clip on heatsink) and a power 8 pin ceramic DIP (2 watts with suitable heatsink). The LH0021 and LH0041 are guaranteed over the temperature range of −55°C to +125°C while the LH0021C and LH0041C are guaranteed from −25°C to +85°C

schematic and connection diagrams

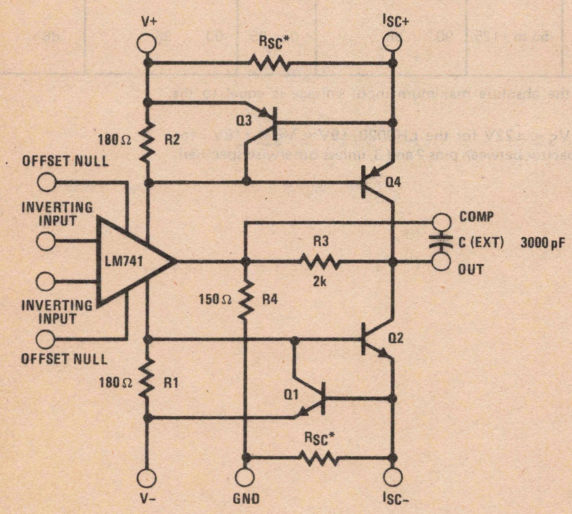

*RSC external on "G" and "K" packages. RSC internal on "J" package. Offset Null connections available only on "G" package.

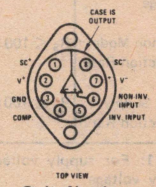

Order Number
LH0021K or LH0021CK
See Package K08A

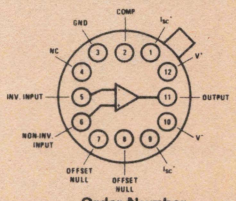

Order Number
LH0041G or LH0041CG
See Package H12B

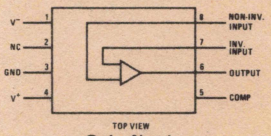

Order Number
LH0041CJ
See Package HY08A

absolute maximum ratings

Supply Voltage		±18V
Power Dissipation		See curves
Differential Input Voltage		±30V
Input Voltage (Note 1)		±15V
Peak Output Current (Note 2)	LH0021/LH0021C	2.0 Amps
	LH0041/LH0041C	0.5 Amps
Output Short Circuit Duration (Note 3)		Continuous
Operating Temperature Range	LH0021/LH0041	−55°C to +125°C
	LH0021C/LH0041C	−25°C to +85°C
Storage Temperature Range		−65°C to +150°C
Lead Temperature (Soldering, 10 sec)		300°C

dc electrical characteristics for LH0021/LH0021C (Note 4)

PARAMETER	CONDITIONS	LIMITS						UNITS
		LH0021			LH0021C			
		MIN	TYP	MAX	MIN	TYP	MAX	
Input Offset Voltage	$R_S \leq 100\Omega$, $T_C = 25°C$		1.0	3.0		3.0	6.0	mV
	$R_S \leq 100\Omega$			5.0			7.5	mV
Voltage Drift with Temperature	$R_S \leq 100\Omega$		3	25		5	30	μV/°C
Offset Voltage Drift with Time			5			5		μV/week
Offset Voltage Change with Output Power			5	15		5	20	μV/watt
Input Offset Current	$T_C = 25°C$		30	100		50	200	nA
				300			500	nA
Offset Current Drift with Temperature			0.1	1.0		0.2	1.0	nA/°C
Offset Current Drift with Time			2			2		nA/week
Input Bias Current	$T_C = 25°C$		100	300		200	500	nA
				1.0			1.0	μA
Input Resistance	$T_C = 25°C$	0.3	1.0		0.3	1.0		MΩ
Input Capacitance			3			3		pF
Common Mode Rejection Ratio	$R_S \leq 100\Omega$, $\Delta V_{CM} = \pm 10V$	70	90		70	90		dB
Input Voltage Range	$V_S = \pm 15V$	±12			±12			V
Power Supply Rejection Ratio	$R_S \leq 100\Omega$, $\Delta V_S = \pm 10V$	80	96		70	90		dB
Voltage Gain	$V_S = \pm 15V$, $V_O = \pm 10V$, $R_L = 1\ k\Omega$, $T_C = 25°C$,	100	200		100	200		V/mV
	$V_S = \pm 15V$, $V_O = \pm 10V$, $R_L = 100\Omega$,	25			20			V/mV
Output Voltage Swing	$V_S = \pm 15V$, $R_L = 100\Omega$	±13.5	14		±13	±14		V
	$V_S = \pm 15V$, $R_L = 10\Omega$, $T_C = 25°C$	±11.0	±12		±10	±12		V
Output Short Circuit Current	$V_S = \pm 15V$, $T_C = 25°C$, $R_{SC} = 0.5\Omega$	0.8	1.2	1.6	0.8	1.2	1.6	Amps
Power Supply Current	$V_S = \pm 15V$, $V_{OUT} = 0$		2.5	3.5		3.0	4.0	mA
Power Consumption	$V_S = \pm 15V$, $V_{OUT} = 0$		75	105		90	120	mW

ac electrical characteristics for LH0021/LH0021C ($T_A = 25°C$, $V_S = \pm 15V$, $C_C = 3000$ pF)

Slew Rate	$A_V = +1$, $R_L = 100\Omega$	0.8	3.0		1.0	3.0		V/μs
Power Bandwidth	$R_L = 100\Omega$		20			20		kHz
Small Signal Transient Response			0.3	1.0		0.3	1.5	μs
Small Signal Overshoot			5	20		10	30	%
Settling Time (0.1%)	$\Delta V_{IN} = 10V$, $A_V = +1$		4			4		μs
Overload Recovery Time			3			3		μs
Harmonic Distortion	f = 1 kHz, $P_O = 0.5W$		0.2			0.2		%
Input Noise Voltage	$R_S = 50\Omega$, B.W. = 10 Hz to 10 kHz		5			5		μV rms
Input Noise Current	B.W. = 10 Hz to 10 kHz		0.05			0.05		nA rms

dc electrical characteristics for LH0041/LH0041C (Note 4)

PARAMETER	CONDITIONS	LIMITS						UNITS
		LH0041			LH0041C			
		MIN	TYP	MAX	MIN	TYP	MAX	
Input Offset Voltage	$R_S \leq 100\Omega$, $T_A = 25°C$		1.0	3.0		3.0	6.0	mV
	$R_S \leq 100\Omega$			5.0			7.5	mV
Voltage Drift with Temperature	$R_S \leq 100\Omega$		3			5		μV/°C
Offset Voltage Drift with Time			5			5		μV/week
Offset Voltage Change with Output Power			15			15		μV/watt
Offset Voltage Adjustment Range	(Note 5)		20			20		mV
Input Offset Current	$T_A = 25°C$		30	100		50	200	nA
				300			500	nA
Offset Current Drift with Temperature			0.1	1.0		0.2	1.0	nA/°C
Offset Current Drift with Time			2			2		nA/week
Input Bias Current	$T_A = 25°C$		100	300		200	500	nA
				1.0			1.0	μA
Input Resistance	$T_A = 25°C$	0.3	1.0		0.3	1.0		MΩ
Input Capacitance			3			3		pF
Common Mode Rejection Ratio	$R_S \leq 100\Omega$, $\Delta V_{CM} = \pm 10V$	70	90		70	90		dB
Input Voltage Range	$V_S = \pm 15V$	±12			±12			V
Power Supply Rejection Ratio	$R_S \leq 100\Omega$, $\Delta V_S = \pm 10V$	80	96		70	90		dB
Voltage Gain	$V_S = \pm 15V$, $V_O = \pm 10V$							
	$R_L = 1\ k\Omega$, $T_A = 25°C$	100	200		100	200		V/mV
	$V_S = \pm 15V$, $V_O = \pm 10V$							
	$R_L = 100\Omega$	25			20			V/mV
Output Voltage Swing	$V_S = \pm 15V$, $R_L = 100\Omega$	±13.0	14.0		±13.0	±14.0		V
Output Short Circuit Current	$V_S = \pm 15V$, $T_A = 25°C$ (Note 6)		200	300		200	300	mA
Power Supply Current	$V_S = \pm 15V$, $V_{OUT} = 0$		2.5	3.5		3.0	4.0	mA
Power Consumption	$V_S = \pm 15V$, $V_{OUT} = 0$		75	105		90	120	mW

ac electrical characteristics for LH0041/LH0041C ($T_A = 25°C$, $V_S = \pm 15V$, $C_C = 3000$ pF)

Slew Rate	$A_V = +1$, $R_L = 100\Omega$	1.5	3.0		1.0	3.0		V/μs
Power Bandwidth	$R_L = 100\Omega$		20			20		kHz
Small Signal Transient Response			0.3	1.0		0.3	1.5	μs
Small Signal Overshoot			5	20		10	30	%
Settling Time (0.1%)	$\Delta V_{IN} = 10V$, $A_V = +1$		4			4		μs
Overload Recovery Time			3			3		μs
Harmonic Distortion	f = 1 kHz, $P_O = 0.5W$		0.2			0.2		%
Input Noise Voltage	$R_S = 50\Omega$, B.W. = 10 Hz to 10 kHz		5			5		μV/rms
Input Noise Current	B.W. = 10 Hz to 10 kHz		0.05			0.05		nA/rms

Note 1: Rating applies for supply voltages above ±15V. For supplies less than ±15V, rating is equal to supply voltage.

Note 2: Rating applies for LH0041G and LH0021K with $R_{SC} = 0\Omega$.

Note 3: Rating applies as long as package power rating is not exceeded.

Note 4: Specifications apply for $\pm 5V \leq V_S \pm 18V$, and $-55°C \leq T_C = \leq 125°C$ for LH0021K and LH0041G, and $-25°C \leq T_C \leq +85°C$ for LH0021CK, LH0041CG and LH0041CJ unless otherwise specified. Typical values are for 25°C only.

Note 5: TO-8 "G" packages only.

Note 6: Rating applies for "J" DIP package and for TO-8 "G" package with $R_{SC} = 3.3$ ohms.

typical performance characteristics

Power Derating-LH0021

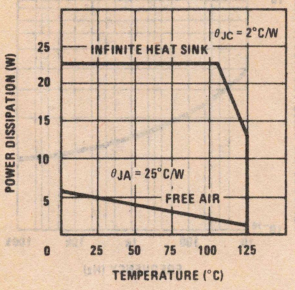

Safe Operating Area — LH0021

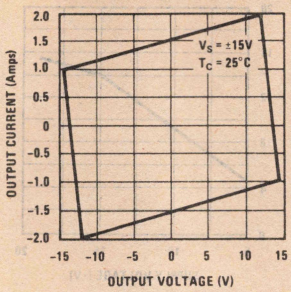

Package Power Dissipation LH0041/LH0041C

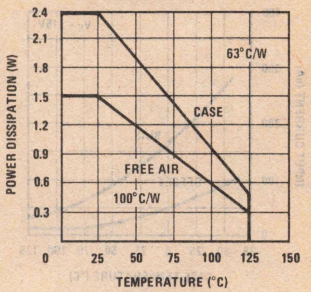

Output Voltage Swing

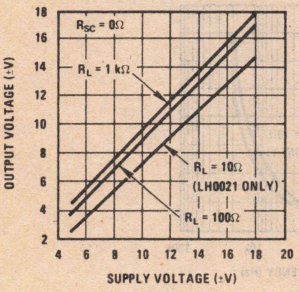

Open Loop Frequency Response

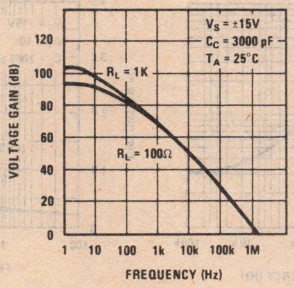

Large Signal Frequency Response

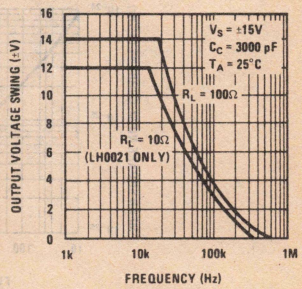

Voltage Follower Pulse Response

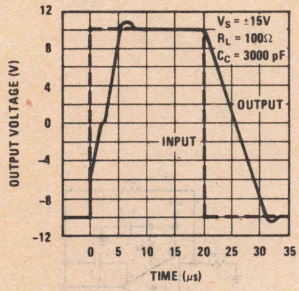

No Load Supply Current

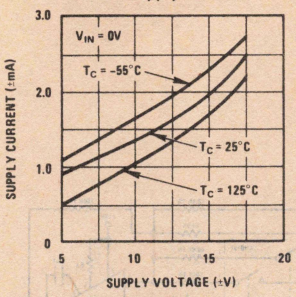

Short Circuit Current vs Temperature LH0021/LH0021C

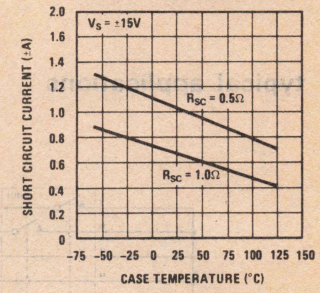

Short Circuit Current vs Temperature LH0041/LH0041C

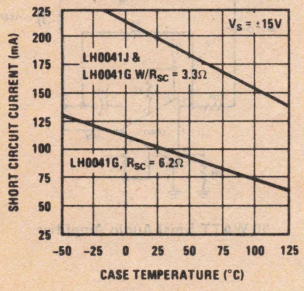

Input Bias Current

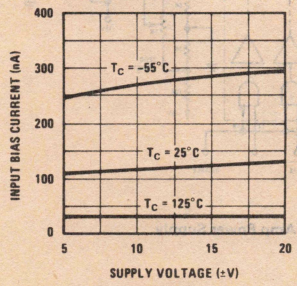

Voltage Gain

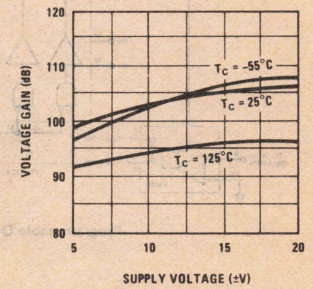

typical performance characteristics (con't)

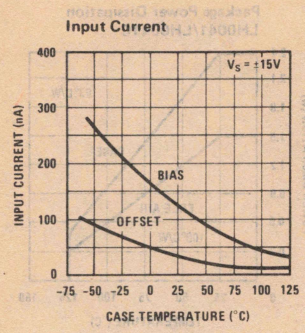

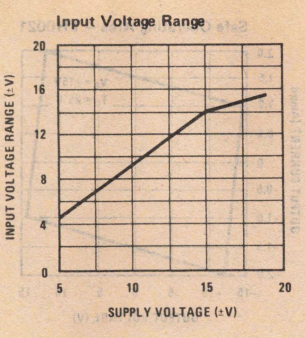

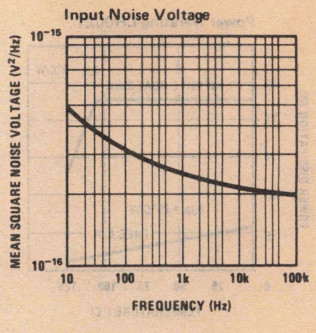

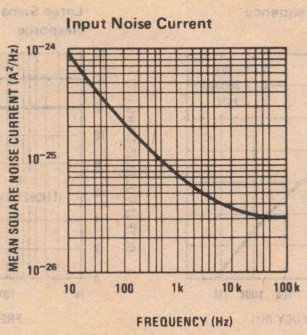

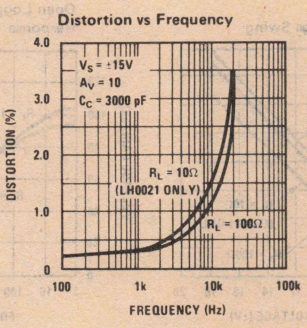

typical applications

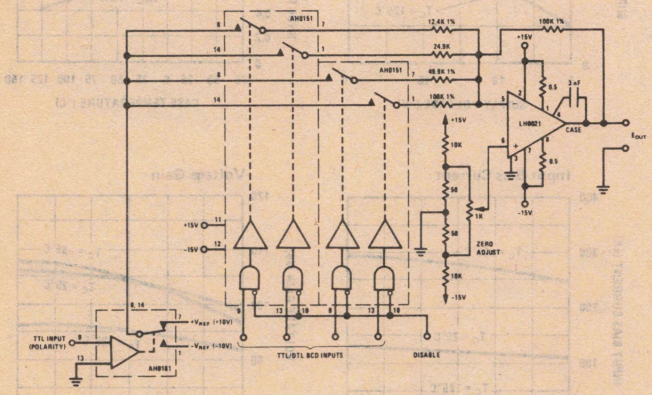

Programmable One Amp Power Supply

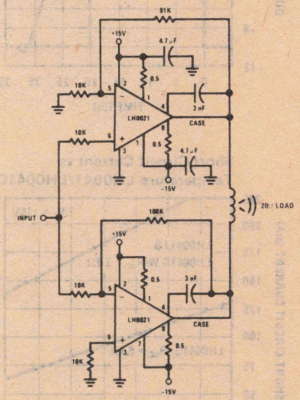

10 WATT (rms) Audio Amplifier

typical applications (con't)

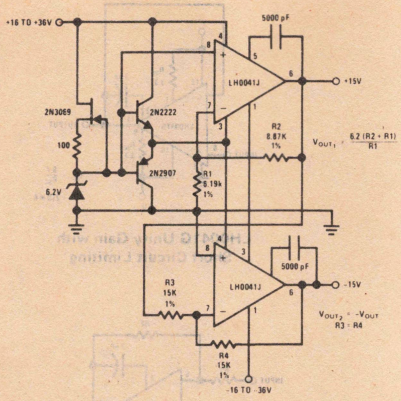

Dual Tracking One Amp Power Supply

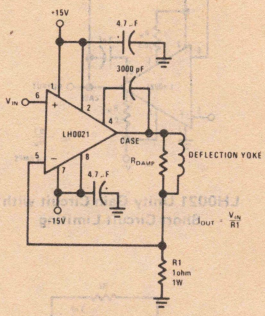

CRT Deflection Yoke Driver

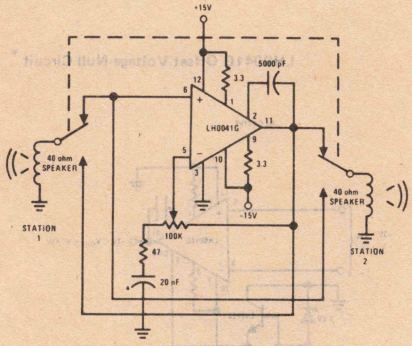

Two Way Intercom

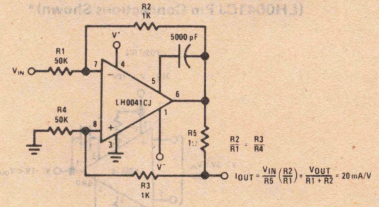

Programmable High Current Source/Sink

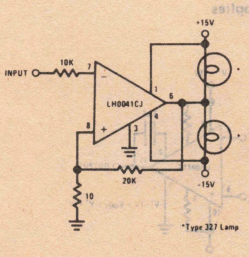

Power Comparator

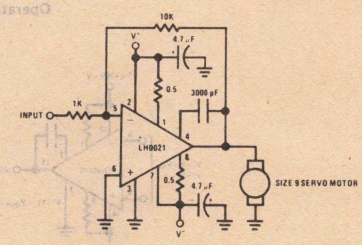

DC Servo Amplifier

auxiliary circuits

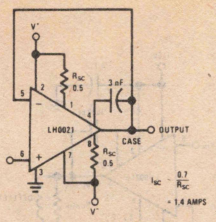

LH0021 Unity Gain Circuit with Short Circuit Limiting

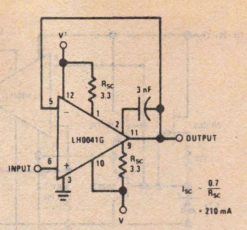

LH0041G Unity Gain with Short Circuit Limiting

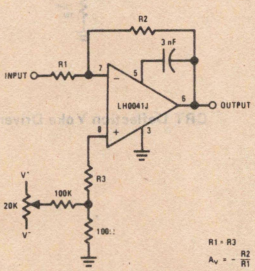

LH0041/LH0021 Offset Voltage Null Circuit (LH0041CJ Pin Connections Shown)*

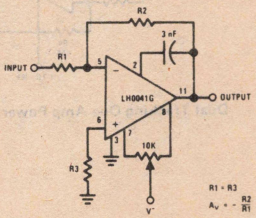

LH0041G Offset Voltage Null Circuit*

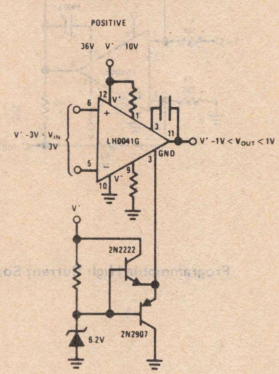

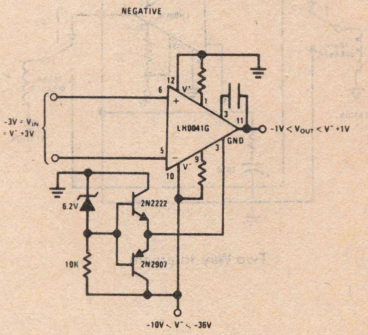

Operation from Single Supplies

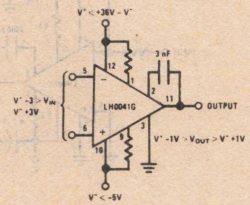

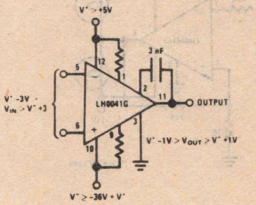

Operation from Non-Symmetrical Supplies

*For additional offset null circuit techniques see National Linear Applications Handbook.

National Semiconductor

Amplifiers

LH0022/LH0022C High Performance FET Op Amp
LH0042/LH0042C Low Cost FET Op Amp
LH0052/LH0052C Precision FET Op Amp

general description

The LH0022/LH0042/LH0052 are a family of FET input operational amplifiers with very closely matched input characteristics, very high input impedance, and ultra-low input currents with no compromise in noise, common mode rejection ratio, open loop gain, or slew rate. The internally laser nulled LH0052 offers 500 microvolts maximum offset and 5 μV/°C offset drift. Input offset current is less than 500 femtoamps at room temperature and 100 pA maximum at 125°C. The LH0022 and LH0042 are not internally nulled but offer comparable matching characteristics. All devices in the family are internally compensated and are free of latch-up and unusual oscillation problems. The devices may be offset nulled with a single 10k trimpot with neglible effect in CMRR.

The LH0022, LH0042 and LH0052 are specified for operation over the −55°C to +125°C military temperature range. The LH0022C, LH0042C and LH0052C are specified for operation over the −25°C to +85°C temperature range.

features

- Low input offset current—500 femtoamps max. (LH0052)
- Low input offset drift—5μV/°C max (LH0052)
- Low input offset voltage — 100 microvolts-typ.
- High open loop gain — 100 dB typ.
- Excellent slew rate — 3.0 V/μs typ.
- Internal 6 dB/octave frequency compensation
- Pin compatible with standard IC op amps (TO-5 package)

The LH0022/LH0042/LH0052 family of IC op amps are intended to fulfill a wide variety of applications for process control, medical instrumentation, and other systems requiring very low input currents and tightly matched input offsets. The LH0052 is particularly suited for long term high accuracy integrators and high accuracy sample and hold buffer amplifiers. The LH0022 and LH0042 provide low cost high performance for such applications as electrometer and photocell amplification, pico-ammeters, and high input impedance buffers.

Special electrical parameter selection and custom built circuits are available on special request.

For additional application information and information on other National operational amplifiers, see *Available Linear Applications Literature.*

schematic and connection diagrams

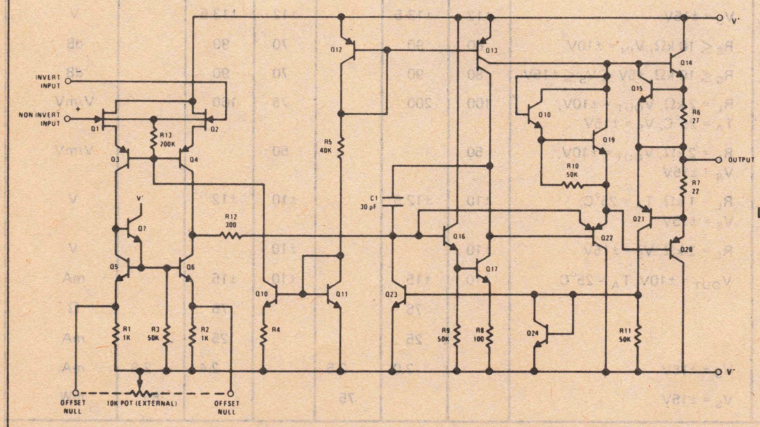

Dual-In-Line Package

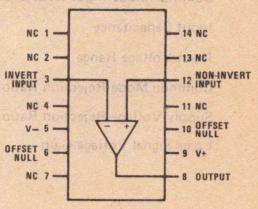

TOP VIEW

Order Number LH0022D, LH0022CD, LH0042D, LH0042CD, LH0052D or LH0052CD
See Package D14E

Metal Can Package

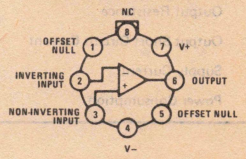

TOP VIEW

Order Number LH0022H, LH0022CH, LH0042H, LH0042CH, LH0052H or LH0052CH
See Package H08A

*Previously Called NH0022/NH0022C

absolute maximum ratings

Supply Voltage	±22V
Power Dissipation (see graph)	500 mW
Input Voltage (Note 1)	±15V
Differential Input Voltage (Note 2)	±30V
Voltage Between Offset Null and V^-	±0.5V
Short Circuit Duration	Continuous
Operating Temperature Range	
LH0022, LH0042, LH0052	−55°C to +125°C
LH0022C, LH0042C, LH0052C	−25°C to +85°C
Storage Temperature Range	−65°C to +150°C
Lead Temperature (Soldering, 10 sec)	300°C

dc electrical characteristics For LH0022/LH0022C (Note 3)

PARAMETER	CONDITIONS	LIMITS						UNITS
		LH0022			LH0022C			
		MIN	TYP	MAX	MIN	TYP	MAX	
Input Offset Voltage	$R_S \leq 100\ k\Omega$; $T_A = 25°C$, $V_S = \pm15V$		2.0	4.0		3.5	6.0	mV
	$R_S \leq 100\ k\Omega$, $V_S = \pm15V$			5.0			7.0	mV
Temperature Coefficient of Input Offset Voltage	$R_S \leq 100\ k\Omega$		5	10		5	15	μV/°C
Offset Voltage Drift with Time			3			4		μV/week
Input Offset Current	(Note 4)		0.2	2.0		1.0	5.0	pA
				2.0			0.5	nA
Temperature Coefficient of Input Offset Current			Doubles every 10°C			Doubles every 10°C		
Offset Current Drift with Time			0.1			0.1		pA/week
Input Bias Current	(Note 4)		5	10		10	25	pA
				10			2.5	nA
Temperature Coefficient of Input Bias Current			Doubles every 10°C			Doubles every 10°C		
Differential Input Resistance			10^{12}			10^{12}		Ω
Common Mode Input Resistance			10^{12}			10^{12}		Ω
Input Capacitance			4.0			4.0		pF
Input Voltage Range	$V_S = \pm15V$	±12	±13.5		±12	±13.5		V
Common Mode Rejection Ratio	$R_S \leq 10\ k\Omega$, $V_{IN} = \pm10V$	80	90		70	90		dB
Supply Voltage Rejection Ratio	$R_S \leq 10\ k\Omega$, $\pm5V \leq V_S \leq \pm15V$	80	90		70	90		dB
Large Signal Voltage Gain	$R_L = 2\ k\Omega$, $V_{OUT} = \pm10V$, $T_A = 25°C$, $V_S = \pm15V$	100	200		75	160		V/mV
	$R_L = 2\ k\Omega$, $V_{OUT} = \pm10V$, $V_S = \pm15V$	50			50			V/mV
Output Voltage Swing	$R_L = 1\ k\Omega$, $T_A = 25°C$, $V_S = \pm15V$	±10	±12.5		±10	±12		V
	$R_L = 2\ k\Omega$, $V_S = \pm15V$	±10			±10			V
Output Current Swing	$V_{OUT} = \pm10V$, $T_A = 25°C$	±10	±15		±10	±15		mA
Output Resistance			75			75		Ω
Output Short Circuit Current			25			25		mA
Supply Current	$V_S = \pm15V$		2.0	2.5		2.4	2.8	mA
Power Consumption	$V_S = \pm15V$			75			85	mW

dc electrical characteristics for LH0042/LH0042C (Note 3)

(V_S = ±15V; unless otherwise specified)

PARAMETER	CONDITIONS	LIMITS						UNITS
		LH0042			LH0042C			
		MIN	TYP	MAX	MIN	TYP	MAX	
Input Offset Voltage	$R_S \leq 100\ k\Omega$		5.0	20		6.0	20	mV
Temperature Coefficient of Input Offset Voltage	$R_S \leq 100\ k\Omega$		5			10		μV/°C
Offset Voltage Drift with Time			7			10		μV/week
Input Offset Current	(Note 4)		1	5		2	10	pA
Temperature Coefficient of Input Offset Current		Doubles every 10°C			Doubles every 10°C			
Offset Current Drift with Time			0.1			0.1		pA/week
Input Bias Current	(Note 4)		10	25		15	50	pA
Temperature Coefficient of Input Bias Current		Doubles every 10°C			Doubles every 10°C			
Differential Input Resistance			10^{12}			10^{12}		Ω
Common Mode Input Resistance			10^{12}			10^{12}		Ω
Input Capacitance			4.0			4.0		pF
Input Voltage Range		±12	±13.5		±12	±13.5		V
Common Mode Rejection Ratio	$R_S \leq 10\ k\Omega$, V_{IN} = ±10V	70	86		70	80		dB
Supply Voltage Rejection Ratio	$R_S \leq 10\ k\Omega$, $\pm 5V \leq V_S \leq \pm 15V$	70	86		70	80		dB
Large Signal Voltage Gain	R_L = 1 kΩ, V_{OUT} = ±10V	50	150		25	100		V/mV
Output Voltage Swing	R_L = 1 kΩ	±10	±12.5		±10	±12		V
Output Current Swing	V_{OUT} = ±10V	±10	±15		±10	±15		mA
Output Resistance			75			75		Ω
Output Short Circuit Current			20			20		mA
Supply Current			2.5	3.5		2.8	4.0	mA
Power Consumption				105			120	mW

dc electrical characteristics For LH0052/LH0052C (Note 3)

PARAMETER	CONDITIONS	LIMITS						UNITS
		LH0052			LH0052C			
		MIN	TYP	MAX	MIN	TYP	MAX	
Input Offset Voltage	$R_S < 100\ k\Omega$; V_S = ±15V, T_A = 25°C		0.1	0.5		0.2	1.0	mV
	$R_S < 100\ k\Omega$, V_S = ±15V			1.0			1.5	mV
Temperature Coefficient of Input Offset Voltage	$R_S \leq 100\ k\Omega$, V_S = ±15V		2	5		5	10	μV/°C
Offset Voltage Drift with Time			2			4		μV/week
Input Offset Current	(Note 4)		0.01	0.5		0.02	1.0	pA
				100			100	pA
Temperature Coefficient of Input Offset Current		Doubles every 10°C			Doubles every 10°C			
Offset Current Drift with Time			<0.1			<0.1		pA/week
Input Bias Current	(Note 4)		0.5	2.5		1.0	5.0	pA
				2.5			0.5	nA
Temperature Coefficient of Input Bias Current		Doubles every 10°C			Doubles every 10°C			
Differential Input Resistance			10^{12}			10^{12}		Ω
Common Mode Input Resistance			10^{12}			10^{12}		Ω
Input Capacitance			4.0			4.0		pF
Input Voltage Range	V_S = ±15V	±12	±13.5		±12	±13.5		V
Common Mode Rejection Ratio	$R_S < 10\ k\Omega$, V_{IN} = ±10V	74	90		70	90		dB
Supply Voltage Rejection Ratio	$R_S \leq 10\ k\Omega$, $\pm 5V \leq V_S \leq \pm 15V$	74	90		70	90		dB
Large Signal Voltage Gain	R_L = 2 kΩ, V_{OUT} = ±10V, V_S = ±15V, T_A = 25°C	100	200		75	160		V/mV
	R_L = 2 kΩ, V_{OUT} = ±10V, V_S = ±15V	50			50			V/mV
Output Voltage Swing	R_L = 1 kΩ, T_A = 25°C V_S = ±15V	±10	±12.5		±10	±12		V
	R_L = 2 kΩ, V_S = ±15V	±10			±10			V
Output Current Swing	V_{OUT} = ±10V, T_A = 25°C	±10	±15		±10	±15		mA
Output Resistance			75			75		Ω
Output Short Circuit Current			25			25		mA
Supply Current	V_S = ±15V		3.0	3.5		3.0	3.8	mA
Power Consumption	V_S = ±15V			105			114	mW

ac electrical characteristics For all amplifiers ($T_A = 25°C$, $V_S = \pm15V$)

PARAMETER	CONDITIONS	LIMITS						UNITS
		LH0022/42/52			LH0022C/42C/52C			
		MIN	TYP	MAX	MIN	TYP	MAX	
Slew Rate	Voltage Follower	1.5	3.0		1.0	3.0		V/μs
Large Signal Bandwidth	Voltage Follower		40			40		kHz
Small Signal Bandwidth			1.0			1.0		MHz
Rise Time			0.3	1.5		0.3	1.5	μs
Overshoot			10	30		15	40	%
Settling Time (0.1 %)	$\Delta V_{IN} = 10V$		4.5			4.5		μs
Overload Recovery			4.0			4.0		μs
Input Noise Voltage	$R_S = 10\ k\Omega$, $f_o = 10$ Hz		150			150		$nV/\sqrt{Hz}$
Input Noise Voltage	$R_S = 10\ k\Omega$, $f_o = 100$ Hz		55			55		$nV/\sqrt{Hz}$
Input Noise Voltage	$R_S = 10\ k\Omega$, $f_o = 1$ kHz		35			35		$nV/\sqrt{Hz}$
Input Noise Voltage	$R_S = 10\ k\Omega$, $f_o = 10$ kHz		30			30		$nV/\sqrt{Hz}$
Input Noise Voltage	BW = 10 Hz to 10 kHz, $R_S = 10\ k\Omega$		12			12		μVrms
Input Noise Current	BW = 10 Hz to 10 kHz		<.1			<.1		pArms

Note 1: For supply voltages less than ±15V, the absolute maximum input voltage is equal to the supply voltage.

Note 2: Rating applies for minimum source resistance of 10 kΩ, for source resistances less than 10 kΩ, maximum differential input voltage is ±5V.

Note 3: Unless otherwise specified, these specifications apply for $\pm5V \leq V_S \leq \pm20V$ and $-55°C \leq T_A \leq \pm125°C$ for the LH0022 and LH0052 and $-25°C \leq T_A \leq +85°C$ for the LH0022 and LH0052C Typical values are given for $T_A = 25°C$.

Note 4: Input currents are a strong function of temperature. Due to high speed testing they are specified a junction temperature $T_j = 25°C$, self heating will cause an increase in current in manual tests.

auxiliary circuits (shown for TO-5 pin out)

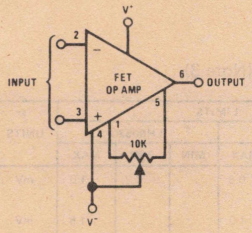

Offset Null

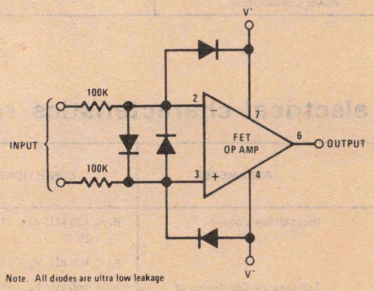

Note. All diodes are ultra low leakage

Protecting Inputs From ±150V Transients

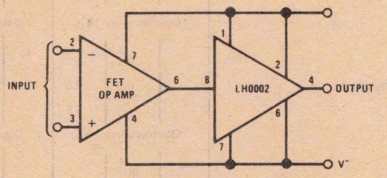

Boosting Output Drive to ±100 mA

typical applications

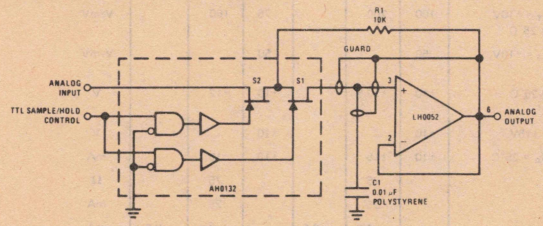

Low Drift Sample and Hold

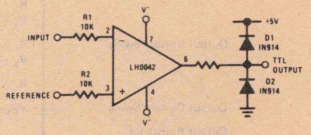

Precision Voltage Comparator

typical applications (con't)

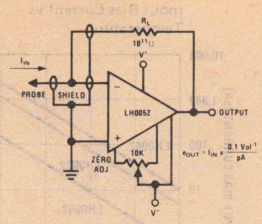

Picoamp Amplifier for pH Meters and Radiation Detectors

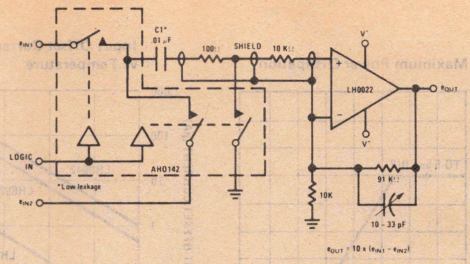

Precision Subtractor for Automatic Test Gear

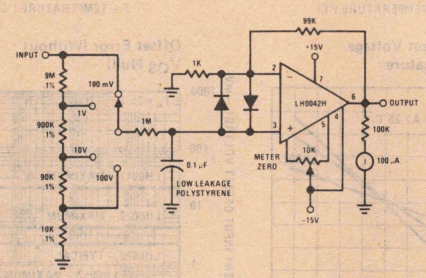

Sensitive Low Cost "VTVM"

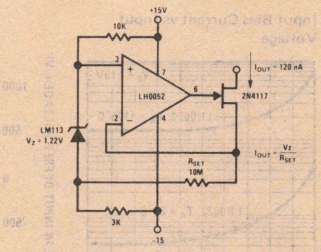

Ultra Low Level Current Source

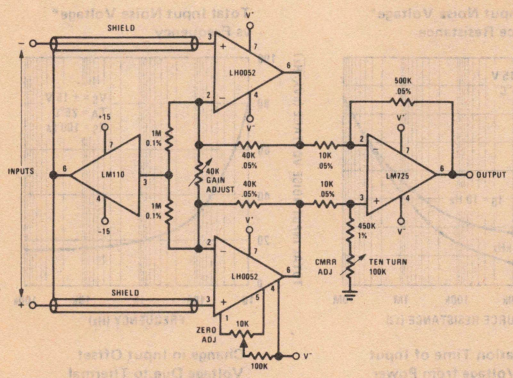

True Instrumentation Amplifier

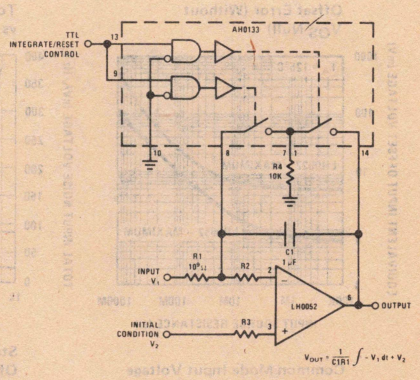

Precision Integrator

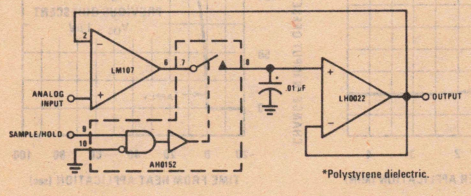

*Polystyrene dielectric.

Precision Sample and Hold

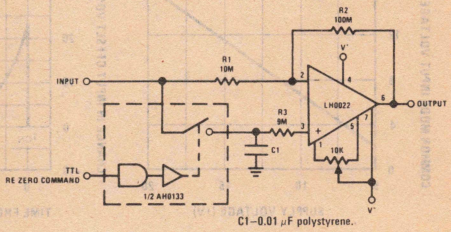

C1–0.01 μF polystyrene.

Re-Zeroing Amplifier

typical performance characteristics

Maximum Power Dissipation

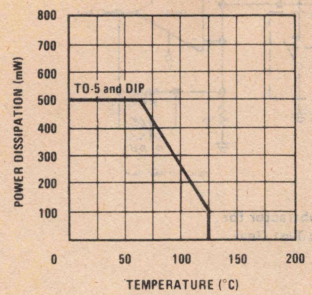

Input Offset Current vs Temperature

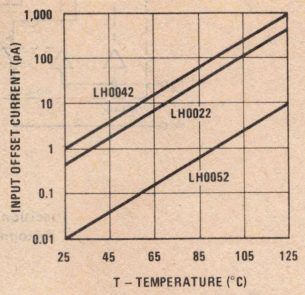

Input Bias Current vs Temperature

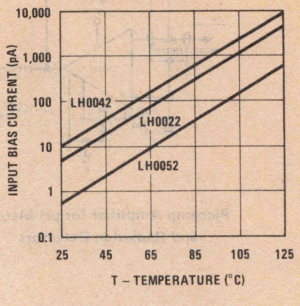

Input Bias Current vs Input Voltage

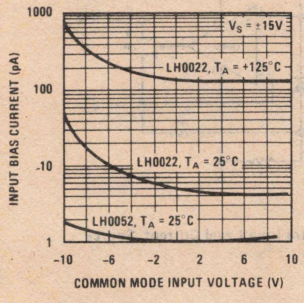

Input Offset Voltage vs Temperature

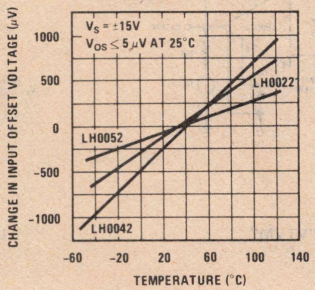

Offset Error (Without V_{OS} Null)

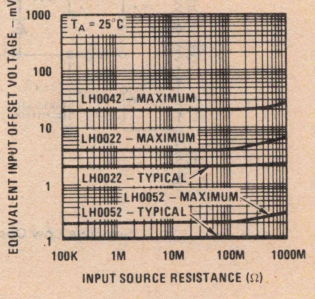

Offset Error (Without V_{OS} Null)

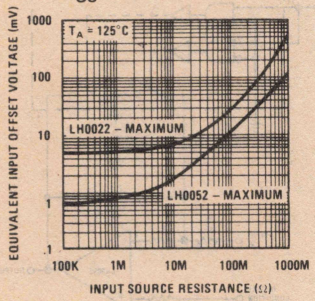

Total Input Noise Voltage* vs Source Resistance

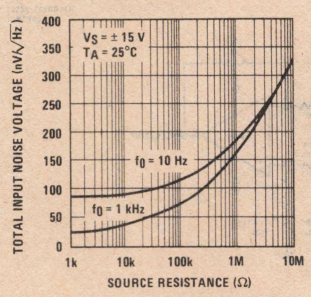

Total Input Noise Voltage* vs Frequency

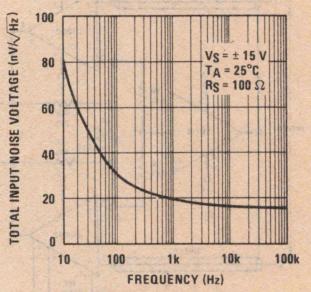

Common Mode Input Voltage vs Supply Voltage

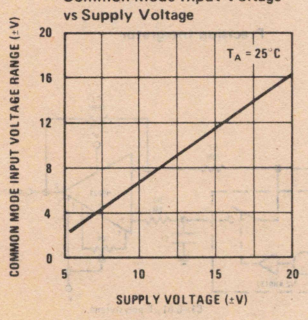

Stabilization Time of Input Offset Voltage from Power Turn-On

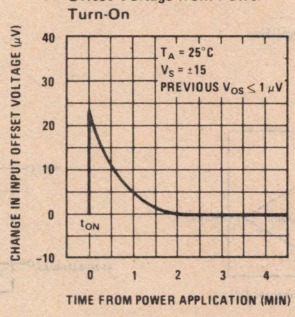

Change in Input Offset Voltage Due to Thermal Shock vs Time

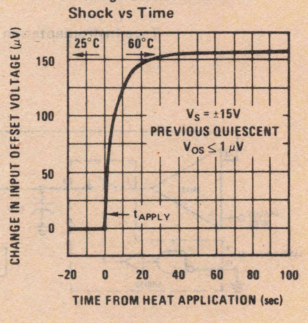

*Noise Voltage Includes Contribution from Source Resistance

typical performance characteristics (con't)

Supply Voltage vs Supply Current

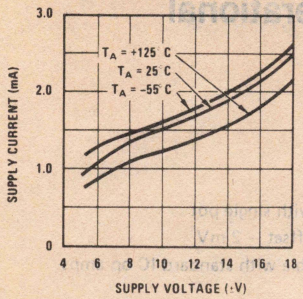

Voltage Gain

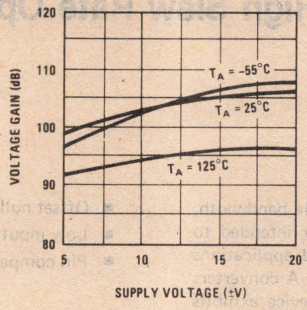

Output Swing vs Supply Voltage

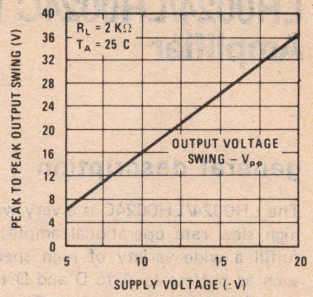

Output Voltage Swing vs Load Resistance

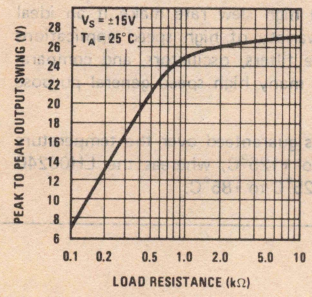

Current Limiting

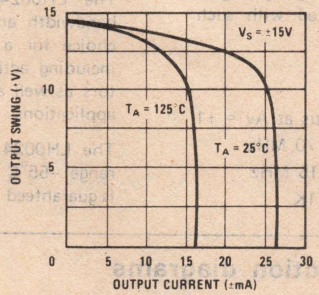

Output Voltage Swing vs Frequency

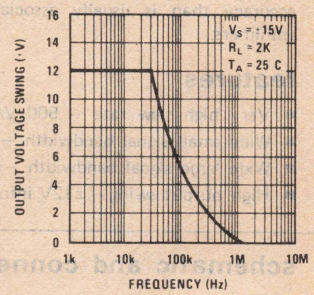

Voltage Follower Large Signal Response

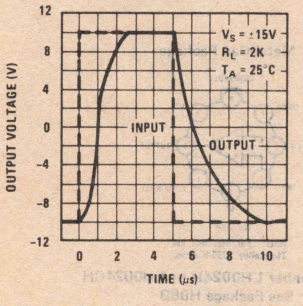

Transient Response

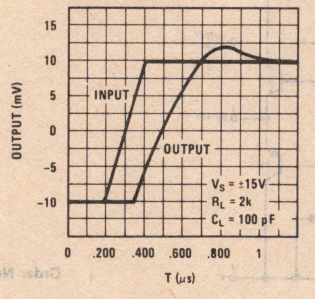

Frequency Characteristics vs Ambient Temperature

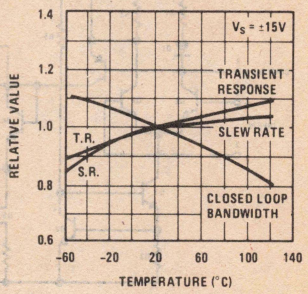

Frequency Characteristics vs Supply Voltage

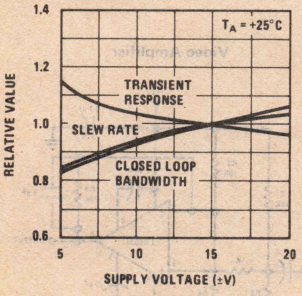

Output Resistance vs Frequency

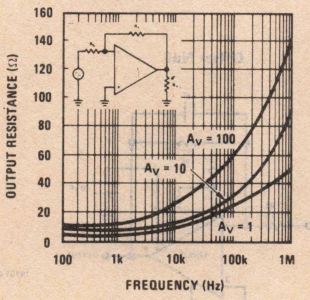

Open Loop Transfer Characteristics vs Frequency

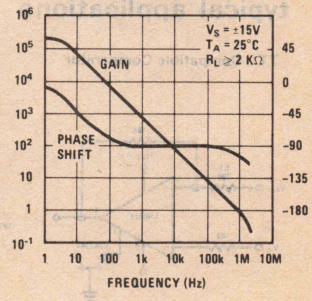

National Semiconductor

LH0024/LH0024C High Slew Rate Operational Amplifier

general description

The LH0024/LH0024C is a very wide bandwidth, high slew rate operational amplifier intended to fulfill a wide variety of high speed applications such as buffers to A to D and D to A converters and high speed comparators. The device exhibits useful gain in excess of 50 MHz making it possible to use in video applications requiring higher gain accuracy than is usually associated with such amplifiers.

features

- Very high slew rate — 500 V/μs at Av = +1
- Wide small signal bandwidth — 70 MHz
- Wide large signal bandwidth — 15 MHz
- High output swing — ±12V into 1K
- Offset null with single pot
- Low input offset — 2 mV
- Pin compatible with standard IC op amps

The LH0024/LH0024C's combination of wide bandwidth and high slew rate make it an ideal choice for a variety of high speed applications including active filters, oscillators, and comparators as well as many high speed general purpose applications.

The LH0024 is guaranteed over the temperature range −55°C to +125°C, whereas the LH0024C is guaranteed −25°C to +85°C.

schematic and connection diagrams

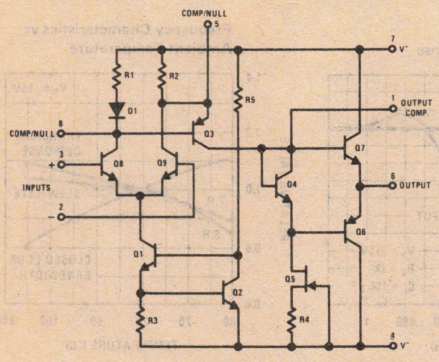

Metal Can Package

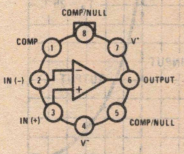

Note: For heat sink use Thermalloy 2230-5 series.

Order Number LH0024H or LH0024CH
See Package H08B

typical applications

TTL Compatible Comparator

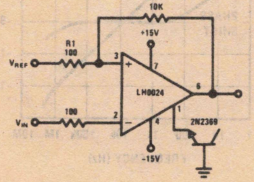

Offset Null

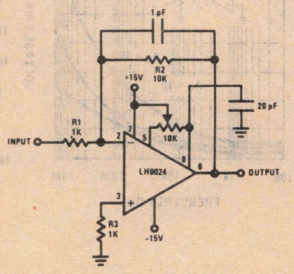

Video Amplifier

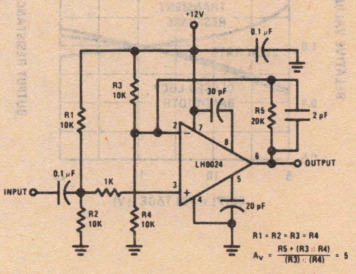

absolute maximum ratings

Supply Voltage		±18V
Input Voltage		Equal to Supply
Differential Input Voltage		±5V
Power Dissipation		600 mW
Operating Temperature Range	LH0024	−55°C to +125°C
	LH0024C	−25°C to +85°C
Storage Temperature Range		−65°C to +150°C
Lead Temperature (Soldering, 10 sec)		300°C

dc electrical characteristics (Note 1)

PARAMETER	CONDITIONS	LH0024			LH0024C			UNITS
		MIN	TYP	MAX	MIN	TYP	MAX	
Input Offset Voltage	$R_S = 50\Omega$, $T_A = 25°C$		2.0	4.0		5.0	8.0	mV
	$R_S = 50\Omega$			6.0			10.0	mV
Average Temperature Coefficient of Input Offset Voltage	$V_S = \pm15V$, $R_S = 50\Omega$ −55°C to 125°C		−20			−25		μV/°C
Input Offset Current	$T_A = 25°C$		2.0	5.0		4.0	15.0	μA
				10.0			20.0	μA
Input Bias Current	$T_A = 25°C$		15	30		18	40	μA
				40			50	μA
Supply Current			12.5	15		12.5	15	mA
Large Signal Voltage Gain	$V_S = \pm15V$, $R_L = 1k$, $T_A = 25°C$	4	5		3	4		V/mV
	$V_S = \pm15V$, $R_L = 1k$	3			2.5			V/mV
Input Voltage Range	$V_S = \pm15V$	±12	±13		±12	±13		V
Output Voltage Swing	$V_S = \pm15V$, $R_L = 1k$, $T_A = 25°C$	±12	±13		±10	±13		V
	$V_S = \pm15V$, $R_L = 1k$	±10			±10			V
Slew Rate	$V_S = \pm15V$, $R_L = 1k$, $C_1 = C_2 = 30$ pF $A_V = +1$, $T_A = 25°C$	400	500		250	400		V/μs
Common Mode Rejection Ratio	$V_S = \pm15V$, $\Delta V_{IN} = \pm10V$ $R_S = 50\Omega$		60			60		dB
Power Supply Rejection Ratio	$\pm5V \leq V_S \leq \pm18V$ $R_S = 50\Omega$		60			60		dB

Note 1: These specifications apply for $V_S = \pm15V$ and −55°C to +125°C for the LH0024 and −25°C to +85°C for the LH0024C.

frequency compensation

TABLE I

CLOSED LOOP GAIN	C_1	C_2	C_3
100	0	0	0
20	0	0	0
10	0	20 pF	1 pF
1	30 pF	30 pF	3 pF

Frequency Compensation Circuit

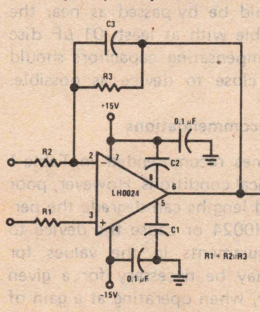

typical performance characteristics

Maximum Power Dissipation

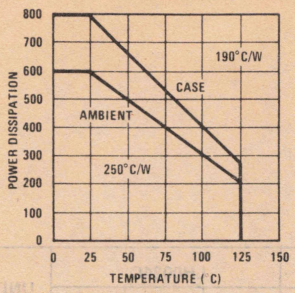

Large Signal Frequency Response

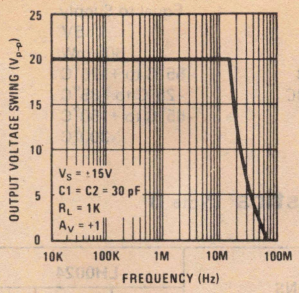

Open Loop Frequency Response

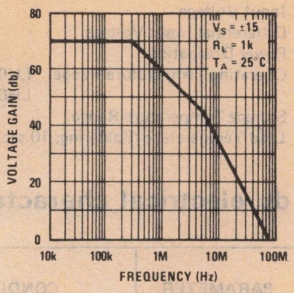

Voltage Follower Pulse Response

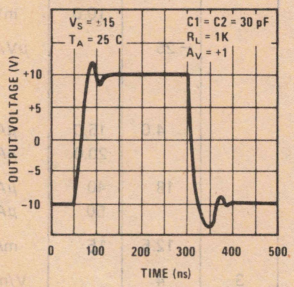

Input Voltage vs Supply Voltage

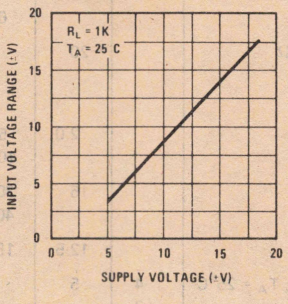

Output Voltage Swing

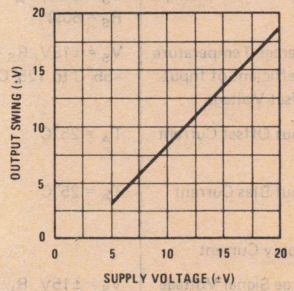

Supply Current vs Supply Voltage

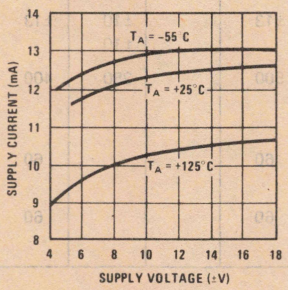

Input Bias Current vs Voltage

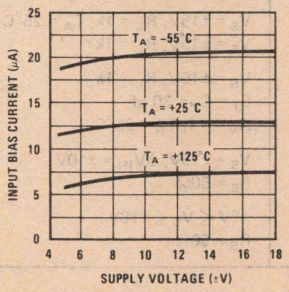

applications information

1. Layout Considerations

The LH0024/LH0024C, like most high speed circuitry, is sensitive to layout and stray capacitance. Power supplies should be by-passed as near the device as is practicable with at least .01 μF disc type capacitors. Compensating capacitors should also be placed as close to device as possible.

2. Compensation Recommendations

Compensation schemes recommended in Table 1 work well under typical conditions. However, poor layout and long lead lengths can degrade the performance of the LH0024 or cause the device to oscillate. Slight adjustments in the values for C1, C2, and C3 may be necessary for a given layout. In particular, when operating at a gain of −1, C3 may require adjustment in order to perfectly cancel the input capacitance of the device.

When operating the LH0024/LH0024C at a gain of +1, the value of R1 should be at least 1K ohm.

The case of the LH0024 is electrically isolated from the circuit; hence, it may be advantageous to drive the case in order to minimize stray capacitances.

3. Heat Sinking

The LH0024/LH0024C is specified for operation without the use of an explicit heat sink. However, internal power dissipation does cause a significant temperature rise. Improved offset voltage drift can be obtained by limiting the temperature rise with a clip-on heat sink such as the Thermalloy 2228B or equivalent.

National Semiconductor

LH0032/LH0032C Ultra Fast FET Operational Amplifier

general description

The LH0032/LH0032C is a high slew rate, high input impedance differential operational amplifier suitable for diverse application in fast signal handling. The high allowable differential input voltage, ease of output clamping, and high output drive capability particularly suit it for comparator applications. It may be used in applications normally reserved for video amplifiers allowing the use of operational gain setting and frequency response shaping into the megahertz region.

features

- High slew rate — 500 V/μs
- High bandwidth — 70 MHz
- High input impedance — $10^{12}\Omega$
- Low input bias current — 20 pA max
- Offset null with single pot
- Low input offset voltage — 2 mV max
- No compensation for gains above 50

The LH0032's wide bandwidth, high input impedance and high output capacity make it an ideal choice for applications such as summing amplifiers in high speed D to A's, buffers in data acquisition systems, and sample and hold circuits. Additional applications include high speed integrators and video amplifiers. The LH0032 is guaranteed over the temperature range −55°C to +125°C and the LH0032C is guaranteed from −25°C to +85°C.

schematic and connection diagrams

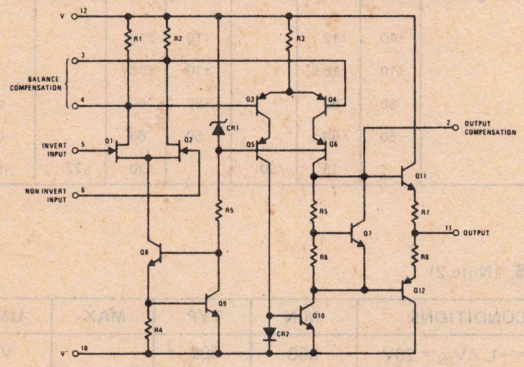

Metal Can Package

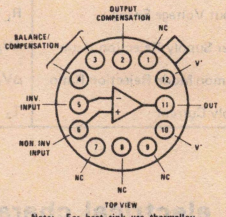

Note: For heat sink use thermalloy 2240 series or Wakefield 215-XX series.

Order Number LH0036G or LH0036CG
See NS Package H12B

High Speed Current Mode MUX

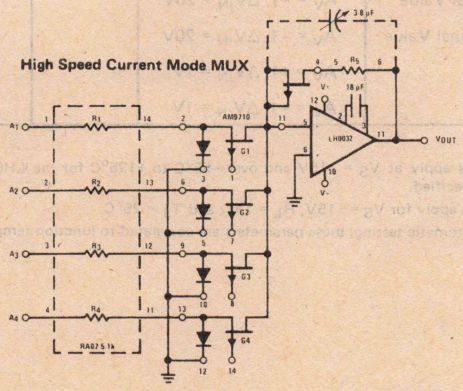

absolute maximum ratings

Supply Voltage		±18V
Input Voltage		$\pm V_S$
Differential Input Voltage		±30V
Power Dissipation		See curve
Operating Temperature Range	LH0032	−55°C to +125°C
	LH0032C	−25°C to +85°C
Storage Temperature Range		−65°C to +150°C
Lead Temperature (Soldering, 10 sec)		300°C

dc electrical characteristics (Note 1)

PARAMETER	CONDITIONS	LH0032			LH0032C			UNITS
		MIN	TYP	MAX	MIN	TYP	MAX	
Input Offset Voltage	T_J = 25°C (Note 3)		2	5		5	15	mV
				10			20	mV
Average Offset Voltage Drift			25			25		μV/°C
Input Bias Current	T_J = 25°C (Note 3)		10	100		25	200	pA
				50			15.0	nA
Input Offset Current	T_J = 25°C (Note 3)		5	25		10	50	pA
				25			5	nA
Large Signal Voltage Gain	V_{OUT} = ±10V, f = 1 kHz, R_L = 1 kΩ, T_J = 25°C	60	70		60	70		dB
	V_{OUT} = ±10V, f = 1 kHz, R_L = 1 kΩ	57			57			dB
Input Voltage Range		±10	±12		±10	±12		V
Output Voltage Swing	R_L = 1 kΩ	±10	±13.5		±10	±13		V
Power Supply Rejection Ratio	ΔV_S = ±10V	50	60		50	60		dB
Common Mode Rejection Ratio	ΔV_{IN} = 10V	50	60		50	60		dB
Supply Current	T_J = 25°C		18	20		20	22	mA

ac electrical characteristics (Note 2)

PARAMETER	CONDITIONS	MIN	TYP	MAX	UNITS
Slew Rate	A_V = +1, ΔV_{IN} = 20V	350	500		V/μs
Settling Time to 1% of Final Value	A_V = −1, ΔV_{IN} = 20V		100		ns
Settling Time to 0.1% of Final Value	A_V = −1, ΔV_{IN} = 20V		300		ns
Small Signal Rise Time	A_V = +1, ΔV_{IN} = 1V		8	20	ns
Small Signal Delay Time	A_V = +1, ΔV_{IN} = 1V		10	25	ns

Note 1: These specifications apply at V_S = ±15V and over −55°C to +125°C for the LH0032 and −25°C to +85°C for the LH0032C, unless otherwise specified.

Note 2: These specifications apply for V_S = ±15V, R_L = 1 kΩ and T_J = 25°C

Note 3: Due to high speed automatic testing, these parameters are correlated to junction temperature.

typical performance characteristics (con't)

Maximum Power Dissipation

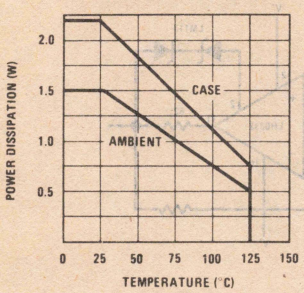

Large Signal Pulse Response

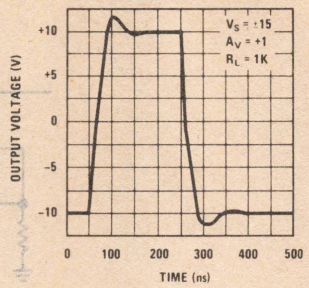

Large Signal Pulse Response

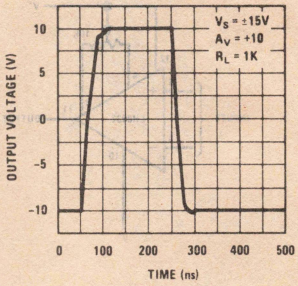

Bode Plot (Uncompensated)

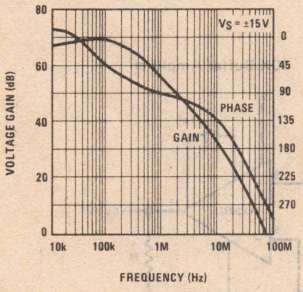

Bode Plot
(Unity Gain Compensation)

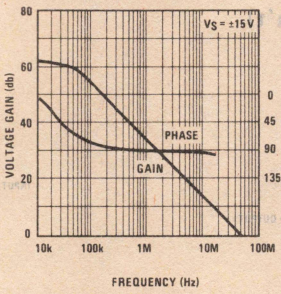

Large Signal Frequency
Response

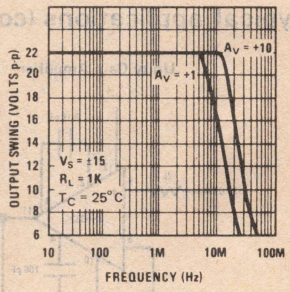

Input Voltage Range

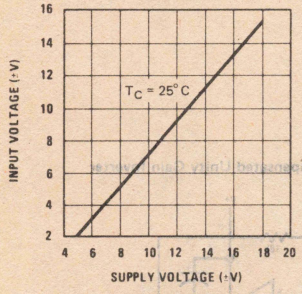

Output Swing

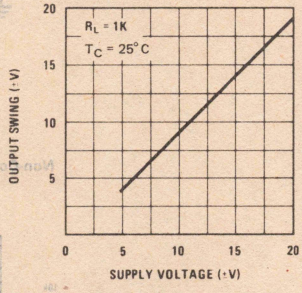

Supply Current vs Supply
Voltage

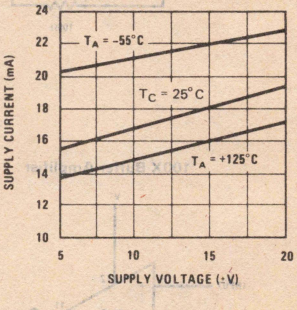

Input Bias and Offset Current
vs Temperature

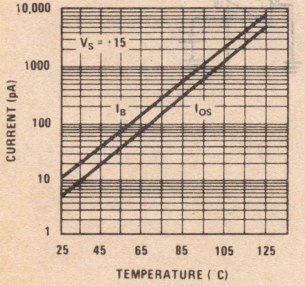

Common Mode Rejection
Ratio vs. Frequency

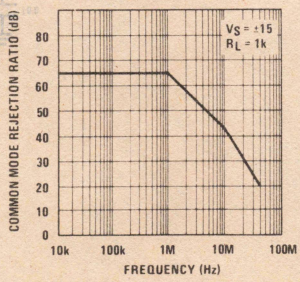

Total Input Noise Voltage
vs. Frequency*

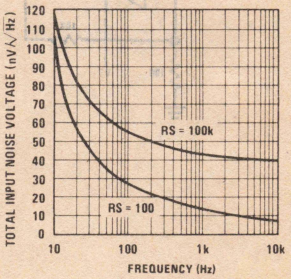

* Noise voltage includes contribution from source resistance.

auxiliary circuits

Offset Null

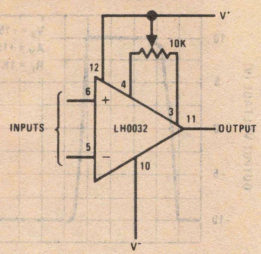

Output Short Circuit Protection

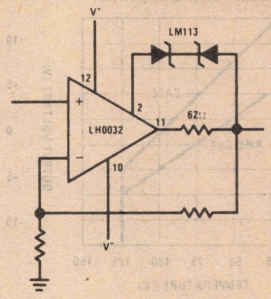

typical applications (con't)

Unity Gain Amplifier

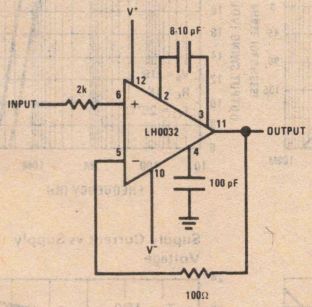

10X Buffer Amplifier

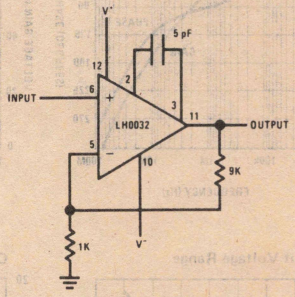

100X Buffer Amplifier

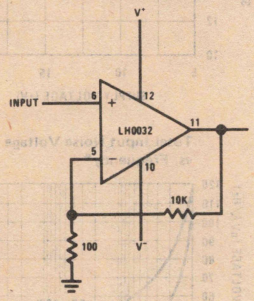

Non-Compensated Unity Gain Inverter

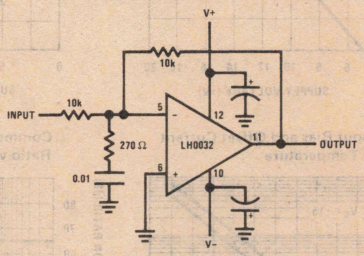

typical applications (con't)

High Speed Sample and Hold

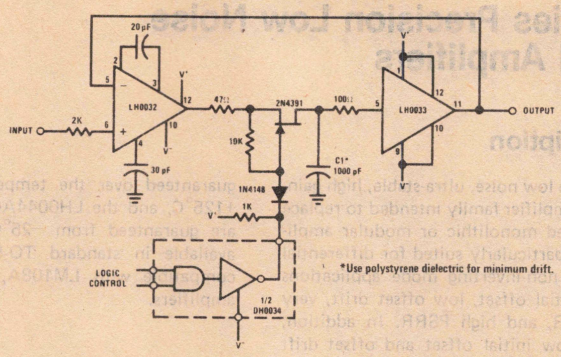

Current Mode Multiplexer

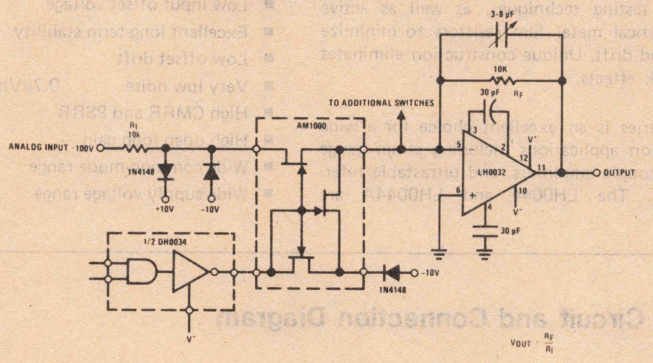

applications information

Power Supply Decoupling

The LH0032/LH0032C like most high speed circuits is sensitive to layout and stray capacitance. Power supplies should be by-passed as near to Pins 10 and 12 as practicable with low inductance capacitors such as 0.01 μF disc ceramics. Compensation components should also be located close to the appropriate pins to minimize stray reactances.

Input Capacitance

The input capacitance to the LH0032/LH0032C is typically 5 pF and thus may form a significant time constant with high value resistors. For optimum performance, the input capacitance to the inverting input should be compensated by a small capacitor across the feedback resistor. The value is strongly dependent on layout and closed loop gain, but will typically be in the neighborhood of several picofarads.

In the non-inverting configuration, it may be advantageous to bootstrap the case and/or a guard conductor to the inverting input. This serves both to divert leakage currents away from the non-inverting input and to reduce the effective input capacitance. A unity gain follower so treated will have an input capacitance under a picofarad.

Heat Sinking

While the LH0032/LH0032C is specified for operation without any explicit head sink, internal power dissipation does cause a significant temperature rise. Improved bias current performance can thus be obtained by limiting this temperature rise with a small head sink such as the Thermalloy No. 2241 or equivalent. The case of the device has no internal connection, so it may be electrically connected to the sink if this is advantageous. Be aware, however, that this will affect the stray capacitances to all pins and may thus require adjustment of circuit compensation values.

National Semiconductor

LH0044 Series Precision Low Noise Operational Amplifiers

General Description

The LH0044 Series is a low noise, ultra-stable, high gain, precision operational amplifier family intended to replace either chopper-stabilized monolithic or modular amplifiers. The devices are particularly suited for differential mode, inverting, and non-inverting mode applications requiring very low initial offset, low offset drift, very high gain, high CMRR, and high PSRR. In addition, the LH0044 Series' low initial offset and offset drift eliminate costly and time consuming null adjustments at the systems level. The superior performance afforded by the LH0044 Series is made possible by advanced processing and testing techniques, as well as active laser trim of critical metal film resistors to minimize offset voltage and drift. Unique construction eliminates thermal feedback effects.

The LH0044 Series is an excellent choice for a wide range of precision applications including strain gauge bridges, thermocouple amplifiers, and ultrastable reference amplifiers. The LH0044 and LH0044A are guaranteed over the temperature range of −55°C to +125°C, and the LH0044AC, LH0044B, and LH0044C are guaranteed from −25°C to +85°C. The device is available in standard TO-5 op amp pin out and is compatible with LM108A, LM725, and LM741 type amplifiers.

Features

- Low input offset voltage — 25μV max
- Excellent long-term stability — ±1μV/month max
- Low offset drift — 0.5μV/°C max
- Very low noise — 0.7μVp-p max 0.1 Hz to 10 Hz
- High CMRR and PSRR — 120 dB min
- High open loop gain — 120 dB min
- Wide common-mode range — ±13V min
- Wide supply voltage range — ±2V to ±20V

Equivalent Circuit and Connection Diagram

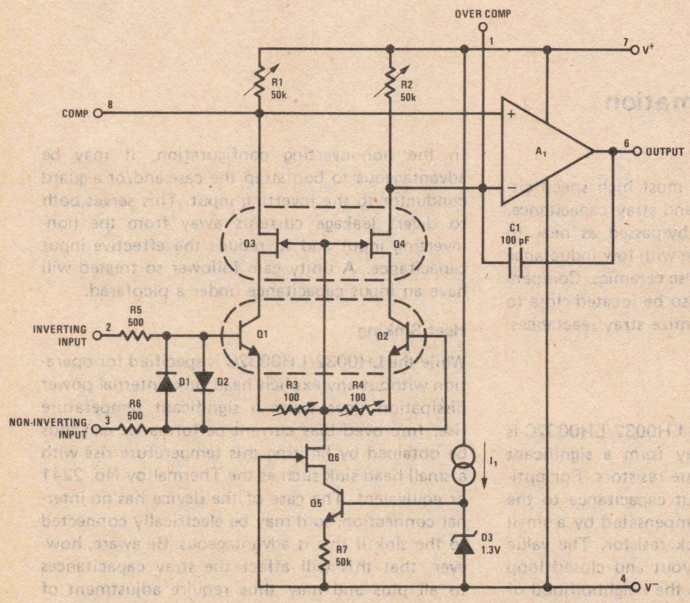

Metal Can Package

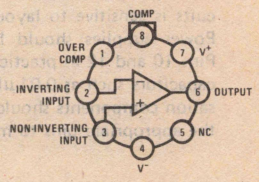

TOP VIEW

Case is electrically isolated

Note: Compensation is not normally required. However, for maximum stability, a 0.01μF capacitor should be placed between pins 7 and 8 when device is used below closed loop gains of 10.

Order Number LH0044H, LH0044AH, LH0044CH, LH0044ACH, LH0044BH

See Package H08B

Absolute Maximum Ratings

Supply Voltage	±20V
Power Dissipation	600 mW
Differential Input Voltage (Note 4)	±1V
Input Voltage (Note 5)	±15V
Output Short-Circuit Duration	Continuous
Operating Temperature Range	
LH0044, LH0044A	−55°C to +125°C
LH0044AC, LH0044B, LH0044C	−25°C to +85°C
Storage Temperature Range	−65°C to +150°C
Lead Temperature (Soldering, 10 seconds)	300°C

DC Electrical Characteristics (Note 1)

PARAMETER	CONDITIONS	LIMITS						UNITS
		LH0044A/LH0044AC			LH0044/LH0044B/LH0044C			
		MIN	TYP	MAX	MIN	TYP	MAX	
Input Offset Voltage	$T_A = 25°C$, $R_S = 50\Omega$, $V_{CM} = 0V$		8	25		12	50	μV
	LH0044C Only						100	μV
Input Offset Voltage	$R_S = 50\Omega$, $V_{CM} = 0V$			50			150	μV
	LH0044A and LH0044B Only			75			75	μV
Average Input Offset Voltage Drift	$T_{MIN} \leq T_A \leq T_{MAX}$		0.1	0.5		0.2	1.3	μV/°C
	LH0044B Only						0.5	μV/°C
Long-Term Stability	(Note 2)		0.2	1		0.3	2	μV/month
Input Noise Voltage (Note 3)	BW = 0.1 Hz to 10 Hz, $R_S = 50\Omega$		0.35	0.7		0.35	0.8	μVp-p
	R_S = 10 kΩ Imbalance		0.50	0.9		0.50	1.0	μVp-p
Thermal Feedback Coefficient			0.005			0.005		μV/mW
Open Loop Voltage Gain	R_L = 10 kΩ	120	145		114	140		dB
Common-Mode Rejection Ratio	$-10V \leq V_{CM} \leq +10V$	120	145		114	140		dB
Power Supply Rejection Ratio	$\pm 3V \leq V_S \leq \pm 18V$	120	145		114	140		dB
Input Voltage Range		±13	±13.8		±12	±13.5		V
Output Voltage Swing	R_L = 10 kΩ	±13	±13.7		±12	±13.5		V
Input Offset Current	$25°C \leq T_A \leq T_{MAX}$		1.0	2.5		1.5	5.0	nA
	$T_{MIN} \leq T_A < 25°C$			5.0			10.0	nA
Average Input Offset Current Drift			5	40		15	80	pA/°C
Input Bias Current	$25°C \leq T_A \leq T_{MAX}$		8.5	15		10	30	nA
	$T_{MIN} \leq T_A < 25°C$			50			100	nA
Average Input Bias Current Drift			50	300		100	600	pA/°C
Differential Input Impedance		5	10		2.5	8		MΩ
Common-Mode Input Impedance			2×10^{11}			2×10^{11}		Ω
Supply Current	$I_L = 0$		0.9	3.0		1.0	4.0	mA
Power Dissipation			27	90		30	120	mW

AC Electrical Characteristics $T_A = 25°C$, $V_S = \pm 15V$

PARAMETER	CONDITIONS	TYP	UNITS
Input Noise Voltage	R_S = 1 kΩ, f_O = 10 Hz	11	$nV/\sqrt{Hz}$
	R_S = 1 kΩ, f_O = 1 kHz	9	$nV/\sqrt{Hz}$
Slew Rate	$A_V = +1$, R_L = 10 kΩ, $V_{IN} = \pm 10V$	0.06	V/μs
Large Signal Bandwidth	$A_V = +1$, R_L = 10 kΩ, $V_{IN} = \pm 10V$	1	kHz
Overload Recovery Time	$A_V = +100$, $V_{IN} = -100$ mV, ΔV_{IN} = 200 mV	5	μs
Small Signal Bandwidth	$A_V = +1$, R_L = 10 kΩ	400	kHz
Small Signal Rise Time	$A_V = +1$, R_L = 10 kΩ, V_{IN} = 10 mV	2.5	μs
Overshoot	$A_V = +1$, R_L = 10 kΩ, V_{IN} = 10 mV, C_L = 100 pF	10	%

Note 1: All specifications apply for all device grades, at $V_S = \pm 15V$, and from T_{MIN} to T_{MAX} unless otherwise specified. T_{MIN} is −55°C and T_{MAX} is +125°C for the LH0044A and LH0044. T_{MIN} is −25°C and T_{MAX} is +85°C for the LH0044AC, LH0044B and LH0044C. Typicals are given for $T_A = 25°C$.

Note 2: This parameter is not 100% tested; however, 90% of the devices are guaranteed to meet this specification after one month of operation and after initial turn-on stabilization.

Note 3: Noise is 100% tested on the LH0044A, LH0044AC and LH0044B only. 90% of the LH0044 and LH0044C devices are guaranteed to meet this specification.

Note 4: The inputs are shunted by back-to-back diodes for over-voltage protection. Excessive current will flow for differential input voltages in excess of 1V. Input current should be limited to less than 1 mA.

Note 5: For supply voltages less than ±15V, the absolute maximum input voltage is equal to the supply voltage.

Typical Performance Characteristics

Total Input Noise Voltage vs Frequency

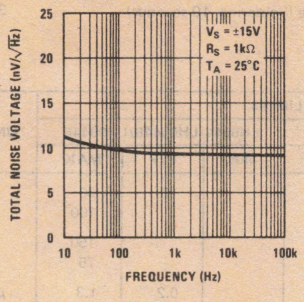

Input Bias Current

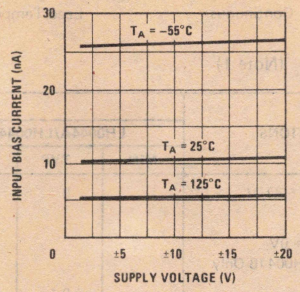

Input Voltage Range

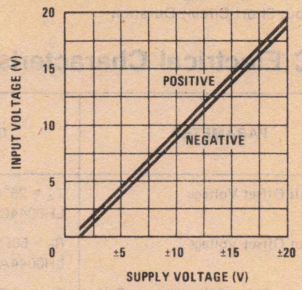

Input Bias Current vs Common-Mode Input Voltage

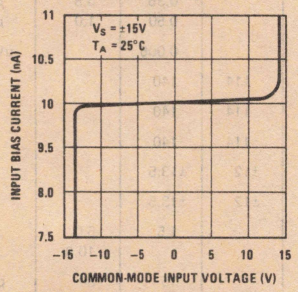

Supply Current vs Supply Voltage

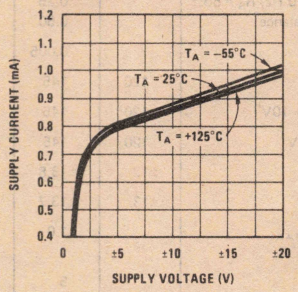

Open Loop Frequency Response

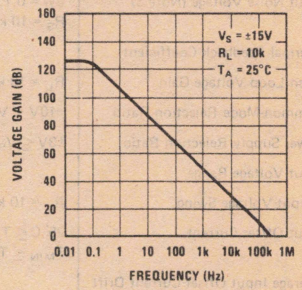

Large Signal Voltage Response

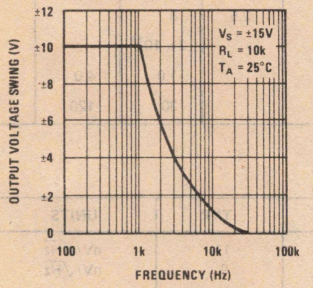

Output Swing

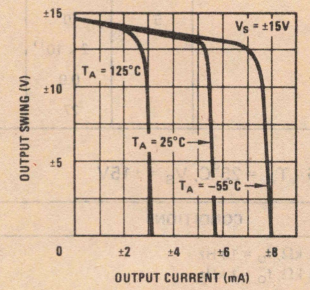

Large Signal Pulse Response

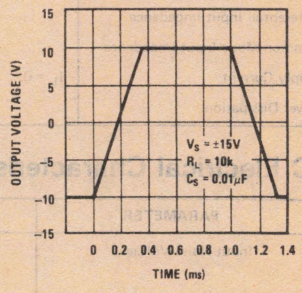

Power Supply Rejection Ratio vs Frequency

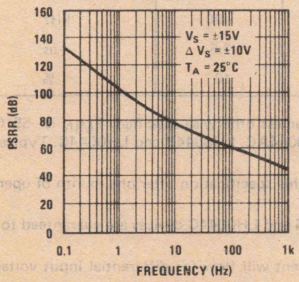

CMRR vs Frequency

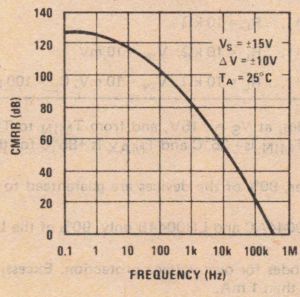

Maximum Power Dissipation

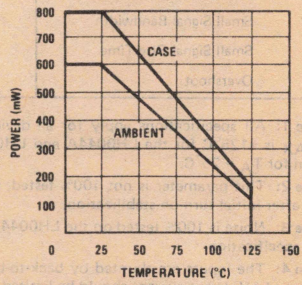

Applications Information

LOW DRIFT CONSIDERATIONS

Achieving ultra-low drift in practical applications requires strict attention to board layout, thermocouple effects, and input guarding. For specific recommendations refer to AN-63 and AN-79.

A point worth stressing with regard to low drift specifications is testing of the LH0044. Simply stated—it is virtually impossible to test the device using a thermoprobe or other form of local heating. A one degree centigrade temperature gradient can account for tens of microvolts of virtual offset (or drift). The test circuit of *Figure 1* is recommended for use in a stabilized oven or continuously stirred oil bath with the entire circuit inside the oven or bath. Isothermal layout of the resistors is advised in order to minimize thermocouple induced EMF's.

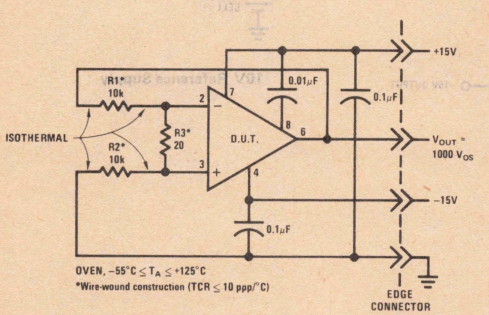

FIGURE 1. LH0044 Temperature Test Circuit

OVER COMPENSATION

The LH0044 may be overcompensated in order to minimize noise bandwidth by paralleling the internal 100 pF capacitor with an external capacitor connected between pins 1 and 6. Unity gain frequency may be predicted by:

$$f = \frac{4 \times 10^{-5}}{100\ \text{pF} + C_{ext}\ \text{pF}}\ \text{(Hz)}$$

COMPENSATION

For closed loop gains in excess of 10, no external components are required for frequency stability. However, for gains of 10 or less, a 0.01μF disc capacitor is recommended between pin 7 (V^+) and pin 8 (Comp). An improvement in ac PSRR will also be realized by use of the 0.01μF capacitor.

OFFSET NULL

In general, further nulling of LH0044 is neither necessary nor recommended. For most applications the specified initial offset is sufficient.

However, for those applications requiring additional null, an obvious temptation might be to place a pot between pins 1 and 8 with the wiper returned to V^+. This technique will usually result in reduced gain and increased offset drift due to mismatch in the TCR of the pot and R1 and R2. The technique is, therefore, not generally recommended.

The recommended technique for offset nulling the LH0044 is shown in *Figure 2.* Null is accomplished in A_2 and all errors are divided by the closed loop gain of the LH0044. Additional offset and drift incurred due to use of A_2 is less than 1μV/V for V^+ and V^- changes and 0.01μV/°C drift for the values shown in *Figure 2.*

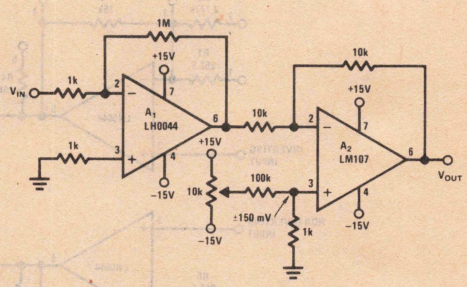

FIGURE 2. LH0044 Null Technique

Typical Applications

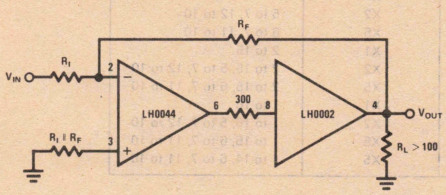

Buffered Output for Heavy Loads

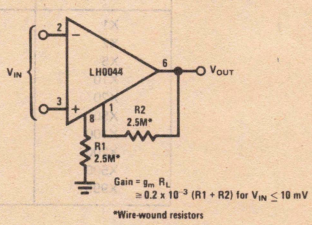

X1000 Instrumentation Amp

Typical Applications (Continued)

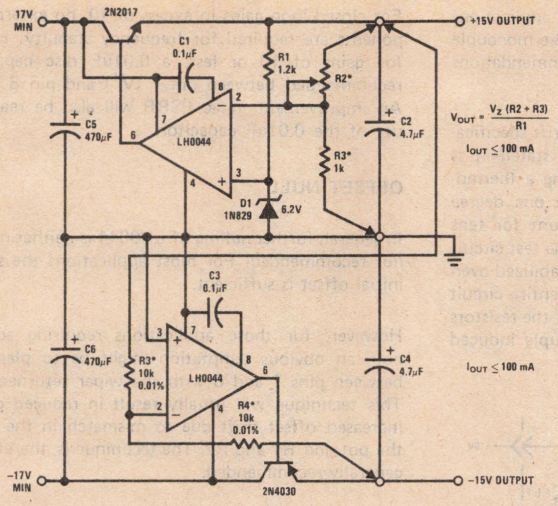

$V_{OUT} = \frac{V_Z (R2 + R3)}{R1}$

$I_{OUT} \leq 100$ mA

$I_{OUT} \leq 100$ mA

*Wire-wound for minimum drift.
Line and load regulation ≤ 0.005%

Precision Dual Tracking Regulator

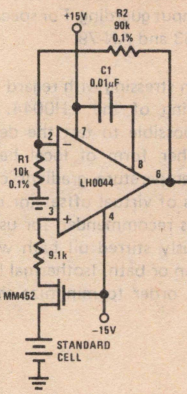

10V Reference Supply

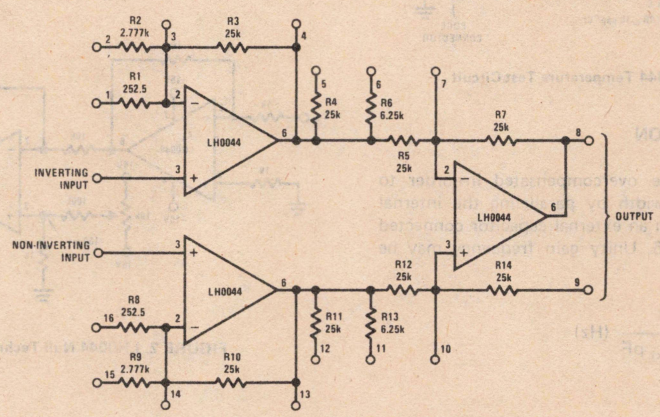

All resistors are part of National's RA201 resistor array.

OVERALL GAIN	INPUT STAGE GAIN	OUTPUT STAGE GAIN	JUMPER PINS ON RA201
X1	X1	X1	–
X2	X1	X2	5 to 7, 12 to 10
X5	X1	X5	6 to 7, 11 to 10
X10	X10	X1	2 to 15
X20	X10	X2	2 to 15, 5 to 7, 12 to 10
X50	X10	X5	2 to 15, 6 to 7, 11 to 10
X100	X100	X1	1 to 16
X200	X100	X2	1 to 16, 5 to 7, 12 to 10
X500	X100	X5	1 to 16, 6 to 7, 11 to 10
X995	X199	X5	1 to 14, 6 to 7, 11 to 10

Precision Instrumentation Amplifier

Noise Test Circuit

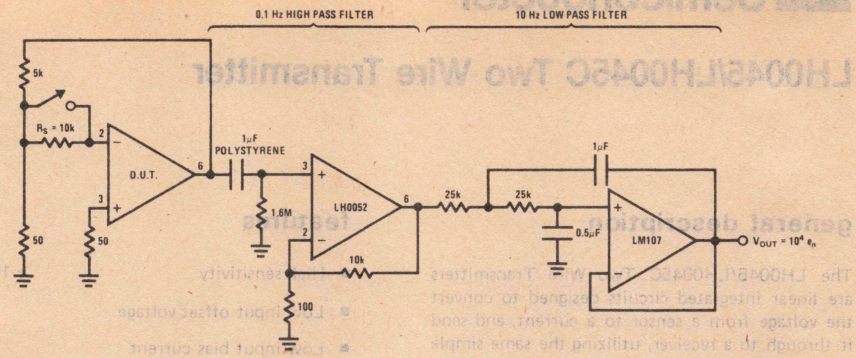

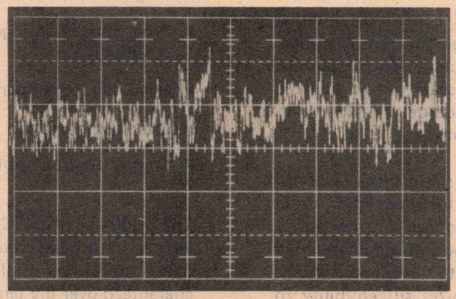

National Semiconductor

LH0045/LH0045C Two Wire Transmitter

general description

The LH0045/LH0045C Two Wire Transmitters are linear integrated circuits designed to convert the voltage from a sensor to a current, and send it through to a receiver, utilizing the same simple twisted pair as the supply voltage.

The LH0045 and LH0045C contain an internal reference designed to power the sensor bridge, a sensitive input amplifier, and an output current source. The output current scale can be adjusted to match the industry standards of 4.0 mA to 20 mA or 10 mA to 50 mA.

Designed for use with various sensors, the LH0045/LH0045C will interface with thermocouples, strain gauges, or thermistors. The use of the power supply leads as the signal output eliminates two or three extra wires in remote signal applications. Also, current output minimizes susceptibility to voltage noise spikes and eliminates line drop problems.

features

- High sensitivity — > 10 μA/μV
- Low input offset voltage — 1.0 mV
- Low input bias current — 2.0 nA
- Single supply operation — 10V to 50V
- Programmable bridge reference (LH0045G) — 5.0V to 30V
- Non-interactive span and null adjust
- Over compensation capability
- Supply reversal protection

The LH0045/LH0045C is intended to fulfill a wide variety of process control, instrumentation, and data acquisition applications. The LH0045 is guaranteed over the temperature range of −55°C to +125°C; whereas the LH0045C is guaranteed from −25°C to +85°C.

equivalent schematic and connection diagrams

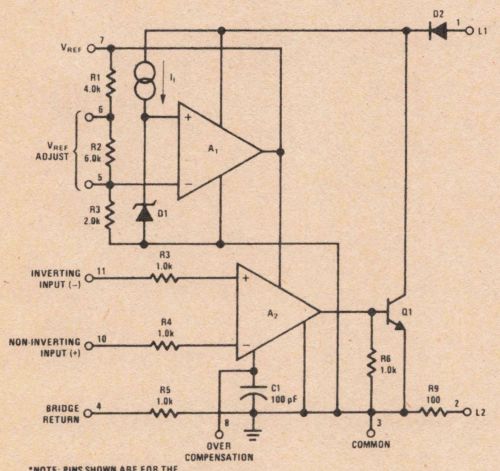

*NOTE: PINS SHOWN ARE FOR THE 12 PIN TO-8 ("G") PACKAGE.

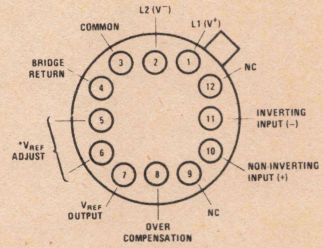

TOP VIEW

*NOTE: PIN 5 IS SHORTED TO PIN 6 TO OBTAIN A NOMINAL +5.1V, V_{REF}. LEFT OPEN V_{REF} = +10V.

THE CASE IS ISOLATED FROM THE CIRCUIT FOR BOTH TO-3 AND TO-8

Order Number LH0045G or LH0045CG
See Package H12B

TO-3

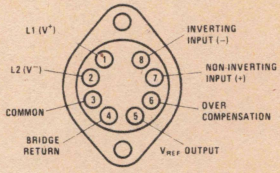

TOP VIEW

Order Number LH0045K or LH0045CK
See Package K08A

absolute maximum ratings

Supply Voltage (L1 to common)	+50V
Input Current	±20 mA
Input Voltage (Either Input to Common)	0V to V_{REF}
Differential Input Voltage	±20 V
Output Current (Either L1 or L2)	50 mA
Reference Output Current	5.0 mA
Power Dissipation	
LH0045G	1.5W
LH0045K	3.0W
Operating Temperature Range	
LH0045	−55°C to +125°C
LH0045C	−25°C to +85°C
Storage Temperature Range	−65°C to +150°C
Lead Temperature (Soldering, 10 seconds)	300°C

electrical characteristics (Note 1)

PARAMETER	CONDITIONS	LIMITS						UNITS
		LH0045			LH0045C			
		MIN	TYP	MAX	MIN	TYP	MAX	
Input Offset Voltage (V_{OS})	I_S = 4.0 mA, T_A = 25°C		0.7	2.0		2.0	7.5	mV
	I_S = 4.0 mA			3.0			10	mV
Offset Voltage Temperature Coefficient ($\Delta V_{OS}/\Delta T$)	I_S = 4.0 mA		3.0			6.0		μV/°C
Input Bias Current (I_B)	T_A = 25°C		0.8	2.0		1.5	7.0	nA
				3.0			10	nA
Input Offset Current (I_{OS})	T_A = 25°C		0.05	0.2		0.2	1.0	nA
				0.4			1.5	nA
Open Loop Transconductance (g_{MOL})	ΔI_S = 4.0 mA to 20 mA	10^6	10^7		10^6	10^7		μ℧
	ΔI_S = 10 mA to 50 mA	$2x10^6$	$2x10^7$		$2x10^6$	$2x10^7$		μ℧
Supply Voltage Range (V_S)		9.0		50	9.0		50	V
	LH0045G pins 5 and 6 open	15		50	15		50	V
Input Voltage Range (V_{IN})		1.0		3.3	1.0		3.3	V
	LH0045G pins 5 and 6 open	1.0		7.6	1.0		7.6	V
Open Loop Output Impedance (R_{OUT})	V_S = 10V to 45V, I_S = 4.0 mA, T_A = 25°C		1.0			1.0		MΩ
Common Mode Rejection Ratio (CMRR)	ΔV_{IN} = 1.0V to 3.3V, I_S = 12 mA	0.1	0.05		0.1	0.05		mV/V
Power Supply Rejection Ratio (PSRR)	ΔV_S = 10V to 45V, I_S = 12 mA	0.1	0.01		0.1	0.01		mV/V
Open Loop Supply Current (I_{SOL})	V_S = 50V		2.0	3.0		2.0	3.0	mA
Reference Voltage Load Regulation ($\Delta V_{REF}/\Delta I_{REF}$)	ΔI_{REF} = 0 mA to 2.0 mA, T_A = 25°C		0.05	0.2		0.05	0.2	%
Reference Voltage Line Regulation ($\Delta V_{REF}/\Delta V_S$)	ΔV_S = 10V to 45V, T_A = 25°C		0.3	0.5		0.3	0.7	mV/V
Reference Voltage Temperature Coefficient ($\Delta V_{REF}/\Delta T$)	I_{REF} = 2.0 mA		0.004			0.004		%/°C
Reference Voltage (V_{REF})	I_{REF} = 2.0 mA, T_A = 25°C	4.3	5.1	5.9	4.3	5.1	5.9	V
	I_{REF} = 2.0 mA, T_A = 25°C, LH0045G pins 5 and 6 open	8.6	10.3	12	8.6	10.3	12	V
Resistor R9	I_S = 12 mA, T_A = 25°C	95	100	105	95	100	105	Ω
Average Temperature Coefficient of R9 (TCR_9)	I_S = 12 mA		50	300		50	300	PPM/°C
Resistor R5	I_S = 1.0 mA, T_A = 25°C	950	1000	1050	950	1000	1050	Ω
Average Temperature Coefficient of R5 (TCR_5)	I_S = 1.0 mA		50	300		50	300	PPM/°C
Input Resistance (R_{IN})	T_A = 25°C		50			50		MΩ

Note 1: Unless otherwise specified, these specifications apply for +10V ≤ V_S ≤ +50V, pin 5 shorted to pin 6 on the LH0045G, over the temperature range −55°C to +125°C for the LH0045 and −25°C to +85°C for the LH0045C.

typical performance characteristics

LH0045G Maximum Power Dissipation

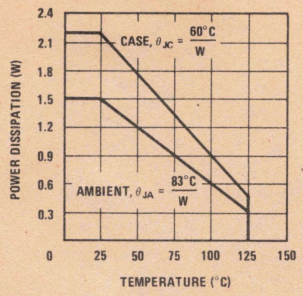

LH0045K Maximum Power Dissipation

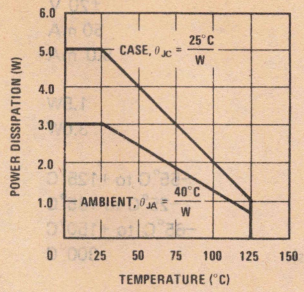

Safe Operating Area

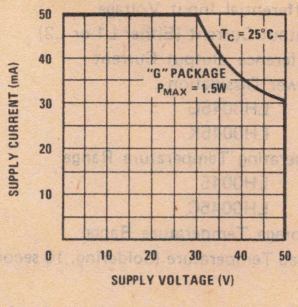

Input Noise Voltage

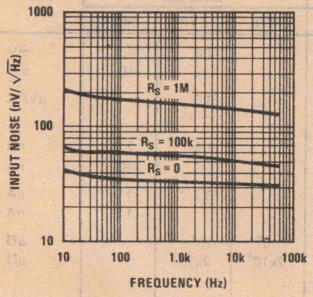

Input Currents

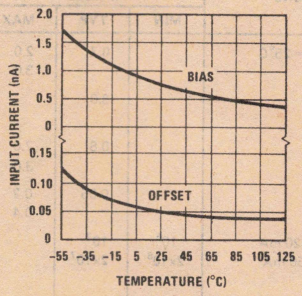

Open Loop Transconductance vs Frequency

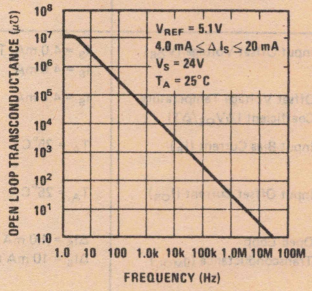

Power Supply Rejection Ratio vs Frequency

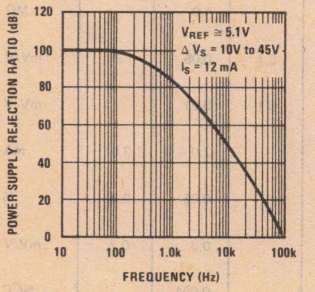

V_{REF} Line Regulation

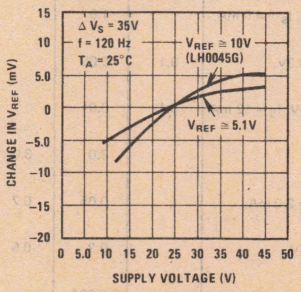

Variation of V_{REF} With Temperature Normalized to 25°C

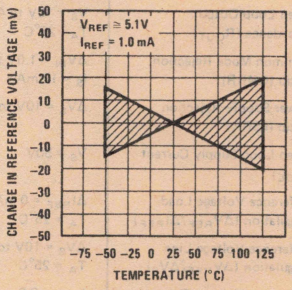

V_{REF} vs Resistance Between Pin 5 and Pin 3

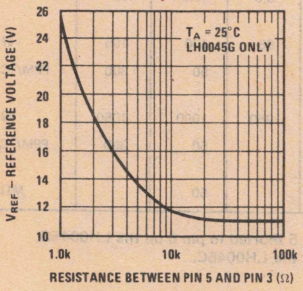

Open Loop Supply Current vs Temperature

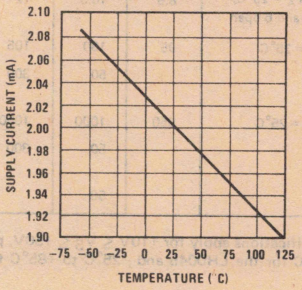

Change in R9 With Temperature Normalized to 25°C

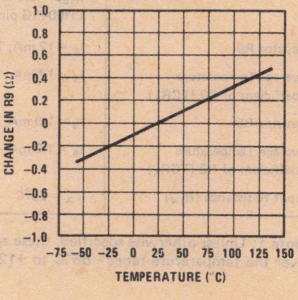

typical applications*

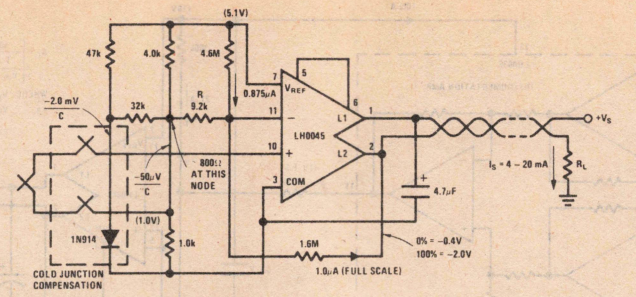

FOR 1μA FULL SCALE, $R_{IN} = V_{IN}/1\mu A$ = SOURCE IMPEDANCE @ PIN 11
e.g., V_{IN} (FULL SCALE) = 10 mV, R_{IN} = 10k
BRIDGE IMPEDANCE = 0.8k, R = 10k − 0.8k = 9.2k

Thermocouple Input Transmitter

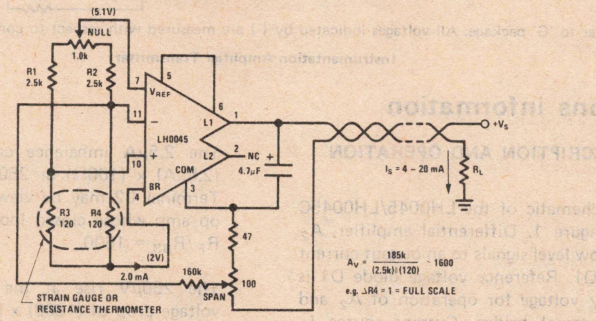

Resistance Bridge Input Transmitter

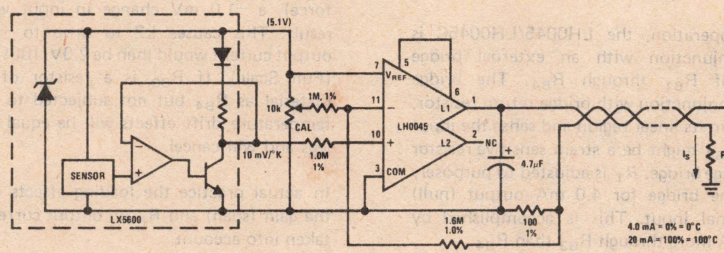

Electronic Temperature Sensor

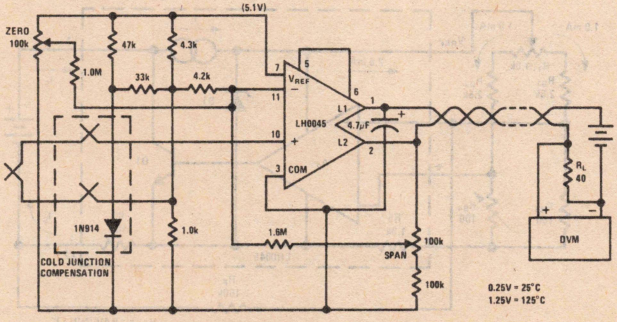

Remote Sensing Digital Thermometer

*Pin numbers refer to 'G' package. All voltages indicated by ( ) are measured with respect to common, pin 3.

typical applications* (con't)

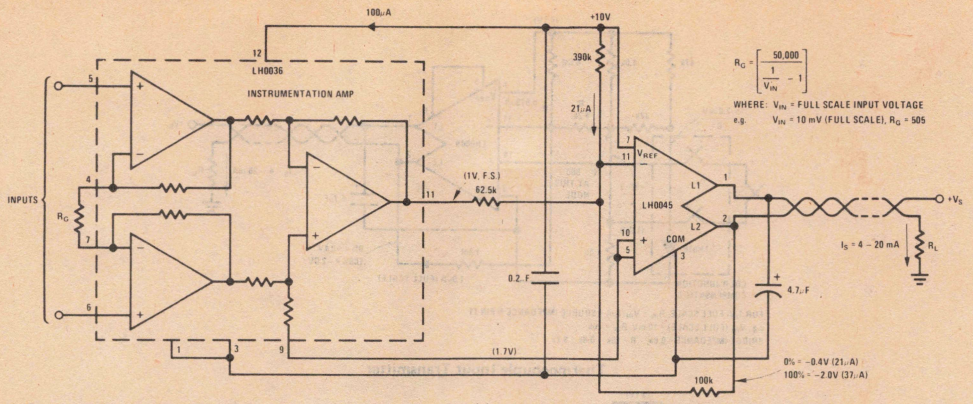

*Pin numbers refer to 'G' package. All voltages indicated by ( ) are measured with respect to common, pin 3.

Instrumentation Amplifier Transmitter

applications information

CIRCUIT DESCRIPTION AND OPERATION

A simplified schematic of the LH0045/LH0045C is shown in Figure 1. Differential amplifier, A_2 converts very low level signals to an output current via transistor Q1. Reference voltage diode D1 is used to supply voltage for operation of A_2 and to bias an external bridge. Current source I_1 minimizes fluctuation in the bridge reference voltage due to changes in V_S.

In normal operation, the LH0045/LH0045C is used in conjunction with an external bridge comprised of R_{B1} through R_{B4}. The bridge resistors in conjunction with bridge return resistor, R5, bias A_2 in its linear region and sense the input signal; e.g. R_{B4} might be a strain sensitive resistor in a strain gauge bridge. R_T is adjusted to purposely unbalance the bridge for 4.0 mA output (null) for zero signal input. This is accomplished by forcing 2.5μA more through R_{B3} than R_{B4}.

The 2.5μA imbalance causes a voltage rise of (2.5μA) x (100Ω) or 250μV at the top of R_{B3}. Terminal L2 may be viewed as the output of an op amp whose closed loop gain is approximately R_F/R_{B3} = 1600.

The 250μV rise at the top of R_{B3} causes a voltage drop of (1600) x (250μV) or −0.4V across R9. An output current, I_S, equal to 0.4V/R9 or 4.0 mA is thus established in Q1. If R_{B4} is now decreased by 1.0Ω (due to application of a strain force), a −1.0 mV change in input voltage will result. This causes L2 to drop to −2.0V. The output current would then be 2.0V/100Ω or 20 mA (Full Scale). If R_{B3} is a resistor of the same material as R_{B4} but not subjected to the strain, temperature drift effects will be equal in the two legs and will cancel.

In actual practice the loading effects of R_{B2} on the gain (span) and R_F on output current must be taken into account.

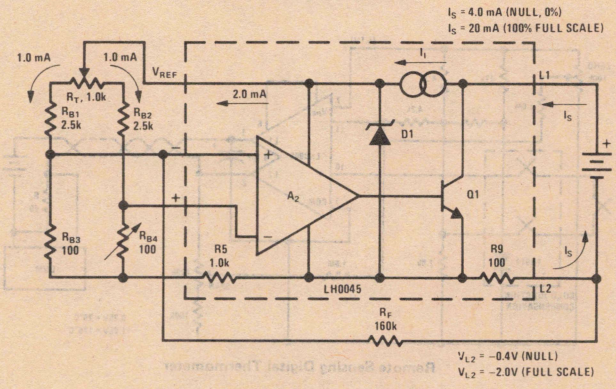

FIGURE 1. LH0045 Simplified Schematic

applications information (con't)

THERMAL CONSIDERATIONS

The power output transistor of the LH0045 is thermally isolated from the signal amplifier, A_2. Nevertheless, a change in the power dissipation will cause a change in the temperature of the package and thus may cause amplifier drift. These temperature excursions may be minimized by careful heat sinking to hold the case temperature equal to the ambient. With the TO-8 (G) package this is best accomplished by a clip-on heat sink such as the Thermalloy #2240A or the Wakefield #215-CB. The 8 lead TO-3 is particularly convenient for heat sinking, in that it may be bolted directly to many commercial aluminum heat sink extrusions, or to the chassis. In both packages the case is electrically isolated from the circuit.

In addition, the power change can be minimized by operating the device from relatively high supply voltages in series with a relatively high load resistance. When the signal forces the supply current higher, the voltage across the device will be reduced and the internal power dissipation kept nearly equal to the low current, high voltage condition.

For example, take the case of a 4.0 mA to 20 mA transmitter with a 24V supply and a 100Ω load resistance. The power at 4.0 mA is (23.6V) x (4.0 mA) = 94.4 mW while at full scale the power is (22V) x (20 mA) = 440 mW. The net change in power is 345 mW. This change in power will cause a change in temperature and thus a change in offset voltage of A_2.

If the optimum load resistance of 800Ω (from Figure 2) is used, the power at null is [24V − (4.0 mA) x (800Ω)] (4.0 mA) = 83 mW. The power at full scale is [24V − (20 mA) x (800Ω)] (20 mA) = 160 mW. The net change is 77 mW. This change is significantly less than without the resistor.

If the supply voltage is increased to 48V and the load resistance chosen to be the optimum value from Figure 2 (1.95k), then the power at null is [48V − (4.0 mA) x (1.95k)] (4.0 mA) = 160.8 mW and the power at full scale is [48 − (20) x (1.95k)] (20 mA) = 180 mW for a net change of 19.2 mW.

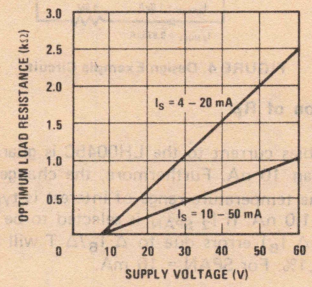

FIGURE 2. Optimum Load Resistance vs Supply Voltage

Note that the optimized load resistance is actually the sum of the line resistance, receiver resistances and added external load resistance. However, in many applications the line resistance and receiver resistances are negligible compared to the added external load resistance and thus may be omitted in calculations.

AUXILIARY PINS

The LH0045 has several auxiliary pins designed to provide the user with enhanced flexibility and performance. The following is a discussion of possible uses for these pins.

Programmable V_{REF} – Pins 5 and 6 (LH0045G Only)

The LH0045G provides pins 5 and 6 to allow the user to program the value of the reference voltage. The factory trimmed 10V value is obtained by leaving 5 and 6 open. A short between 5 and 6 will program the reference to a nominal 5.1V (equivalent to the fixed value used in the LH0045K).

A resistor or pot may be placed between pin 5 and common (pin 3) to obtain reference voltages between 10V and 30V or between pin 5 and pin 7 for reference voltages below 10V. Increased reference voltage might be useful to extend the positive common mode range or to accommodate transducers requiring higher supply voltage. A plot of resistance between pin 5 and pin 3 versus V_{REF} is given in the typical electrical characteristics section. V_{REF} may be adjusted about its nominal value by arranging a pot from V_{REF} to common and feeding a resistor from the wiper into pin 5 so that it may either inject or extract current. Lastly, pin 5 may be used as a nominal 1.7V reference point, if care is taken not to unduly load it with either dc current or capacitance. Obviously, higher supply voltages must be used to obtain the higher reference values. The minimum supply voltage to reference voltage differential is about 4.0V.

Bridge Return

An applications resistor is provided in the LH0045 with a nominal value of 1.0 kΩ. The primary application for the resistor is to maintain the minimum common mode input voltage (1.0V) required by the signal amplifier, A_2. A typical input application might utilize a strain gauge or thermistor bridge where the resistance of the sensor is 100Ω. Since only 1.0 mA may be drawn from V_{REF}, the 1.0 kΩ bridge return resistor is used to bias A_2 in its linear region as shown in Figure 3.

applications information (con't)

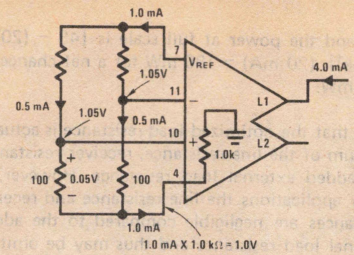

FIGURE 3. Use of Bridge Return

Over Compensation — Pin 8 (LH0045G), Pin 6 (LH0045K)

Over compensation of the signal amplifier, A_2 may be desirable in dc applications where the noise-bandwidth must be minimized. A capacitor should be placed between pin 8 (pin 6 on the LH0045K) and pin 3, common.

Typically,

$$f_{3db} = \frac{1}{2\pi R (C_1 + C_{EXT})}$$

where:

R = 400 MΩ

C1 = Internal Compensation Capacitor = 100 pF

C_{EXT} = External (over-compensation) Capacitor

Input Guard — Pins 9 and 12 (LH0045G)

Pins 9 and 12 have no internal connection whatever and thus need not be used. In some critical low current applications there may be an advantage to running a guard conductor between the inputs and the adjacent pins to intercept stray leakage currents. Pins 9 and 12 may be connected to this guard to simplify the PC board layout and allow the guard to continue under the device. (See AN-63 for further discussion of guarding techniques.)

NULL AND SPAN ADJUSTMENTS

Most applications of the LH0045 will require potentiometers to trim the initial tolerances of the sensor, the external resistors and the LH0045 itself. The preferred adjustment procedure is to stimulate the sensor, alternating between two known values, such as zero and full scale. The span and null are adjusted by monitoring the output current on a chart recorder, meter, or oscilloscope. A full scale stimulus is applied to the sensor and the span potentiometer adjusted for the desired full scale. Then, to adjust the null, apply a zero percent signal to the sensor and adjust the null potentiometer for the desired zero percent current indication.

If it is impractical to cycle the sensor during the calibration procedure, the signal may be simulated electrically with two cautions: 1) the calibration signal must be floating and 2) the calibration thus achieved does not account for sensor inaccuracies and/or errors in the signal generator.

SENSOR SELECTION

Generally it is easiest to use an insulated sensor. If it is necessary to use a grounded sensor, the power supply must be isolated from chassis ground to avoid extraneous circulating currents.

DESIGN EXAMPLE

There are numerous circuit configurations that may be utilized with the LH0045. The following is intended as a general design example which may be extended to specific cases.

Circuit Requirements

Output Characteristics

a. 0% = 4.0 mA (NULL)

b. 100% = 20 mA (SPAN = 16 mA)

c. Supply Voltage = 24V

Input (Sensor) Characteristics

a. V_{IN} = 100 mV (Full Scale)

b. V_{IN} = 0 mV (Zero Scale)

c. Source Impedance $\leq$ 1.0Ω

General Characteristics

a. $0°C \leq T_A \leq +75°C$

b. Overall Accuracy $\leq$ 0.5%

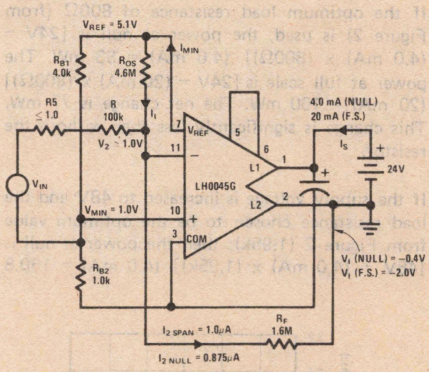

FIGURE 4. Design Example Circuit

Selection of R_F

Input bias current to the LH0045C is guaranteed less than 10 nA. Furthermore, the change in I_B over the temperature range of interest is typically under 1.0 nA. If $I_{2\,SPAN}$ is selected to be 1.0μA (1000 ΔI_B) errors due to $\Delta I_B/\Delta T$ will be less than 0.1%. For SPAN = 16 mA.

$$V_{SPAN} = \Delta V_1 = -(16\,mA)(R9) = -1.6V$$

applications information (con't)

where R9 = Internal Current Set Resistor = 100Ω
For $I_{2\ SPAN}$ = 1.0μA,

$$R_F = \frac{V_{SPAN}}{I_{2\ SPAN}} = \frac{-1.6V}{1.0\mu A} = 1.6M$$

$$R_F = 1.6\ M\Omega$$

Selection of R_{B1} and R_{B2}

The minimum input common mode voltage, V_{MIN} required at the pin 10 input of A_2 is 1.0V. Furthermore, the maximum open loop supply current (I_{SOL}) drawn by the LH0045 is 3.0 mA. That leaves I_{MIN} = 4.0 mA − 3.0 mA = 1.0 mA left to bias the bridge at null. Hence:

$$R_{B2} \geqq \frac{V_{MIN}}{I_{MIN}} = \frac{1.0V}{1.0\ mA} = 1.0\ k\Omega$$

And,

$$\frac{V_{REF}\ R_{B2}}{R_{B1} + R_{B2}} = 1.0V$$

$$R_{B1} = R_{B2}\ \frac{V_{REF} - 1.0V}{1.0V}$$

$$= 1.0k\ (5.1 - 1.0)$$

$$R_{B1} \cong 4.0\ k\Omega$$

Alternatively, an LM113, 1.22V reference diode, or an op amp such as the LM108 may be used to bias the signal amplifier, A_2 as shown in Figure 5. These techniques have the advantage of lowering the impedance seen at pin 10.

Selection of R_{OS}

R_{OS} is selected to provide the null current of 4.0 mA, $V_{1\ NULL}$ = 4.0 mA x 100Ω = 0.4V. From previous calculations we know that V_{MIN} = 1.0V. The voltage pin 11, V_2 is:

$$V_2 = V_{MIN} + V_{OS} \cong V_{MIN}$$

for V_{IN} = 0V

Hence, the current required to generate the null voltage, $I_{2\ NULL}$ is:

$$I_{2\ NULL} = \frac{V_{MIN} - V_{1\ NULL}}{R_F}$$

$$= \frac{1.0V - (-0.4V)}{1.6\ M\Omega} = 0.875\mu A$$

This current must be provided by R_{OS} from V_{REF}; hence:

$$R_{OS} = \frac{V_{REF} - V_{MIN}}{I_{2\ NULL}}$$

The nominal value for V_{REF} is 5.1V, therefore the nominal value for R_{OS} is:

$$\frac{5.1V - 1.0V}{0.875\mu A} \quad \text{or}$$

$$R_{OS} = 4.6\ M\Omega$$

It should be noted however, that the variation of V_{REF} may be as high as 5.9V or as low as 4.3V. Furthermore, the tolerances of R9 (100Ω), R_{B1}, R_{B2}, and the input V_{OS} of A_2 would predict values for R_{OS} as low as 3.98M and as high as 5.43M. The implication is that in the specific case, R_{OS} should be implemented with a pot, of appropriate value, in order to accommodate the tolerances of V_{REF}, R9, V_{OS}, R_{B1}, R_{B2}, etc.

Selection of R

SPAN is required to be 16 mA. From feedback theory and the gain equation we know:

$$I_{SPAN} = V_{IN}\ \frac{R_F}{R} \times \frac{1}{R9}$$

where:

R = total impedance in signal path between pin 10 and pin 11

R9 = Current setting resistor = 100Ω

V_{IN} = Full scale input voltage = 100 mV

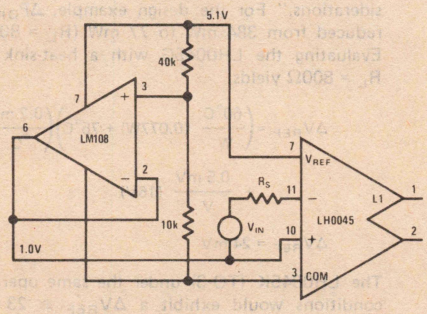

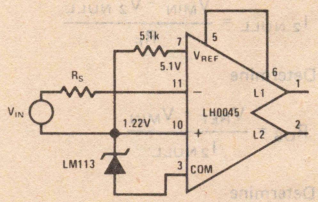

FIGURE 5. Alternate Biasing Techniques

applications information (con't)

$$\therefore R = \frac{(V_{IN})(R_F)}{(I_{SPAN})(R9)}$$

$$R = \frac{(100\text{ mV})(1.6\text{ M}\Omega)}{(16\text{ mA})(100\Omega)}$$

$$R = 100\text{ k}\Omega$$

As before, uncertainties in device parameters might dictate that R_F be made a pot of appropriate value.

Summary of the Steps to Determine External Resistor Values

1. Select $I_{FULL\ SCALE} = I_{NULL} + I_{SPAN}$ for the desired application. (I_{NULL} is frequently 4.0 mA and $I_{FULL\ SCALE}$ is frequently 20 mA.)

2. Select $I_{2\ SPAN}$ so that it is large compared to ΔI_B. 1000 ΔI_B is a good value.

3. Determine $V_{SPAN} = \Delta V_2 = (I_{SPAN})(R9)$.

4. Determine $R_F = (V_{SPAN}/I_{2\ SPAN})$

5. Select

$$R_{B2} \geq \frac{V_{MIN}}{I_{MIN}}$$

$$R_{B2} \geq \frac{1\text{ VOLT}}{I_{NULL} - I_{SOL}}$$

Where:

V_{MIN} = minimum common mode input voltage

I_{MIN} = minimum available bridge current

I_{SOL} = maximum open loop supply current

6. Determine

$$R_{B1} = R_{B2}\frac{V_{REF} - V_{MIN}}{V_{MIN}}$$

7. Determine $V_{2\ NULL} = I_{NULL}\ R9$

8. Determine

$$I_{2\ NULL} = \frac{V_{MIN} - V_{2\ NULL}}{R_F}$$

9. Determine

$$R_{OS} = \frac{V_{REF} - V_{MIN}}{I_{2\ NULL}}$$

10. Determine

$$R = \frac{(V_{IN})(R_F)}{(I_{SPAN})(R9)}$$

Where:

V_{IN} = Sensor full scale output voltage

ERROR BUDGET ANALYSIS

Errors Due to Change in V_{REF} (ΔV_{REF})

There are several factors which could cause a change in V_{REF}. First, as the ambient temperature changes, a V_{REF} drift of ±0.2 mV/°C might be expected. Secondly, supply voltage variations could cause a 0.5 mV/V change in V_{REF}. Lastly, self-heating due to power dissipation variations can cause drift of the reference.

An overall expression for change in V_{REF} is:

$$\Delta V_{REF} = \underbrace{[(\theta)(\Delta P_{DISS}) + \Delta T_A]\frac{\Delta V_{REF}}{\Delta T}}_{\text{Thermal Effects}} + \underbrace{\frac{\Delta V_{REF}}{\Delta V_S}(\Delta V_S)}_{\text{Supply Voltage Effects}}$$

Where:

θ = Thermal resistance, either junction-to-ambient to junction to case

ΔP_{DISS} = Change in avg. power dissipation

ΔT_A = Change in ambient temperature

$\frac{\Delta V_{REF}}{\Delta T}$ = Reference voltage drift (in mV/°C)

$\frac{\Delta V_{REF}}{\Delta V_S}$ = Line regulation of V_{REF}

Several steps may be taken to minimize the bracketed terms in the equation above. For example, operating the LH0045G with a heat-sink reduces the thermal resistance from θ_{JA} = 83°C/W to θ_{JC} = 60°C/W. For the LH0045K (TO-3) θ_{JA} = 40°C/W may be reduced to θ_{JC} = 25°C/W by using a heat sink. The ΔP_{DISS} term may be significantly reduced using the power minimization technique described under "Thermal Considerations." For the design example, ΔP_{DISS} is reduced from 384 mW to 77 mW (R_L = 800Ω.) Evaluating the LH0045G with a heat-sink and R_L = 800Ω yields.

$$\Delta V_{REF} = \left(\frac{60°C}{W}(0.077W) + 75°C\right)\left(\frac{0.2\text{ mV}}{°C}\right) + \frac{0.5\text{ mV}}{V}(16V)$$

$$\Delta V_{REF} = 24\text{ mV}$$

The LH0045K (TO-3) under the same operating conditions would exhibit a $\Delta V_{REF} \cong 23$ mV.

applications information (con't)

An expression for error in the output current due to ΔV_{REF} is:

$$\frac{\Delta I_S}{I_{SPAN}}(\%) = 100\frac{(K)(R_{OS})(\Delta V_{REF}) - (1-K)(\Delta V_{REF})(R_F)}{(R9)(R_{OS})(I_{SPAN})}$$

Where:

ΔV_{REF} = Total change in V_{REF}

$K = \frac{R_{B2}}{R_{B1} + R_{B2}}$

R9 = Current set resistor

I_{SPAN} = Change in output current from 0% to 100%

For example, ΔV_{REF} = 24 mV, K = 0.2, R9 = 100Ω, I_{SPAN} = 16 mA. Hence, a 0.12% worst case error might be expected in output currents due to ΔV_{REF} effects.

Error Due to V_{OS} Drift

One of the primary causes of error in I_S is caused by V_{OS} drift. Drift may be induced either by self heating of the device or ambient temperature changes. The input offset voltage drift, $\Delta V_{OS}/\Delta T$, is nominally 3.3μV/°C per millivolt of initial offset. An expression for the total temperature dependent drift is:

$$\Delta V_{OS} = [(\theta)(\Delta P_{DISS}) + \Delta T_A]\frac{\Delta V_{OS}}{\Delta T}$$

Where:

θ = Thermal resistance either junction-to-ambient or junction-to-case

ΔP_{DISS} = Change in average power dissipation

ΔT_A = Change in ambient temperature

The bracketed term may be minimized by heat sinking and using the power minimization technique described under "Thermal Considerations." For the LH0045G design example, ΔV_{OS} = 0.352 mV under ambient conditions and 0.263 mV using a heat-sink and R_L = 800Ω. Comparable V_{OS} for the LH0045K would be 0.254 mV.

The error in output current due to ΔV_{OS} is:

$$\frac{\Delta I_S}{I_{SPAN}}(\text{in }\%) = 100 \times \frac{\Delta V_{OS}}{V_{IN\ (FULL\ SCALE)}}$$

$$= 100 \times \frac{R_F}{(R)(R9)(I_{SPAN})}$$

For the design example, ΔV_{OS} = 0.263 mV, V_{IN} (Full Scale) = 100 mV. Hence, 0.26 mV ÷ 100 mV or 0.26% worst case error could be expected in output current effects.

Errors Due to Changes in R9

The temperature coefficient of R9 (TCR) will produce errors in the output current. Changes in R9 may be caused by self-heating of the device or by ambient temperature changes.

$$\frac{\Delta I_S}{I_{SPAN}}(\text{in }\%) = 100\frac{\Delta R9}{\Delta T}(\theta P_{DISS} + \Delta T_A)$$

Where:

θ = Thermal resistance either from junction-to-ambient or junction-to-case

ΔP_{DISS} = Change in average power dissipation

ΔT_A = Change in ambient temperature

$\frac{\Delta R9}{\Delta T}$ = TCR of R9

Using the LH0045G design example, ΔR9/ΔT = 0.03%/°C, hence a 3.2% worst case error in output current might be expected for operation without a heat sink over the temperature range.

Heat sinking the device and using R_L = 800Ω, reduces $\Delta I_S/I_{SPAN}$ to 2.3%. Comparable error for the LH0045K would also be about 2.3%.

The error analysis indicates that the internal current set resistor, R9 is inadequate to satisfy high accuracy design criterion. In these instances, an external 100Ω resistor should be substituted for R9.

Obviously, the TCR of the resistor should be low. Metal film or wire-wound resistors are the best choice offering TCR's less than 10 ppm/°C versus 50 ppm/°C typical drift for R9.

External Causes of Error

The components external to the LH0045 are also critical in determining errors. Specifically, the composition of resistors R_{B1}, R_{OS}, R_F, R, etc. in the design example will influence both drift and long term stability.

In particular, resistors and potentiometers of wire wound construction are recommended. Also, metal-film resistors with low TCR (≤ 10 ppm/°C) may be used for fixed resistor applications.

applications information (con't)

Error Analysis Summary

The overall errors attributable to the LH0045 may be minimized using heat sinking, and utilization of an external load resistor. Although R_L reduces the compliance of the circuit, its use is generally advisable in precision applications. External components should be selected for low TCR and long-term stability.

The design example errors, using an external 100Ω wire wound resistor for R9 equal:

$$\frac{\Delta I_S}{I_{SPAN}} = \underbrace{0.12\%}_{\Delta V_{REF}} + \underbrace{0.26\%}_{\Delta V_{OS}} + \underbrace{0.08\%}_{\Delta R9} = 0.46\%$$

SOCKETS AND HEAT SINKS

Mounting sockets, test sockets, and heat sinks are available for the G package and K package.

The following or their equivalents are recommended:

Sockets:

G – 12 lead TO-8: Barnes Corp. #MGX-12
Textool #212-100-323

K – 8 lead TO-3: Keystone Elec. (N.Y.) #4626 or #4627

Heat Sinks

G – 12 lead TO-8: Thermalloy #2240A
Wakefield #215-CB

K – 8 lead TO-3: IERC #LAIC 3B4V

definition of terms

Input Offset Voltage, V_{OS}: The voltage which must be applied between the input terminals through equal resistances to obtain 4.0 mA of supply (output) current.

Input Bias Current, I_B: The average of the two input currents.

Input Offset Current, I_{OS}: The difference in the current into the two input terminals when the supply (output) current is 4.0 mA.

Input Resistance, R_{IN}: The ratio of the change in input voltage to the change in input current at either input with the other input connected to 1.0 Vdc.

Open Loop Transconductance, g_{MOL}: The ratio of the supply (output) current SPAN to the input voltage required to produce that SPAN.

Open Loop Output Resistance, R_{OUT}: The ratio of a specified supply (output) voltage change to the resulting change in supply (output) current at the specified current level.

Common Mode Rejection Ratio, CMRR: The ratio of the change in input offset voltage to the peak-to-peak input voltage range.

Power Supply Rejection Ratio, PSRR: The ratio of the change in input offset voltage to the change in supply (output) voltage producing it.

Input Voltage Range, V_{IN}: The range of voltages on the input terminals for which the device operates within specifications.

Open Loop Supply Current, I_S: The supply current required with the signal amplifier A_2 biased off (inverting input positive, non-inverting input negative) and no load on the V_{REF} terminal.

This represents a measure of the minimum low end signal current.

Reference Voltage Line Regulation, $\Delta V_{REF}/\Delta V_S$: The ratio of the change in V_{REF} to the peak-to-peak change in supply (output) voltage producing it.

Reference Voltage Load Regulation, $\Delta V_{REF}/\Delta I_{REF}$: The change in V_{REF} for a stipulated change in I_{REF}.

National Semiconductor

Amplifiers

LH0061/LH0061C 0.5 Amp Wide Band Operational Amplifier

general description

The LH0061/LH0061C is a wide band, high speed, operational amplifier capable of supplying currents in excess of 0.5 ampere at voltage levels of ±12V. Output short circuit protection is set by external resistors, and compensation is accomplished with a single external capacitor. With a suitable heat sink the device is rated at 20 Watts.

The wide bandwidth and high output power capabilities of the LH0061/LH0061C make it ideal for such applications as AC servos, deflection yoke drivers, capstan drivers, and audio amplifiers. The LH0061 is guaranteed over the temperature range −55°C to +125°C; whereas, the LH0061C is guaranteed from −25°C to +85°C.

features

- Output current — 0.5 Amp
- Wide large signal bandwidth — 1 MHz
- High slew rate — 70V/μs
- Low standby power — 240 mW
- Low input current — 300 nA Max

schematic and connection diagrams

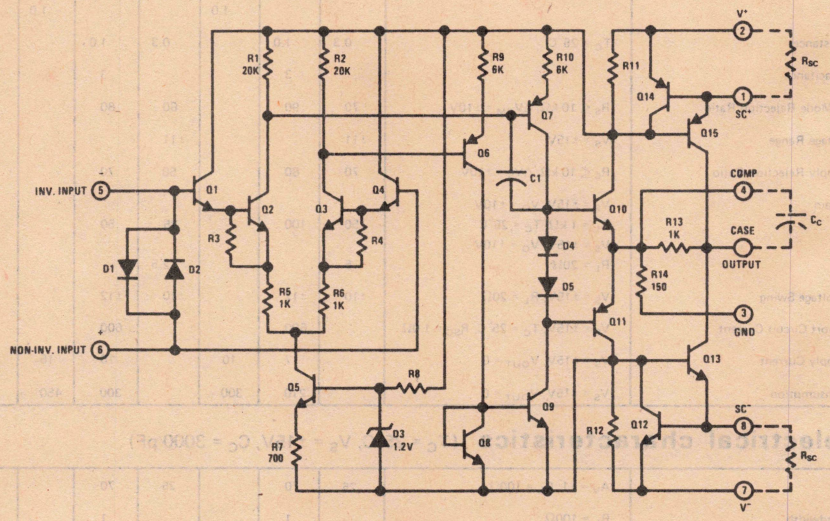

TO-3 Package

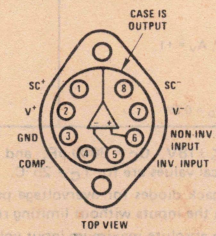

Order Numbers:

LH0061K (−55°C to +125°C)
LH0061CK (−25°C to +85°C)
See Package K08A

absolute maximum ratings

Supply Voltage	±18V
Power Dissipation	See Curve
Differential Input Current (Note 2)	±10 mA
Input Voltage (Note 3)	±15V
Peak Output Current	2A
Output Short Circuit Duration (Note 4)	Continuous
Operating Temperature Range LH0061	−55°C to +125°C
LH0061C	−25°C to +85°C
Storage Temperature Range	−65°C to +150°C
Lead Temperature (Soldering, 10 sec)	300°C

dc electrical characteristics (Note 1)

PARAMETER	CONDITIONS	LIMITS						UNITS
		LH0061			LH0061C			
		MIN	TYP	MAX	MIN	TYP	MAX	
Input Offset Voltage	$R_S \leq 10\ k\Omega$, $T_C = 25°C$, $V_S = \pm15V$		1.0	4.0		3.0	10	mV
	$R_S \leq 10\ k\Omega$, $V_S = \pm15V$			6.0			15	mV
Voltage Drift with Temperature	$R_S \leq 10\ k\Omega$		5			5		μV/°C
Offset Voltage Change with Output Power			5			5		μV/watt
Input Offset Current	$T_C = 25°C$		30	100		50	200	nA
				300			500	nA
Offset Current Drift with Temperature			1			1		nA/°C
Input Bias Current	$T_C = 25°C$		100	300		200	500	nA
				1.0			1.0	μA
Input Resistance	$T_C = 25°C$	0.3	1.0		0.3	1.0		MΩ
Input Capacitance			3			3		pF
Common Mode Rejection Ratio	$R_S \leq 10\ k\Omega$, $\Delta V_{CM} = \pm10V$	70	90		60	80		dB
Input Voltage Range	$V_S = \pm15V$	±11			±11			V
Power Supply Rejection Ratio	$R_S \leq 10\ k\Omega$, $\Delta V_S = \pm10V$	70	80		50	70		dB
Voltage Gain	$V_S = \pm15V$, $V_O = \pm10V$, $R_L = 1\ k\Omega$, $T_C = 25°C$	50	100		25	50		V/mV
	$V_S = \pm15V$, $V_O = \pm10V$, $R_L = 20\Omega$	5			2.5			V/mV
Output Voltage Swing	$V_S = \pm15V$, $R_L = 20\Omega$	±10	±12		±10	±12		V
Output Short Circuit Current	$V_S = \pm15V$, $T_C = 25°C$, $R_{SC} = 1.0\Omega$		600			600		mA
Power Supply Current	$V_S = \pm15V$, $V_{OUT} = 0$		7	10		10	15	mA
Power Consumption	$V_S = \pm15V$, $V_{OUT} = 0$		210	300		300	450	mW

ac electrical characteristics ($T_C = 25°C$, $V_S = \pm15V$, $C_C = 3000$ pF)

Slew Rate	$A_V = +1$, $R_L = 100\Omega$	25	70		25	70		V/μs
Power Bandwidth	$R_L = 100\Omega$		1			1		MHz
Small Signal Transient Response			30			30		ns
Small Signal Overshoot			5	20		10	30	%
Settling Time (0.1%)	$\Delta V_{IN} = 10V$, $A_V = +1$		0.8			0.8		μs
Overload Recovery Time			1			1		μs
Harmonic Distortion	f = 1 kHz, $P_O = 0.5W$		0.2			0.2		%

Note 1: Specifications apply for $\pm5V \leq V_S \leq \pm18V$, $C_C = 3000$ pF, and $-55°C \leq T_C \leq +125°C$ for the LH0061K and $-25°C \leq T_C \leq +85°C$ for the LH0061CK. Typical values are for $T_C = 25°C$.

Note 2: The inputs are shunted with back-to-back diodes for overvoltage protection. Excessive current will flow if a differential voltage in excess of 1V is applied between the inputs without limiting resistors.

Note 3: For supply voltages less than ±15V, the absolute maximum input voltage is equal to the supply voltage.

Note 4: Rating applies as long as package power rating is not exceeded.

typical performance characteristics

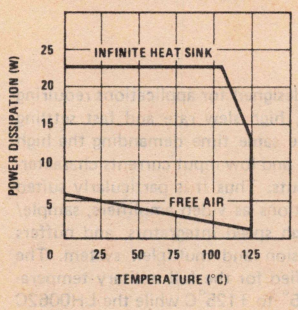

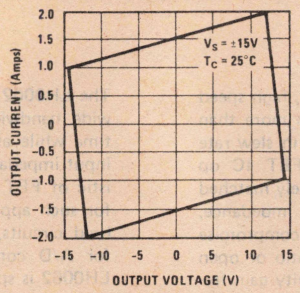

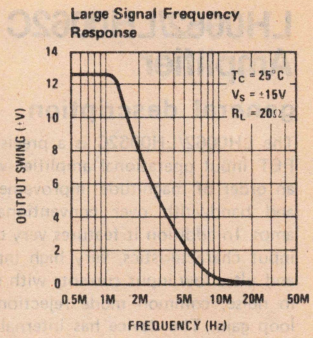

typical applications

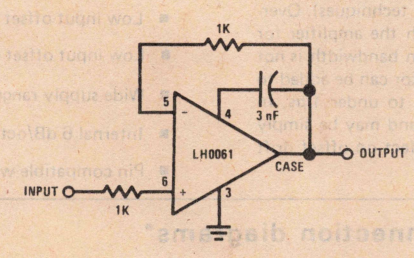

Unity Gain Driver

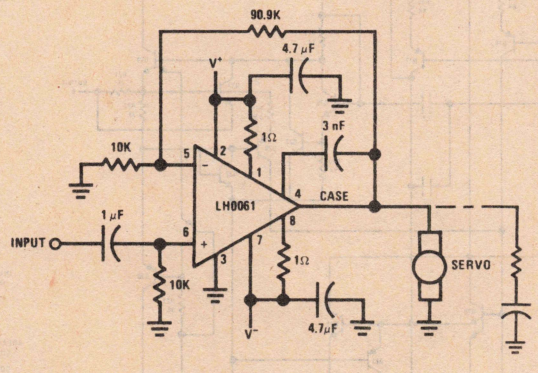

AC Servo Amplifier

National Semiconductor

LH0062/LH0062C High Speed FET Operational Amplifier

general description

The LH0062/LH0062C is a precision, high speed FET input operational amplifier with more than an order of magnitude improvement in slew rate and bandwidth over conventional FET IC op amps. In addition it features very closely matched input characteristics, very high input impedance, and ultra low input currents with no compromise in noise, common mode rejection ratio or open loop gain. The device has internal unity gain frequency compensation, thus assuring stability in all normal applications. This considerably simplifies its application, since no external components are necessary for operation. However, unlike most internally compensated amplifiers, external frequency compensation may be added for optimum performance. For inverting applications, feed-forward compensation will boost the slew rate to over 120 V/μs and almost double the bandwidth. (See LB-2, LB-14, and LB-17 for discussions of the application of feed-forward techniques). Over-compensation can be used with the amplifier for greater stability when maximum bandwidth is not needed. Further, a single capacitor can be added to reduce the 0.1% settling time to under 1 μs. In addition it is free of latch-up and may be simply offset nulled with negligible effect on offset drift or CMRR.

The LH0062 is designed for applications requiring wide bandwidth, high slew rate and fast settling time while at the same time demanding the high input impedance and low input currents characteristic of FET inputs. Thus it is particularly suited for such applications as video amplifiers, sample/hold circuits, high speed integrators, and buffers for A/D conversion and multiplex system. The LH0062 is specified for the full military temperature range of −55° to +125°C while the LH0062C is specified to operate over a −25°C to +85°C temperature range.

features

- High slew rate — 70 V/μs
- Wide bandwidth — 15 MHz
- Settling time (0.1%) — 1μs
- Low input offset voltage — 2 mV
- Low input offset current — 1 pA
- Wide supply range — ±5V to ±20V
- Internal 6 dB/octave frequency compensation
- Pin compatible with std IC op amps (TO-5 pkg)

schematic and connection diagrams*

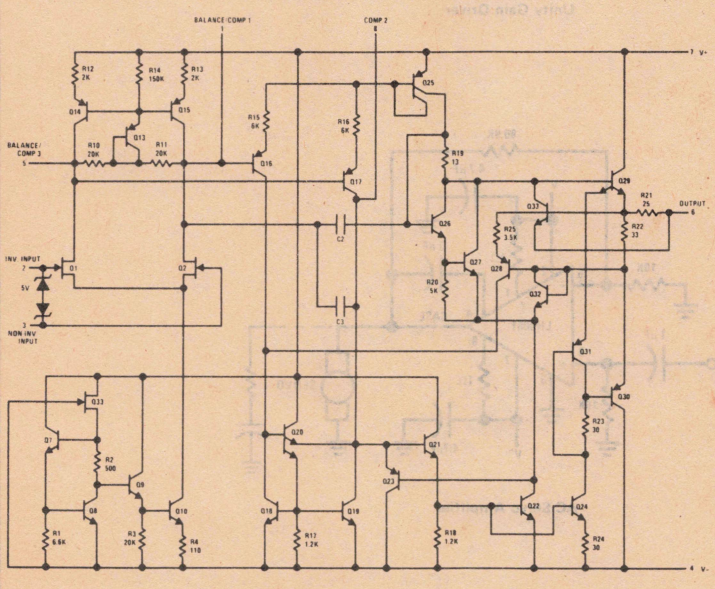

*Pin Numbers Shown for TO-5 Package

Metal Can Package

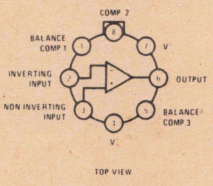

Order Number
LH0062H or LH0062CH
See Package H08A

Dual-In-Line Package

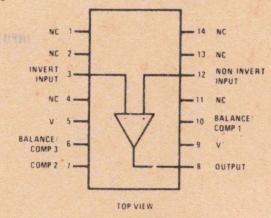

Order Number
LH0062D or LH0062CD
See Package D14E

absolute maximum ratings

Supply Voltage	±20V	Operating Temperature	
Power Dissipation (see graph)	500 mW	LH0062,	−55°C to +125°C
Input Voltage (Note 1)	±5V	LH0062C,	−25°C to +85°C
Differential Input Voltage (Note 2)	±30V	Storage Temperature Range	−65°C to +150°C
Short Circuit Duration	Continuous	Lead Temperature (Soldering, 10 sec)	300°C

dc electrical characteristics (Note 3)

PARAMETER	CONDITIONS	LIMITS						UNITS
		LH0062			LH0062C			
		MIN	TYP	MAX	MIN	TYP	MAX	
Input Offset Voltage	$R_S \leq 100\ k\Omega$; $T_A = 25°C$		2	5		10	15	mV
	$R_S \leq 100\ k\Omega$			7			20	mV
Temperature Coefficient of Input Offset Voltage	$R_S \leq 100\ k\Omega$		5	25		10	35	μV/°C
Offset Voltage Drift with Time			4			5		μV/week
Input Offset Current	$T_A = 25°C$		0.2	2		1	5	pA
				2			0.2	nA
Temperature Coefficient of Input Offset Current		Doubles every 10°C			Doubles every 10°C			
Offset Current Drift with Time			0.1			0.1		pA/week
Input Bias Current	$T_A = 25°C$		5	10		10	65	pA
				10			2	nA
Temperature Coefficient of Input Bias Current		Doubles every 10°C			Doubles every 10°C			
Differential Input Resistance			10^{12}			10^{12}		Ω
Common Mode Input Resistance			10^{12}			10^{12}		Ω
Input Capacitance			4			4		pF
Input Voltage Range	$V_S = \pm 15V$	±10	±12		±10	±12		V
Common Mode Rejection Ratio	$R_S \leq 10\ k\Omega$, $V_{IN} = \pm 10V$	80	90		70	90		dB
Supply Voltage Rejection Ratio	$R_S \leq 10\ k\Omega$, $\pm 5V \leq V_S \leq \pm 15V$	80	90		70	90		dB
Large Signal Voltage Gain	$R_L = 2\ k\Omega$, $V_{OUT} = \pm 10V$, $T_A = 25°C$, $V_S = \pm 15V$	50	200		25	160		V/mV
	$R_L = 2\ k\Omega$, $V_{OUT} = \pm 10V$, $V_S = \pm 15V$	25			25			V/mV
Output Voltage Swing	$R_L = 2\ k\Omega$, $T_A = 25°C$, $V_S = \pm 15V$	±12	±13		±12	±13		V
	$R_L = 2\ k\Omega$, $V_S = \pm 15V$	±10			±10			V
Output Current Swing	$V_{OUT} = \pm 10V$, $T_A = 25°C$	±10	±15		±10	±15		mA
Output Resistance			75			75		Ω
Output Short Circuit Current	$T_A = 25°C$		25			25		mA
Supply Current	$V_S = \pm 15V$		5	8		7	12	mA
Power Consumption	$V_S = \pm 15V$			240			360	mW

ac electrical characteristics ($T_A = 25°C$, $V_S = \pm 15V$)

PARAMETER	CONDITIONS	LIMITS						UNITS
		LH0062			LH0062C			
		MIN	TYP	MAX	MIN	TYP	MAX	
Slew Rate	Voltage Follower	50	70		50	70		V/μs
Large Signal Bandwidth	Voltage Follower		2			2		MHz
Small Signal Bandwidth			15			15		MHz
Rise Time			25			25		ns
Overshoot			10			15		%
Settling Time (0.1%)	$\Delta V_{IN} = 10V$		1			1		μs
Overload Recovery			0.9			0.9		μs
Input Noise Voltage	$R_S = 10\ k\Omega$, $f_o = 10\ Hz$		150			150		$nV/\sqrt{Hz}$
Input Noise Voltage	$R_S = 10\ k\Omega$, $f_o = 100\ Hz$		55			55		$nV/\sqrt{Hz}$
Input Noise Voltage	$R_S = 10\ k\Omega$, $f_o = 1\ kHz$		35			35		$nV/\sqrt{Hz}$
Input Noise Voltage	$R_S = 10\ k\Omega$, $f_o = 10\ kHz$		30			30		$nV/\sqrt{Hz}$
Input Noise Voltage	BW = 10 Hz to 10 kHz, $R_S = 10\ k\Omega$		12			12		μVrms
Input Noise Current	BW = 10 Hz to 10 kHz		<.1			<.1		pArms

Note 1: For supply voltages less than ±15V, the absolute maximum input voltage is equal to the supply voltage.

Note 2: Inputs are protected from excessive voltages by back-to-back diodes. Input currents should be limited to 1 mA.

Note 3: Unless otherwise specified, these specifications apply for $\pm 5V < V_S < \pm 20V$ and $-55°C < T_A < +125°C$ for the LH0062 and $-25°C \leq T_A \leq +85°C$ for LH0062C. Typical values are given for $T_A = 25°C$. Power supplies should be bypassed with 0.1 μF ceramic capacitors.

typical performance characteristics

Maximum Power Dissipation

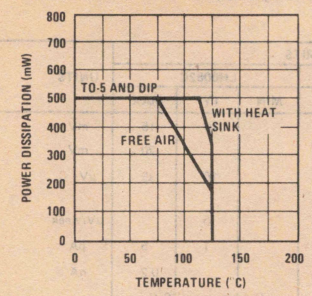

Input Offset Current vs Temperature

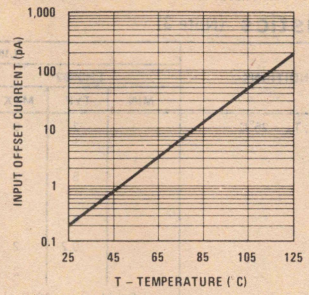

Input Bias Current vs Temperature

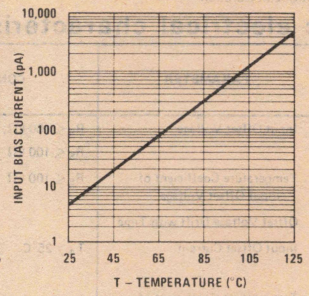

Large Signal Frequency Response

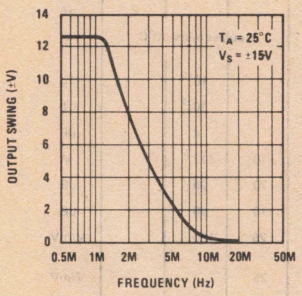

Voltage Follower Pulse Response

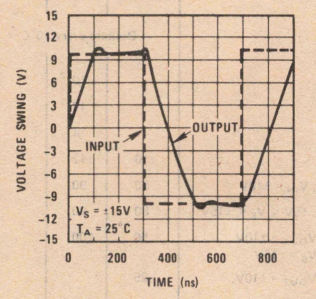

Open Loop Frequency Response

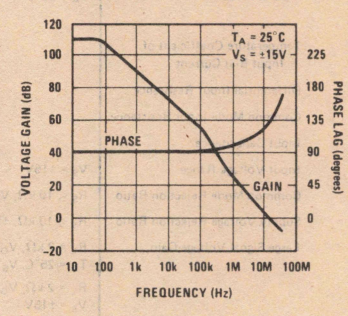

Large Signal Frequency Response

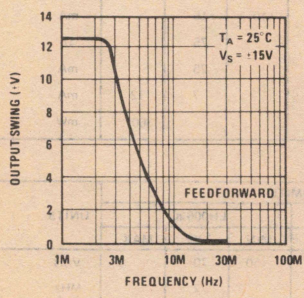

Inverter Pulse Response

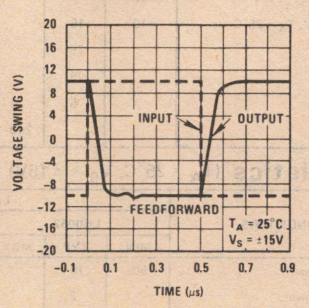

Open Loop Frequency Response

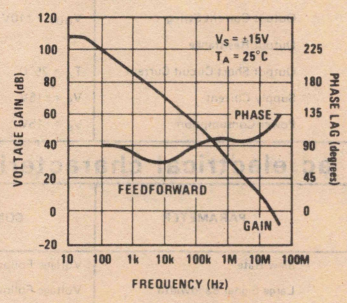

Inverter Settling Time

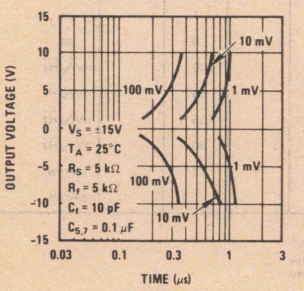

Unity Gain Bandwidth

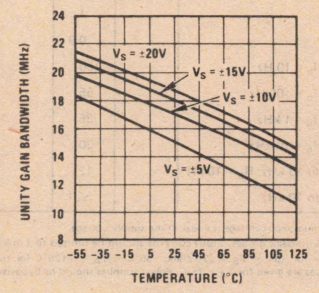

Voltage Follower Slew Rate

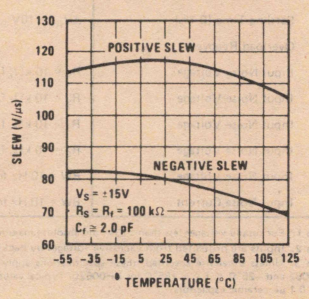

typical performance characteristics (con't)

Input Bias Current vs Input Voltage

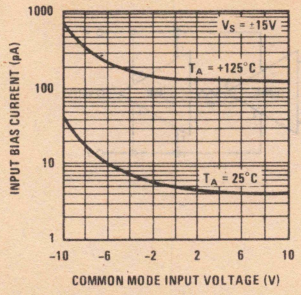

Total Input Noise Voltage* vs Frequency

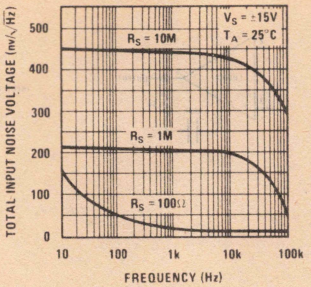

Total Input Noise Voltage* vs Source Resistance

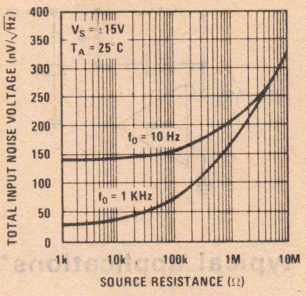

Voltage Gain

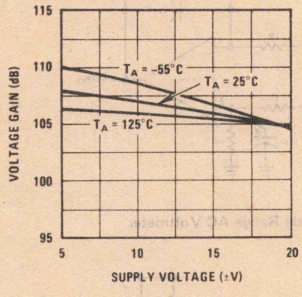

Common Mode Rejection

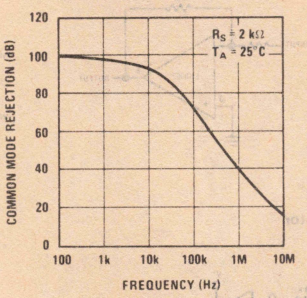

Power Supply Rejection

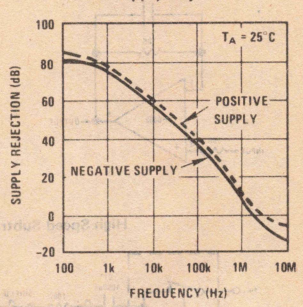

Supply Current

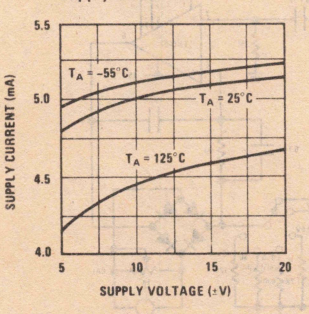

Current Limiting

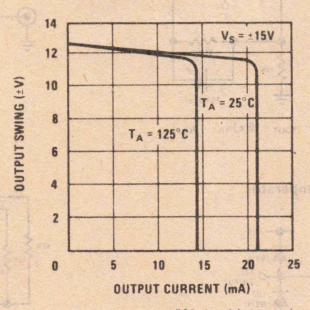

Closed Loop Output Impedance

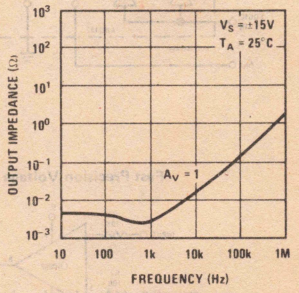

*Noise Voltage Includes Contribution from Source Resistance

auxiliary circuits

Feedforward Compensation for Greater Inverting Slew Rate†

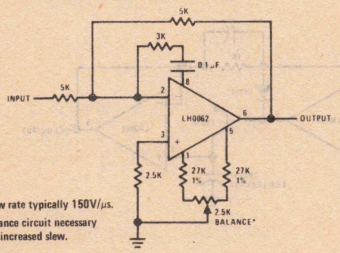

†Slew rate typically 150V/μs.
*Balance circuit necessary for increased slew.

Offset Balancing

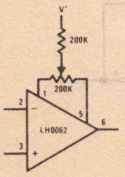

Compensation for Minimum Settling† Time

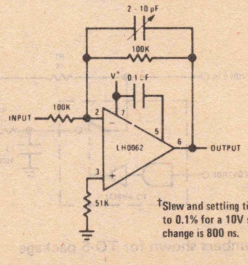

†Slew and settling time to 0.1% for a 10V step change is 800 ns.

auxiliary circuits (con't)

Isolating Large Capacitive Loads

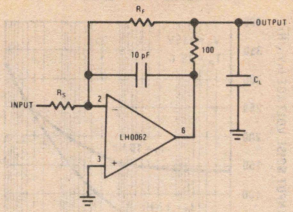

Overcompensation

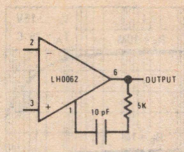

Boosting Output Drive to ±100 mA

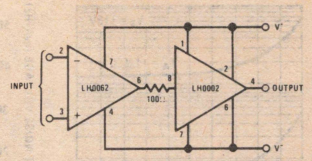

typical applications*

Fast Voltage Follower

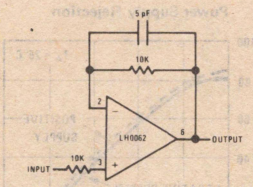

Fast Summing Amplifier

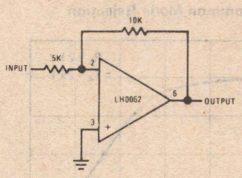

Differential Amplifier

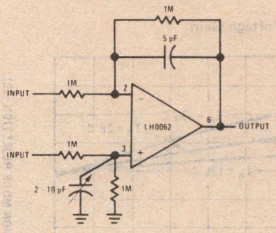

High Speed Subtractor

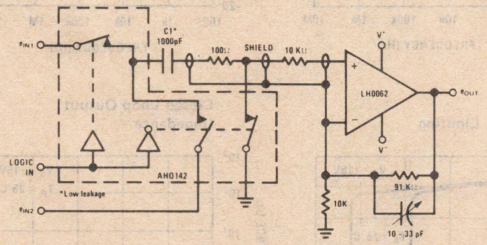

$e_{OUT} = 10 \times (e_{IN1} - e_{IN2})$

Wide Range AC Voltmeter

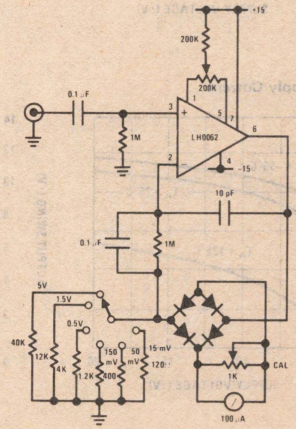

Fast Precision Voltage Comparator

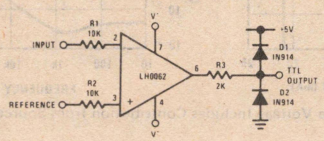

Video DC Restoring Amplifier

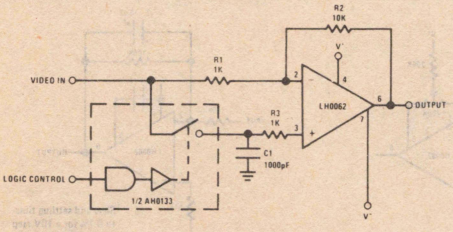

High Speed Positive Peak Detector

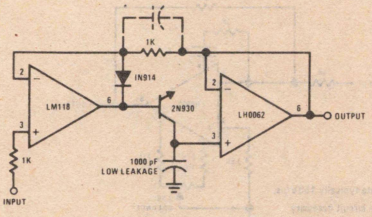

*Pin numbers shown for TO-5 package

typical applications* (con't)

Precision Integrator

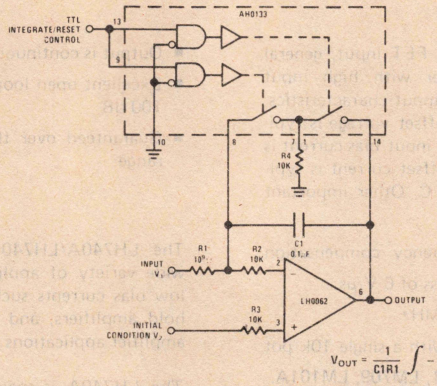

$$V_{OUT} = \frac{1}{C1R1} \int -V_1\,dt + V_2$$

*Pin numbers shown for TO-5 package

Precision Wide Range Current to Period Converter

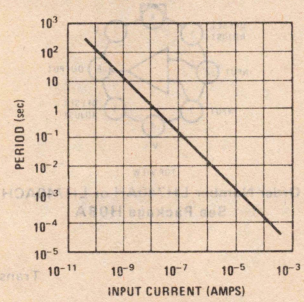

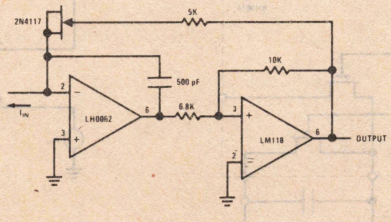

National Semiconductor

LH740A/LH740AC FET Input Operational Amplifier

general description

The LH740A/LH740AC is a FET input, general purpose operational amplifier with high input impedance, closely matched input characteristics, and good slew rates. Input offset voltage is typically 10.0 mV at 25°C, while input bias current is less than 100 pA at 25°C. Offset current is typically less than 40 pA at 25°C. Other important design features include:

- Internal 6 dB/octave frequency compensation
- Unity gain slew rate in excess of 6 V/μs
- Unity gain bandwidth of 1 MHz
- Input offset is adjustable with a single 10k pot
- Pin compatible with LM741, LM709, LM101A.
- Excellent offset current match over temperature, typically 100 pA
- Output is continuously short-circuit proof
- Excellent open loop gain, typically in excess of 100 dB
- Guaranteed over the full military temperature range

The LH740A/LH740AC is intended to fulfill a wide variety of applications requiring extremely low bias currents such as integrators, sample and hold amplifiers, and general purpose operational amplifier applications.

The LH740A is specified for operation over the −55°C to +125°C military temperature range. The LH740AC is specified for operation over the 0°C to +85°C temperature range.

connection diagram

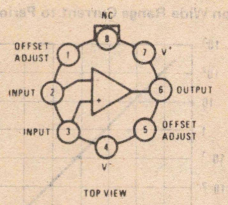

Order Number LH740AH or LH740ACH
See Package H08A

typical applications

Integrator

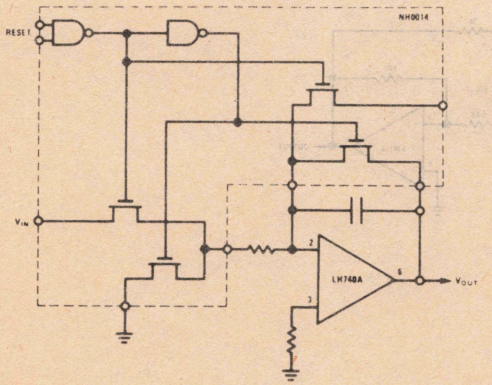

Transient Response

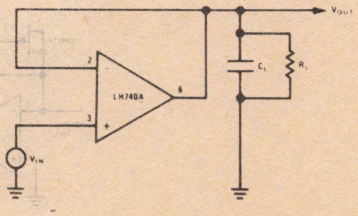

Offset Null

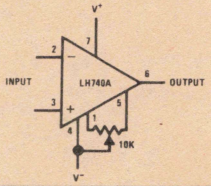

absolute maximum ratings

Supply Voltage		±22V
Maximum Power Dissipation		500 mW
Differential Input Voltage		±5V
Input Voltage		±15V
Short Circuit Duration		Continuous
Operating Temperature Range	LH740A	−55°C to +125°C
	LH740AC	0°C to +85°C
Storage Temperature Range		−65°C to +150°C
Lead Temperature (soldering, 10 sec.)		300°C

electrical characteristics (Note 1) (V_S = ±15V, T_A = 25°C unless otherwise noted)

PARAMETER	CONDITIONS	LH740A MIN	LH740A TYP	LH740A MAX	LH740AC MIN	LH740AC TYP	LH740AC MAX	UNITS
Input Offset Voltage	$R_S \leq 100\ k\Omega$		10	15		10	20	mV
Input Offset Current	T_J = 25°C (Note 2)		40	100		60	150	pA
Input Current (either input)	T_J = 25°C (Note 2)		100	200		100	500	pA
Input Resistance	T_J = 25°C (Note 2)		1,000,000			1,000,000		MΩ
Large Signal Voltage Gain	$R_L \geq 2\ k\Omega$, V_{OUT} = ±10V	50,000	100,000		50,000	100,000		V/V
Output Resistance			75			75		Ω
Output Short-Circuit Current			20			20		mA
Common Mode Rejection Ratio		80			80			dB
Supply Voltage Rejection Ratio		80			80			dB
Supply Current			3.0	4.0		3.0	4.0	mA
Slew Rate			6.0			6.0		V/μs
Unity Gain Bandwidth			1.0			1.0		MHz
Transient Response (Unity Gain)	$C_L \leq 100$ pF, $R_L = 2\ k\Omega$, V_{IN} = 100 mV							
Risetime			110			300		ns
Overshoot			10	20		10		%
(These specifications apply for −55°C ≤ T_A ≤ 125°C for the LH740A and 0°C ≤ T_A ≤ 85°C for the LH740AC unless otherwise noted.)								
Input Voltage Range		±12			±12			V
Common Mode Rejection Ratio		80			80			dB
Supply Voltage Rejection Ratio		80			80			dB
Large Signal Voltage Gain		40,000			40,000			V/V
Output Voltage Swing	$R_L \geq 10\ k\Omega$	±12	±14		±12	±14		V
	$R_L \geq 2\ k\Omega$	±10	±13		±10	±13		V
Input Offset Voltage			15	20		30		mV
Input Offset Current			100	500		60	500	pA
Input Current (either input)			2.5	4.0		1.1	5.0	nA
Offset Voltage Drift	$R_S \leq 100K$		5.0			5.0		μV/°C

Note 1: For supply voltages less than ±10V, the absolute maximum input voltage is equal to the supply voltage.

Note 2: Due to high speed automatic testing, these parameters are correlated to junction temperature.

typical performance characteristics

Maximum Power Dissipation

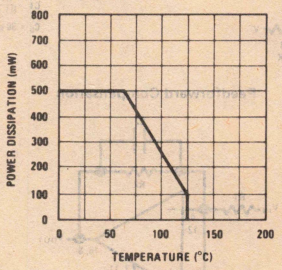

Open Loop Frequency Response

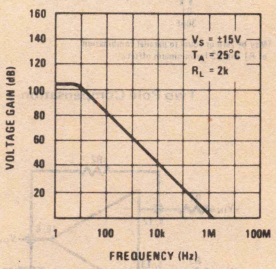

National Semiconductor

LH2101A/LH2201A/LH2301A Dual High Performance Op Amp

general description

The LH2101A series of dual operational amplifiers are two LM101A type op amps in a single hermetic package. Featuring all the same performance characteristics of the single, these duals offer in addition closer thermal tracking, lower weight, reduced insertion cost, and smaller size than two singles. For additional information, see the LM101A data sheet and National's Linear Application Handbook.

The LH2101A is specified for operation over the −55°C to +125°C military temperature range. The LH2201A is specified for operation over the −25°C to +85°C temperature range. The LH2301A is specified for operation over the 0°C to +70°C temperature range.

features

- Low offset voltage
- Low offset current
- Guaranteed drift characteristics
- Offsets guaranteed over entire common mode and supply voltage ranges
- Slew rate of 10V/μs as a summing amplifier

connection diagram

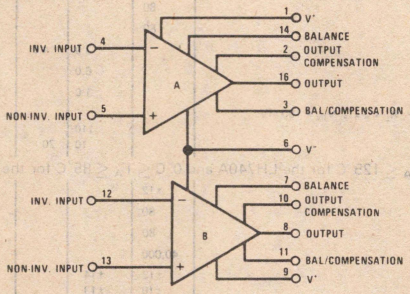

Order Number LH2101AD or LH2201AD or LH2301AD
See Package D16C

auxiliary circuits

Inverting Amplifier with Balancing Circuit

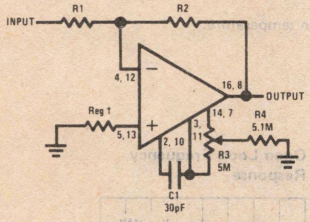

†May be zero or equal to parallel combination of R1 and R2 for minimum offset

Alternate Balancing Circuit

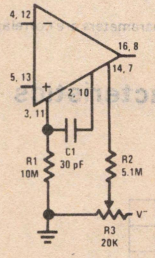

Single Pole Compensation

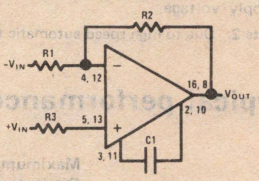

$C1 > \frac{R1\,C_S}{R1 + R2}$

$C_S = 30$ pF

Two Pole Compensation

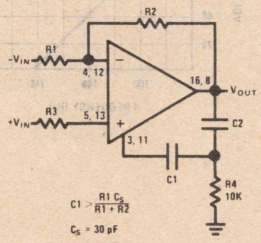

$C1 > \frac{R1\,C_S}{R1 + R2}$

$C_S = 30$ pF

$C2 = 10\,C1$

Feedforward Compensation

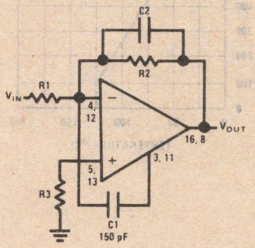

$C2 = \frac{1}{2\pi f_o R2}$

$f_o = 3$ MHz

absolute maximum ratings

Supply Voltage	±22V
Power Dissipation (Note 1)	500 mW
Differential Input Voltage	±30V
Input Voltage (Note 2)	±15V
Output Short-Circuit Duration	Continuous
Operating Temperature Range LH2101A	-55°C to 125°C
LH2201A	-25°C to 85°C
LH2301A	0°C to 70°C
Storage Temperature Range	-65°C to 150°C
Lead Temperature (Soldering, 10 sec)	300°C

electrical characteristics each side (Note 3)

PARAMETER	CONDITIONS	LIMITS			UNITS
		LH2101A	LH2201A	LH2301A	
Input Offset Voltage	$T_A = 25°C$, $R_S < 50\ k\Omega$	2.0	2.0	7.5	mV Max
Input Offset Current	$T_A = 25°C$	10	10	50	nA Max
Input Bias Current	$T_A = 25°C$	75	75	250	nA Max
Input Resistance	$T_A = 25°C$	1.5	1.5	0.5	MΩ Min
Supply Current	$T_A = 25°C$, $V_S = \pm 20V$	3.0	3.3	3.0	mA Max
Large Signal Voltage Gain	$T_A = 25°C$, $V_S = \pm 15V$, $V_{OUT} = \pm 10V$, $R_L > 2\ k\Omega$	50	50	25	V/mV Min
Input Offset Voltage	$R_S < 50\ k\Omega$	3.0	3.0	10	mV Max
Average Temperature Coefficient of Input Offset Voltage		15	15	30	μV/°C Max
Input Offset Current		20	20	70	nA Max
Average Temperature Coefficient of Input Offset Current	$25°C < T_A < 125°C$	0.1	0.1	0.3	nA/°C Max
	$-55°C < T_A < 25°C$	0.2	0.2	0.6	nA/°C Max
Input Bias Current		100	100	300	nA Max
Supply Current	$T_A = +125°C$, $V_S = \pm 20V$	2.5	2.5		mA Max
Large Signal Voltage Gain	$V_S = \pm 15V$, $V_{OUT} = \pm 10V$, $R_L > 2\ k\Omega$	25	25	15	V/mV Min
Output Voltage Swing	$V_S = \pm 15V$, $R_L = 10\ k\Omega$	±12	±12	±12	V Min
	$R_L = 2\ k\Omega$	±10	±10	±10	V Min
Input Voltage Range	$V_S = \pm 20V$	±15	±15	±12	V Min
Common Mode Rejection Ratio	$R_S < 50\ k\Omega$	80	80	70	dB Min
Supply Voltage Rejection Ratio	$R_S < 50\ k\Omega$	80	80	70	dB Min

Note 1: The maximum junction temperature of the LH2101A is 150°C, while that of the LH2201A is 100°C. For operating temperatures of devices in the flat package, the derating is based on a thermal resistance of 185°C/W when mounted on a 1/16-inch-thick epoxy glass board with 0.03-inch-wide, 2-ounce copper conductors. The thermal resistance of the dual-in-line package is 100°C/W, junction to ambient.

Note 2: For supply voltages lens than ±15V, the absolute maximum input voltage is equal to the supply voltage.

Note 3: These specifications apply for $\pm 5V \leq V_S \leq \pm 20V$ and $-55°C \leq T_A \leq 125°C$, unless otherwise specified. With the LH2201A, however, all temperature specifications are limited to $-25°C \leq T_A \leq 85°C$. For the LH2301A these specifications apply for $0°C \leq T_A \leq 70°C$, and $\pm 5V \leq V_S \leq \pm 15V$. Supply current and input voltage range are specified as $V_S = \pm 15V$ for the LH2301A. $C_1 = 30\ pF$ unless otherwise specified.

National Semiconductor

LH2108/LH2208/LH2308, LH2108A/LH2208A/LH2308A Dual Super Beta Op Amp

general description

The LH2108A/LH2208A/LH2308A and LH2108/LH2208/LH2308 series of dual operational amplifiers are two LM108A or LM108 type op amps in a single hermetic package. Featuring all the same performance characteristics of the single device, these duals also offer closer thermal tracking, lower weight, reduced insertion cost, and smaller size than two single devices. For additional information see the LM108A or LM108 data sheet and National's Linear Application Handbook.

The LH2108A/LH2108 is specified for operation over the -55°C to +125°C military temperature range. The LH2208A/LH2208 is specified for operation over the -25°C to +85°C temperature range. The LH2308A/LH2308 is specified for operation over the 0°C to +70°C temperature range.

features

- Low offset current — 50 pA
- Low offset voltage — 0.7 mV
- Low offset voltage — LH2108A 0.3 mV; LH2108 0.7 mV
- Wide input voltage range — ±15V
- Wide operating supply range — ±3V to ±20V

connection diagram

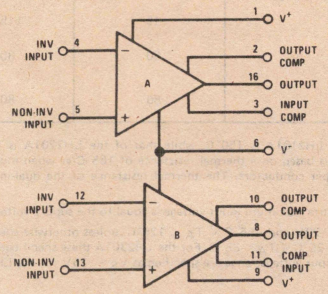

Order Number LH2108AD, LH2208AD, LH2308AD, LH2108D, LH2208D, or LH2308D

See Package D16C

auxiliary circuits

Standard Compensation Circuit

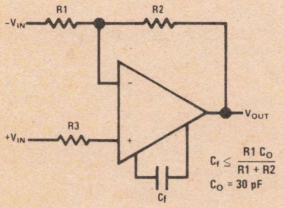

Alternate * Frequency Compensation

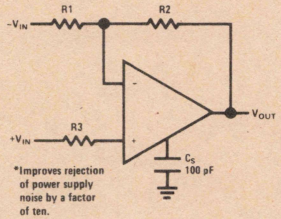

*Improves rejection of power supply noise by a factor of ten.

Feedforward Compensation

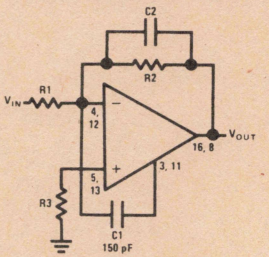

$C2 = \frac{1}{2\pi f_O R2}$

$f_O = 3$ MHz

absolute maximum ratings

Supply Voltage	±20V
Power Dissipation (Note 1)	500 mW
Differential Input Current (Note 2)	±10 mA
Input Voltage (Note 3)	±15V
Output Short Circuit Duration	Continuous
Operating Temperature Range	
LH2108A/LH2108	−55°C to +125°C
LH2208A/LH2208	−25°C to +85°C
LH2308A/LH2308	0°C to +70°C
Storage Temperature Range	−65°C to +150°C
Lead Temperature (Soldering, 10 sec)	300°C

electrical characteristics each side (Note 4)

PARAMETER	CONDITIONS	LIMITS			UNITS
		LH2108	LH2208	LH2308	
Input Offset Voltage	$T_A = 25°C$	2.0	2.0	7.5	mV Max
Input Offset Current	$T_A = 25°C$	0.2	0.2	1.0	nA Max
Input Bias Current	$T_A = 25°C$	2.0	2.0	7.0	nA Max
Input Resistance	$T_A = 25°C$	30	30	10	MΩ Min
Supply Current	$T_A = 25°C$	0.6	0.6	0.8	mA Max
Large Signal Voltage Gain	$T_A = 25°C$ $V_S = \pm15V$ $V_{OUT} = \pm10V$, $R_L \geq 10\ k\Omega$	50	50	25	V/mV Min
Input Offset Voltage		3.0	3.0	10	mV Max
Average Temperature Coefficient of Input Offset Voltage		15	15	30	μV/°C Max
Input Offset Current		0.4	0.4	1.5	nA Max
Average Temperature Coefficient of Input Offset Current		2.5	2.5	10	pA/°C Max
Input Bias Current		3.0	3.0	10	nA Max
Supply Current	$T_A = +125°C$	0.4	0.4	–	mA Max
Large Signal Voltage Gain	$V_S = \pm15V$, $V_{OUT} = \pm10V$ $R_L \geq 10\ k\Omega$	25	25	15	V/mV Min
Output Voltage Swing	$V_S = \pm15V$, $R_L = 10\ k\Omega$	±13	±13	±13	V Min
Input Voltage Range	$V_S = \pm15V$	±13.5	±13.5	±14	V Min
Common Mode Rejection Ratio		85	85	80	dB Min
Supply Voltage Rejection Ratio		80	80	80	dB Min

electrical characteristics each side (Note 4)

PARAMETER	CONDITIONS	LIMITS			UNITS
		LH2108A	LH2208A	LH2308A	
Input Offset Voltage	$T_A = 25°C$	0.5	0.5	0.5	mV Max
Input Offset Current	$T_A = 25°C$	0.2	0.2	1.0	nA Max
Input Bias Current	$T_A = 25°C$	2.0	2.0	7.0	nA Max
Input Resistance	$T_A = 25°C$	30	30	10	MΩ Min
Supply Current	$T_A = 25°C$	0.6	0.6	0.8	mA Max
Large Signal Voltage Gain	$T_A = 25°C$ $V_S = \pm15V$ $V_{OUT} = \pm10V$, $R_L > 10\ k\Omega$	80	80	80	V/mV Min
Input Offset Voltage		1.0	1.0	0.73	mV Max
Average Temperature Coefficient of Input Offset Voltage		5	5	5	μV/°C Max
Input Offset Current		0.4	0.4	1.5	nA Max
Average Temperature Coefficient of Input Offset Current		2.5	2.5	10	pA/°C Max
Input Bias Current		3.0	3.0	10	nA Max
Supply Current	$T_A = +125°C$	0.4	0.4	–	mA Max
Large Signal Voltage Gain	$V_S = \pm15V$, $V_{OUT} = \pm10V$ $R_L > 10\ k\Omega$	40	40	60	V/mV Min
Output Voltage Swing	$V_S = \pm15V$, $R_L = 10\ k\Omega$	±13	±13	±13	V Min
Input Voltage Range	$V_S = \pm15V$	±13.5	±13.5	±14	V Min
Common Mode Rejection Ratio		96	96	96	dB Min
Supply Voltage Rejection Ratio		96	96	96	dB Min

Note 1: The maximum junction temperature of the LH2108A/LH2108 is 150°C, while that of the LH2208A/LH2208 is 100°C and that of the LH2308A/LH2308 is 85°C. For operating devices in the flat package at elevated temperatures, the derating is based on a thermal resistance of 185°C/W when mounted on a 1/16-inch-thick epoxy glass board with 0.03-inch-wide, 2-ounce copper conductors. The thermal resistance of the dual-in-line package is 100°C/W, junction to ambient.

Note 2: The inputs are shunted with back-to-back diodes for overvoltage protection. Therefore, excessive current will flow if a differential input voltage in excess of 1 V is applied between the inputs unless some limiting resistance is used.

Note 3: For supply voltages less than ±15 V, the absolute maximum input voltage is equal to the supply voltage.

Note 4: These specifications apply for $\pm5V \leq V_S \leq \pm20V$ and $-55°C \leq T_A \leq 125°C$, unless otherwise specified. With the LH2208A/LH2208, however, all temperature specifications are limited to $-25°C \leq T_A \leq 85°C$ and with the LH2308A/LH2308 for $\pm5V \leq V_S \leq 15V$ and $0°C \leq T_A \leq 70°C$.

National Semiconductor

LH24250/LH24250C Dual Programmable Micropower Op Amp

general description

The LH24250/LH24250C series of dual programmable micropower operational amplifiers are two LM4250 type op amps in a single hermetic package. Featuring all the same performance characteristics of the LM4250, the LH24250/LH24250C duals also offer closer thermal tracking, lower weight, reduced insertion cost and smaller size than two single devices. For additional information, see the LM4250 data sheet and National's Linear Application Handbook.

features

- ±1V to ±18V power supply operation
- Standby power consumption as low as 20 μW
- Offset current programmable from less than 0.5 nA to 30 nA
- Programmable slew rate
- May be shut-down using standard open collector TTL
- Internally compensated and short circuit proof

connection diagram and auxiliary circuit

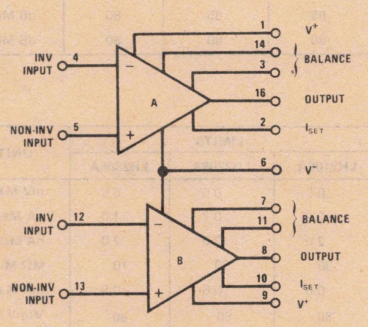

Order Number LH24250D or LH24250CD
See Package D16C

Offset Null Circuit

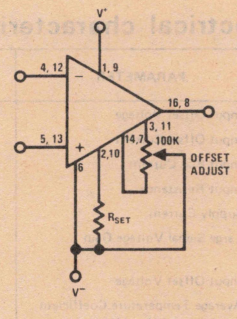

typical quiescent current setting resistor

(Pin 8 to V-)

V_S	10 μA	30 μA	100 μA	300 μA
±1.5	1.5 MΩ	470 kΩ	150 kΩ	
±3	3.3 MΩ	1.1 MΩ	330 kΩ	100 kΩ
±6	7.5 MΩ	2.7 MΩ	750 kΩ	220 kΩ
±9	13 MΩ	4 MΩ	1.3 MΩ	350 kΩ
±12	18 MΩ	5.6 MΩ	1.5 MΩ	510 kΩ
±15	22 MΩ	7.5 MΩ	2.2 MΩ	620 kΩ

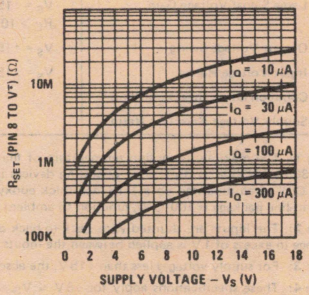

absolute maximum ratings

Supply Voltage	±18V	Operating Temperature Range	
Power Dissipation (Note 1)	500 mW	LH24250	−55°C to +125°C
Differential Input Voltage (Note 2)	±15V	LH24250C	0°C to +70°C
Input Voltage (Note 3)	±15V	Storage Temperature Range	−65°C to +150°C
Output Short Circuit Duration	Continuous	Lead Temperature (Soldering, 10 sec)	300°C

electrical characteristics – each side (Note 4)

PARAMETER	CONDITIONS	LIMITS		UNITS
		LH24250	LH24250C	
Input Offset Voltage	$T_A = 25°C$, $R_S < 100\ k\Omega$	3.0	6.0	mV Max
Input Offset Current	$T_A = 25°C$	5	10	nA Max
Input Bias Current	$T_A = 25°C$	15	30	nA Max
Input Resistance	$T_A = 25°C$	3	3	MΩ Min
Power Consumption	$T_A = 25°C$, $V_O = 0$, $R_{SET} = 2.7\ M\Omega$	480	600	μW Max
Large Signal Voltage Gain	$T_A = 25°C$, $R_L > 10\ k\Omega$	100	75	V/mV Min
Input Offset Voltage	$R_S > 10\ k\Omega$	4.0	7.5	mV Max
Input Offset Current		5	15	nA Max
Input Bias Current		15	50	nA Max
Large Signal Voltage Gain	$R_L > 10\ k\Omega$	50	50	V/mV Min
Output Voltage Swing	$R_L > 10\ k\Omega$, $V_S = \pm 15V$	±10	±10	V Min
Input Voltage Range	$T_A = 25°C$, $V_S = \pm 15V$	±12	±12	V Min
Common Mode Rejection Ratio	$T_A = 25°C$, $R_S < 10\ k\Omega$	70	70	dB Min
Supply Voltage Rejection Ratio	$T_A = 25°C$, $R_S < 10\ k\Omega$	76	76	dB Min

Note 1: Derate linearly 2 mW/°C case temperature above 25°C.

Note 2: This rating applies to maximum voltage differential between input terminals. The maximum input voltage on either input terminal is limited to $+V_S$ up to ±15V.

Note 3: This rating limited to ± supply voltage to a maximum of ±15V.

Note 4: These specifications apply for $V_S = \pm 6V$, $I_q = 30\ \mu A$, and $-55°C \leq T_A \leq +125°C$ unless otherwise specified. With the LH24250C, however, all temperature specifications are limited to $0°C < T_A < 70°C$.

absolute maximum ratings

Supply Voltage	±9V	Operating Temperature Range	
Power Dissipation (Note 1)	200 mW	LH2430	-55°C to +125°C
Differential Input Voltage (Note 2)	±5V	LH2430C	0°C to +70°C
Input Voltage (Note 3)	±15V	Storage Temperature Range	-65°C to +150°C
Output Short Circuit Duration	Continuous	Lead Temperature (Soldering, 10 sec)	300°C

electrical characteristics – each side (Note 4)

PARAMETER	CONDITIONS	LIMITS LH2430	LIMITS LH2430C	UNITS
Input Offset Voltage	$T_A = 25°C$, $R_S = 100\Omega$	3.0	6.0	mV Max
Input Offset Current	$T_A = 25°C$	5	10	nA Max
Input Bias Current	$T_A = 25°C$	15	30	nA Max
Input Resistance	$T_A = 25°C$	2	1.2	MΩ Min
Power Consumption	$T_A = 25°C$, $V_O = 0$, $R_{SET} = 2.7k\Omega$	180	200	mW Max
Large Signal Voltage Gain	$T_A = 25°C$, $R_L \geq 10\ k\Omega$	100	25	V/mV Min
Input Offset Voltage	$R_S = 10\ k\Omega$	4.0	7.5	mV Max
Input Offset Current		5	15	nA Max
Input Bias Current		15	30	nA Max
Large Signal Voltage Gain	$R_L \geq 10\ k\Omega$	50	30	V/mV Min
Output Voltage Swing	$R_L = 10\ k\Omega$, $V_S = \pm 15V$	±10	±10	V Min
Input Voltage Range	$T_A = 25°C$, $V_S = \pm 15V$	±12	±12	V Min
Common Mode Rejection Ratio	$T_A = 25°C$, $R_S < 10\ k\Omega$	90	70	dB Min
Supply Voltage Rejection Ratio	$T_A = 25°C$, $R_S < 10\ k\Omega$	96	80	dB Min

Note 1: Derate linearly 2 mW/°C case temperature above 25°C.

Note 2: This rating applies to maximum voltage differential between input terminals. The maximum input voltage on either input terminal is limited to +V_S up to ±15V.

Note 3: This rating limited to supply voltage to a maximum of ±15V.

Note 4: These specifications apply for $V_S = \pm 8V$, $I_O = 20\ \mu A$, and $-55°C < T_A < +125°C$ unless otherwise specified. With the LH2430C, however, all temperature specifications are limited to $0°C < T_A < 70°C$.

Section 2

Buffers

2

Section 2. Buffer Amplifiers

Features	Voltage Gain (min)	Output Current	Slew Rate	Input Impedance	Part Number −55°C to 125°C	Part Number −25°C to 85°C	Page Number
Bipolar Input, medium speed	0.95	±100 mA	200 V/μs	180 KΩ	LH0002H	LH0002CH LH0002CN	2-4 2-4
FET Input, high speed	0.97	±100 mA	1000 V/μs	10^{10} Ω	LH0033G	LH0033CG LH0033CJ	2-7 2-7
FET Input, very high speed	0.95	±250 mA	2000 V/μs	10^{10} Ω	LH0063K	LH0063CK	2-7

National Semiconductor

LH0002/LH0002C Current Amplifier

general description

The LH0002/LH0002C is a general purpose thick film hybrid current amplifier that is built on a single substrate. The circuit features:

- High Input Impedance 400 kΩ
- Low Output Impedance 6Ω
- High Power Efficiency
- Low Harmonic Distortion
- DC to 30 MHz Bandwidth
- Output Voltage Swing that Approaches Supply Voltage
- 400 mA Pulsed Output Current
- Slew rate is typically 200V/μs
- Operation from ±5V to ±20V

These features make it ideal to integrate with an operational amplifier inside a closed loop configuration to increase current output. The symmetrical output portion of the circuit also provides a low output impedance for both the positive and negative slopes of output pulses.

The LH0002 is available in an 8-lead low-profile TO-5 header; the LH0002C is also available in an 8-lead TO-5, and a 10-pin molded dual-in-line package.

The LH0002 is specified for operation over the −55°C to +125°C military temperature range. The LH0002C is specified for operation over the 0°C to +85°C temperature range.

applications

- Line driver
- 30 MHz buffer
- High speed D/A conversion
- Instrumentation buffer
- Precision current source

schematic and connection diagrams

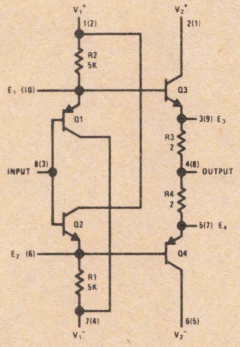

Pin numbers in parentheses denote pin connections for dual-in-line package.

Dual-In-Line Package

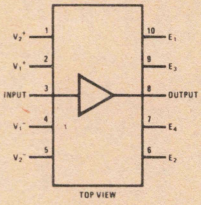

Order Number LH0002CN
See Package N10B

Metal Can Package

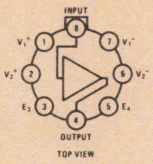

Order Number LH0002H or LH0002CH
See Package H08A

typical applications

High Current Operational Amplifier

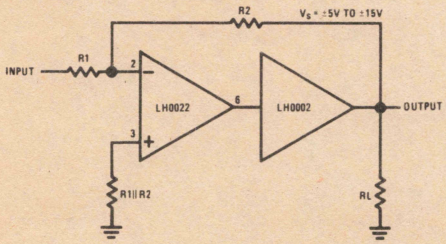

Line Driver

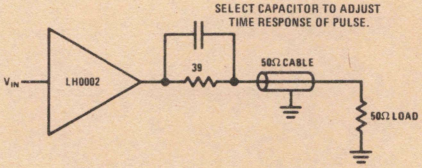

*Previously called NH0002/NH0002C

absolute maximum ratings

Supply Voltage		±22V
Power Dissipation Ambient		600 mW
Input Voltage (Equal to Power Supply Voltage)		
Storage Temperature Range		−65°C to +150°C
Operating Temperature Range	LH0002	−55°C to +125°C
	LH0002C	0°C to +85°C
Steady State Output Current		±100 mA
Pulsed Output Current (50 ms On/1 sec Off)		±400 mA

electrical characteristics (Note 1)

PARAMETERS	CONDITIONS	MIN	TYP	MAX	UNITS
Voltage Gain	R_S = 10 kΩ, R_L = 1.0 kΩ V_{IN} = 3.0 V_{PP}, f = 1.0 kHz T_A = −55°C to 125°C	.95	.97		
AC Current Gain	V_{IN} = 1.0 V_{rms} f = 1.0 kHz		40		A/mA
Input Impedance	R_S = 200 kΩ, V_{IN} = 1.0 V_{rms}, f = 1.0 kHz, R_L = 1.0 kΩ	180	400	–	kΩ
Output Impedance	V_{IN} = 1.0 V_{rms}, f = 1.0 kHz R_L = 50Ω, R_S = 10 kΩ	–	6	10	Ω
Output Voltage Swing	R_L = 1.0 kΩ, f = 1.0 kHz	±10	±11	–	V
Output Voltage Swing	V_S = ±15V, V_{IN} = ±10V, $R_S \leqslant$ 50Ω R_L = 100Ω , T_A = 25°C	±9.5V			
DC Output Offset Voltage	R_S = 300Ω, R_L = 1.0 kΩ T_A = −55°C to 125°C	–	±10	±30	mV
DC Input Offset Current	R_S = 10 kΩ, R_L = 1.0 kΩ T_A = −55°C to 125°C	–	±6.0	±10	μA
Harmonic Distortion	V_{IN} = 5.0 V_{rms}, f = 1.0 kHz R_L = 1k	–	0.1	–	%
Rise Time	R_L = 50Ω, ΔV_{IN} = 100mV		7	12	ns
Positive Supply Current	R_S = 10 kΩ, R_L = 1 kΩ	–	+6.0	+10.0	mA
Negative Supply Current	R_S = 10 kΩ, R_L = 1 kΩ	–	−6.0	−10.0	mA

Note 1: Specification applies for T_A = 25°C with +12V on Pins 1 and 2; −12V on Pins 6 and 7 for the metal can package and +12V on Pins 1 and 2; −12V on Pins 4 and 5 for the dual-in-line package unless otherwise specified. The parameter guarantees for LH0002C apply over the temperature range of 0°C to +85°C, while parameters for the LH0002 are guaranteed over the temperature range −55°C to 125°C.

typical performance

Maximum Power Dissipation

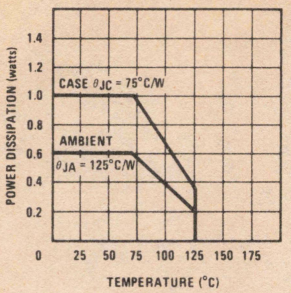

Frequency Response

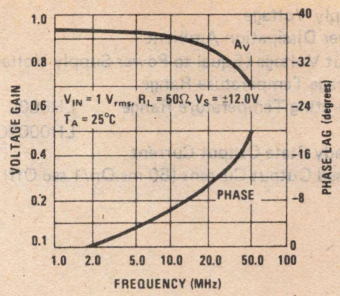

Input Impedance (Magnitude & Phase)

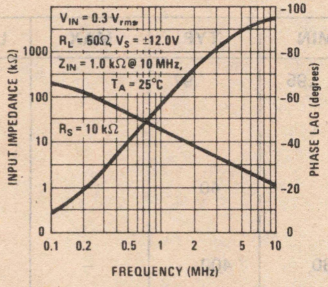

Supply Current

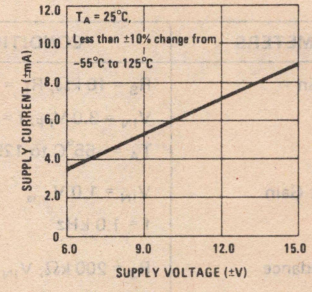

Positive Pulse

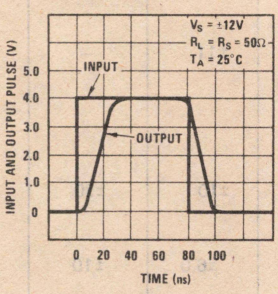

Negative Pulse

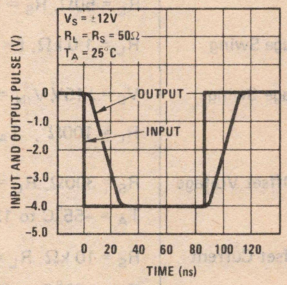

Input Offset Current

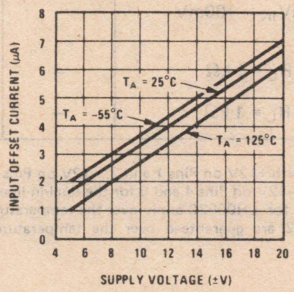

National Semiconductor

Buffers

LH0033/LH0033C, LH0063/LH0063C Fast and Damn Fast Buffer Amplifiers

general description

The LH0033/LH0033C and LH0063/LH0063C are high speed, FET input, voltage follower/buffers designed to provide high current drive at frequencies from DC to over 100 MHz. The LH0033/LH0033C will provide ±10 mA into 1 kΩ loads (±100 mA peak) at slew rates of 1500V/μs. The LH0063/LH0063C will provide ±250 mA into 50Ω loads (±500 mA peak) at slew rates of up to 6000V/μs. In addition, both exhibit excellent phase linearity up to 20 MHz.

Both are intended to fulfill a wide range of buffer applications such as high speed line drivers, video impedance transformation, nuclear instrumentation amplifiers, op amp isolation buffer for driving reactive loads and high impedance input buffers for high speed A to D's and comparators. In addition, the LH0063/LH0063C can continuously drive 50Ω coaxial cables or be used as a diddle yoke driver for high resolution CRT displays. For additional applications information, see AN-48.

advantages

- Only +10V supply needed for 5 V_{P-P} video out
- Speed does not degrade system performance
- Wide data rate range for phase encoded systems
- Output drive adequate for most loads
- Single pre-calibrated package

features

Damn fast (LH0063)	6000V/μs
Wide range single or dual supply operation	
Wide power bandwidth	DC to 100 MHz
High output drive	±10V with 50Ω load
Low phase non-linearity	2 degrees
Fast rise times	2 ns
High current gain	120 dB
High input resistance	10^{10} Ω

These devices are constructed using specially selected junction FET's and active laser trimming to achieve guaranteed performance specifications. The LH0033 and LH0063 are specified for operation from −55°C to +125°C; whereas, the LH0033C and LH0063C are specified from −25°C to +85°C. The LH0033/LH0033C is available in a 1.5W metal TO-8 package and a special 1/2 x 1 inch 8 pin ceramic dual-in-line package while the LH0063/LH0063C is available in a 5W 8-pin TO-3 package.

connection diagrams

Metal Can Package

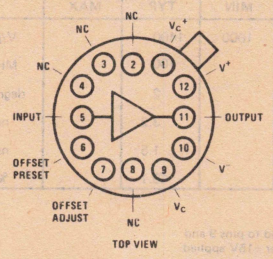

Order Number LH0033G or LH0033CG
See Package H12B

Dual-In-Line Package

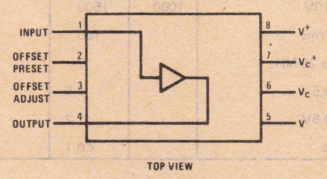

Order Number LH0033J or LH0033CJ
See Package HY08A

Metal Can Package

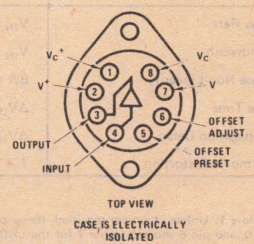

Order Number LH0063K or LH0063CK
See Package K08A

absolute maximum ratings

Supply Voltage ($V^+ - V^-$)	40V
Maximum Power Dissipation (See Curves)	
LH0063/LH0063C	5W
LH0033/LH0033C	1.5W
Maximum Junction Temperature	175°C
Input Voltage	Equal to Supplies
Continuous Output Current	
LH0063/LH0063C	±250 mA
LH0033/LH0033C	±100 mA
Peak Output Current	
LH0063/LH0063C	±500 mA
LH0033/LH0033C	±250 mA
Operating Temperature Range	
LH0033 and LH0063	−55°C to +125°C
LH0033C and LH0063C	−25°C to +85°C
Storage Temperature Range	−65°C to +150°C
Lead Temperature (Soldering, 10 sec)	300°C

dc electrical characteristics LH0033/LH0033C: (Note 1)

PARAMETER	CONDITIONS	LIMITS						UNITS
		LH0033			LH0033C			
		MIN	TYP	MAX	MIN	TYP	MAX	
Output Offset Voltage	R_S = 100 kΩ, T_C = 25°C		5	10		12	20	mV
	R_S = 100 kΩ			15			25	mV
Average Temperature Coefficient of Offset Voltage	R_S = 100 kΩ, −55°C ≤ T_C ≤ 125°C		50			50		μV/°C
Input Bias Current	T_C = 25°C		.05	.1		.05	.15	nA
				10			5	nA
Voltage Gain	V_{IN} = 1Vrms, f = 1 kHz, R_L = 1 kΩ, R_S = 100 kΩ	.97	.98	1	.96	.98	1	V/V
Input Impedance	R_L = 1 kΩ	10^{10}	10^{11}		10^{10}	10^{11}		Ω
Output Impedance	V_{IN} = 1Vrms, f = 1 kHz, R_S = 100 kΩ, R_L = 1 kΩ		6	10		6	10	Ω
Output Voltage Swing	R_L = 1 kΩ,	±12	±13		±12	±13		V
	R_L = 100Ω, T_C = 25°C	±9			±9			V
	V_S = ±5V, R_L = 1 kΩ		6			6		V_{P-P}
Supply Current	V_{IN} = 0V, V_S = ±15V		20	22		21	24	mA
	V_S = ±5V		18			18		mA
Power Consumption	V_{IN} = 0V, V_S = ±15V		600	660		630	720	mW
	V_S = ±5V		180			180		mW

ac electrical characteristics

LH0033/LH0033C (T_C = 25°C, V_S = ±15V, R_S = 50Ω, R_L = 1 kΩ)

PARAMETER	CONDITIONS	LIMITS						UNITS
		LH0033			LH0033C			
		MIN	TYP	MAX	MIN	TYP	MAX	
Slew Rate	V_{IN} = ±10V	1000	1500		1000	1400		V/μs
Bandwidth	V_{IN} = 1Vrms		100			100		MHz
Phase Non-Linearity	BW = 1 to 20 MHz		2			2		degrees
Rise Time	ΔV_{IN} = 0.5V		2.9			3.2		ns
Propagation Delay	ΔV_{IN} = 0.5V		1.2			1.5		ns
Harmonic Distortion	f > 1 kHz		<0.1			<0.1		%

Note 1: Unless otherwise specified, these specifications apply for +15V applied to pins 1 and 12, −15V applied to pins 9 and 10, and pin 6 shorted to pin 7 for the LH0033/LH0033C. For the LH0063/LH0063C, specifications apply for +15V applied to pins 1 and 2, −15V applied to pins 7 and 8, and pin 5 shorted to pin 6. Unless otherwise noted, specifications apply over a temperature range of −55°C ≤ T_C ≤ +125°C for the LH0033 and LH0063; and −25°C ≤ T_C ≤ +85°C for the LH0033C and LH0063C. Typical values shown are for T_C = 25°C.

dc electrical characteristics LH0063/LH0063C (Note 1)

PARAMETER	CONDITIONS	LIMITS						UNITS
		LH0063			LH0063C			
		MIN	TYP	MAX	MIN	TYP	MAX	
Output Offset Voltage	$R_S \leq 100\ k\Omega$, $T_C = 25°C$		10	25		10	50	mV
	$R_S \leq 100\ k\Omega$			100			100	mV
Average Temperature Coefficient of Output Offset Voltage	$R_S \leq 100\ k\Omega$		300			300		μV/°C
Input Bias Current	$T_J = 25°C$		.1	−5		.1	−5	nA
				10			5	nA
Voltage Gain	$V_{IN} = \pm 10V$, $R_S \leq 100\ k\Omega$, $R_L = 1\ k\Omega$	.94	.96	1	.94	.96	1	V/V
Voltage Gain	$V_{IN} = \pm 10V$, $R_S \leq 100\ k\Omega$, $R_L = 50\Omega$, $T_C = 25°C$	.92	.93	.98	.91	.93	.98	V/V
Input Resistance		10^{10}	10^{11}		10^{10}	10^{11}		Ω
Input Capacitance	Case Shorted to Output		8			8		pF
Output Impedance	$V_{OUT} = \pm 10V$, $R_S = 100\ k\Omega$ $R_L = 50\Omega$		1	4		1	4	Ω
Output Current Swing	$V_{IN} = \pm 10V$, $R_S \leq 100\ k\Omega$	.2	.25		.2	.25		Amps
Output Voltage Swing	$R_L = 50\Omega$	±10	±13		±10	±13		V
Output Voltage Swing	$V_S = \pm 5V$, $R_L = 50\Omega$, $T_C = 25°C$	5	7		5	7		V_{P-P}
Supply Current	$T_C = 25°C$, $R_L = \infty$, $V_S = \pm 15V$		35	65		35	65	mA
Supply Current	$V_S = \pm 5V$		50			50		mA
Power Consumption	$T_C = 25°C$, $R_L = \infty$, $V_S = \pm 15V$		1.05	1.95		1.05	1.95	W
Power Consumption	$V_S = \pm 5V$		500			500		mW

ac electrical characteristics

LH0063/LH0063C: ($T_C = 25°C$, $V_S = \pm 15V$, $R_S = 50\Omega$, $R_L = 50\Omega$)

PARAMETER	CONDITIONS	LIMITS						UNITS
		LH0063			LH0063C			
		MIN	TYP	MAX	MIN	TYP	MAX	
Slew Rate	$R_L = 1\ k\Omega$, $V_{IN} = \pm 10V$		6000			6000		V/μs
Slew Rate	$R_L = 50\Omega$, $V_{IN} = \pm 10V$ $T_C = 25°C$	2000	2400		2000	2400		V/μs
Bandwidth	$V_{IN} = 1$ Vrms		200			200		MHz
Phase Non-Linearity	BW = 1 to 20 MHz		2			2		degrees
Rise Time	$\Delta V_{IN} = .5V$		1.6			1.9		ns
Propagation Delay	$\Delta V_{IN} = .5V$		1.9			2.1		ns
Harmonic Distortion			<0.1			<0.1		%

Note 1: Unless otherwise specified, these specifications apply for +15V applied to pins 1 and 12, −15V applied to pins 9 and 10, and pin 6 shorted to pin 7 for the LH0033/LH0033C. For the LH0063/LH0063C, specifications apply for +15V applied to pins 1 and 2, −15V applied to pins 7 and 8, and pin 5 shorted to pin 6. Unless otherwise noted, specifications apply over a temperature range of $-55°C \leq T_C \leq +125°C$ for the LH0033 and LH0063; and $-25°C \leq T_C \leq +85°C$ for the LH0033C and LH0063C. Typical values shown are for $T_C = 25°C$.

typical performance characteristics

LH0033 Power Dissipation

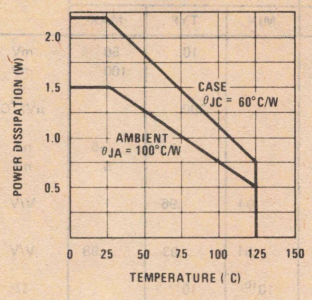

LH0063 Power Dissipation

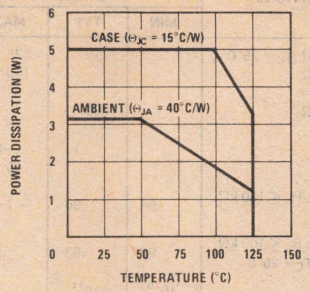

LH0063 DC Safe Operating Area

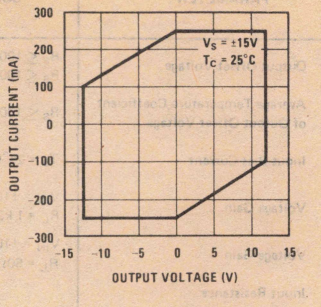

LH0033 Supply Current vs Supply Voltage

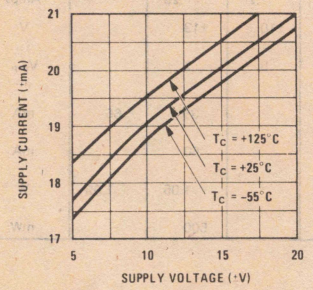

LH0063 Supply Current vs Supply Voltage

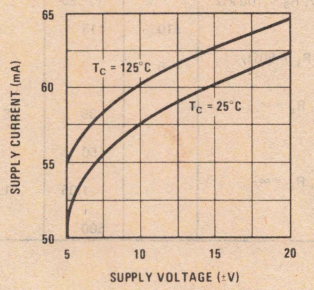

LH0033 Output Voltage vs Supply Voltage

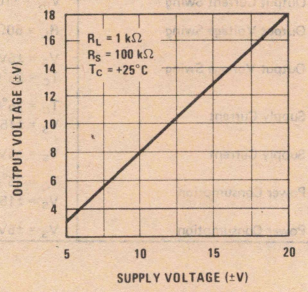

LH0063 Output Voltage vs Supply Voltage

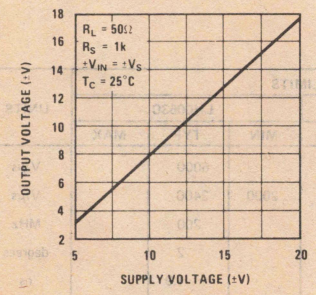

LH0033 Negative Pulse Response

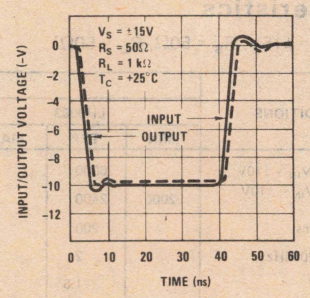

LH0033 Positive Pulse Response

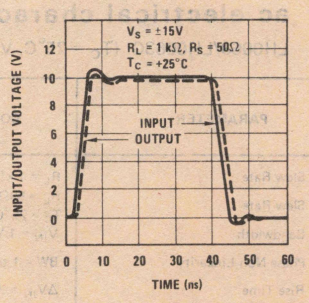

LH0033 Frequency Response

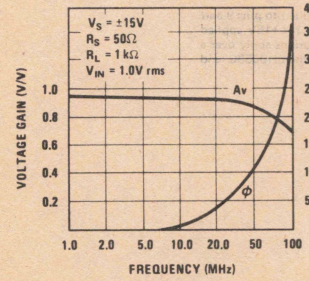

LH0033 Rise and Fall Time vs Temperature

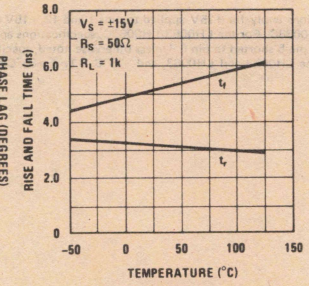

LH0063 Large Signal Pulse Response

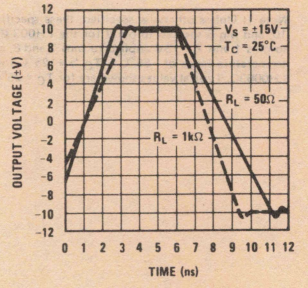

typical performance characteristics (con't)

LH0033 Input Bias Current vs Temperature

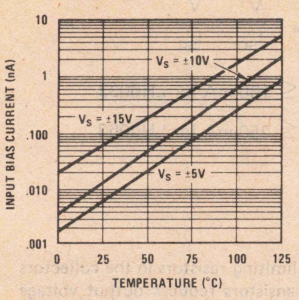

LH0063 Input Current

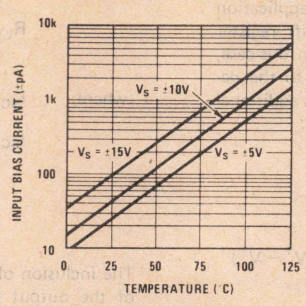

LH0063 Frequency Response

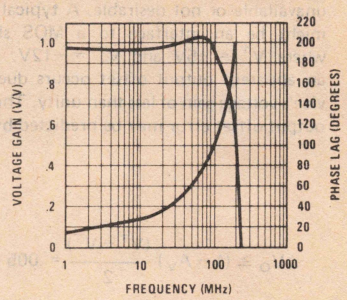

LH0063 Small Signal Rise Time

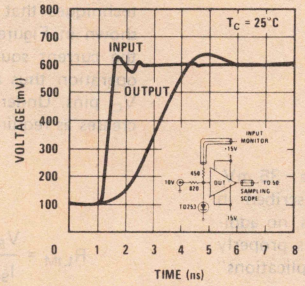

application hints

Recommended Layout Precautions: RF/video printed circuit board layout rules should be followed when using the LH0033 and LH0063 since they will provide power gain to frequencies over 100 MHz. Ground planes are recommended and power supplies should be decoupled at each device with low inductance capacitors. In addition, ground plane shielding may be extended to the metal case of the device since it is electrically isolated from internal circuitry. Alternatively the case should be connected to the output to minimize input capacitance.

Offset Voltage Adjustment: Both the LH0033's and LH0063's offset voltages have been actively trimmed by laser to meet guaranteed specifications when the offset preset pin is shorted to the offset adjust pin. This pre-calibration allows the devices to be used in most DC or AC applications without individually offset nulling each device. If offset null is desirable, it is simply obtained by leaving the offset preset pin open and connecting a trim pot of 100Ω for the LH0033 or 1 kΩ for the LH0063 between the offset adjust pin and V^- as illustrated in Figures 1 and 2.

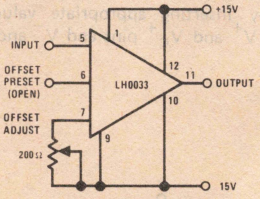

FIGURE 1. Offset Zero Adjust for LH0033 (Pin nos. shown for TO-8)

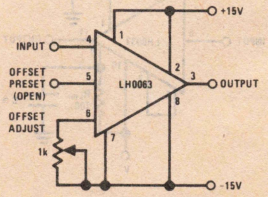

FIGURE 2. Offset Zero Adjust for LH0063

application hints (con't)

Operation from Single or Asymmetrical Power Supplies: Both device types may be readily used in applications where symmetrical supplies are unavailable or not desirable. A typical application might be an interface to a MOS shift register where $V^+ = +5V$ and $V^- = -12V$. In this case, an apparent output offset occurs due to the device's voltage gain of less than unity. This additional output offset error may be predicted by:

$$\Delta V_O \cong (1 - A_V)\frac{(V^+ - V^-)}{2} = .005\,(V^+ - V^-)$$

where:

A_V = No load voltage gain, typically .99

V^+ = Positive supply voltage

V^- = Negative supply voltage

For the above example, ΔV_O would be −35 mV. This may be adjusted to zero as described in Section 2. For AC coupled applications, no additional offset occurs if the DC input is properly biased as illustrated in the "typical applications" section.

Short Circuit Protection: In order to optimize transient response and output swing, output current limit has been omitted from the LH0033 and LH0063. Short circuit protection may be added by inserting appropriate value resistors between V^+ and V_C^+ pins and V^- and V_C^- pins as illustrated in Figures 3 and 4. Resistor values may be predicted by:

$$R_{LIM} \cong \frac{V^+}{I_{SC}} = \frac{V^-}{I_{SC}}$$

where: $I_{SC} \leq 100$ mA for LH0033

$I_{SC} \leq 250$ mA for LH0063

The inclusion of limiting resistors in the collectors of the output transistors reduces output voltage swing. Decoupling V_C^+ and V_C^- pins with capacitors to ground will retain full output swing for transient pulses. Alternate active current limit techniques that retain full DC output swing are shown in Figures 5, 6 and 7. In Figures 5 and 6, the current sources are saturated during normal operation thus apply full supply voltage to the V_C pins. Under fault conditions, the voltage decreases as required by the overload. For Figure 5:

$$R_{LIM} = \frac{V_{BE}}{I_{SC}} = \frac{.6V}{60\text{ mA}} = 10\Omega$$

In Figure 6, quad transistor arrays are used to minimize can count and:

$$R_{LIM} = \frac{V_{BE}}{1/3\,(I_{SC})} = \frac{.6V}{1/3\,(200\text{ mA})} = 8.2\Omega$$

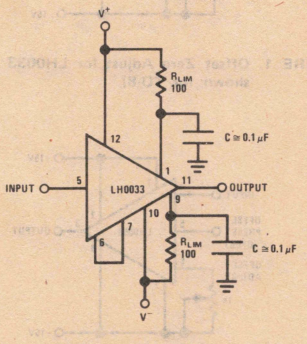

FIGURE 3. LH0033 Using Resistor Current Limiting

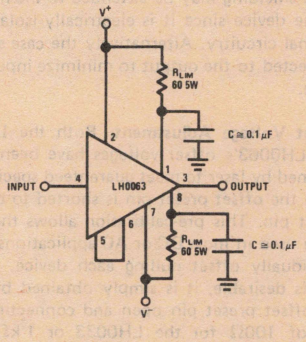

FIGURE 4. LH0063 Using Resistor Current Limiting

application hints (con't)

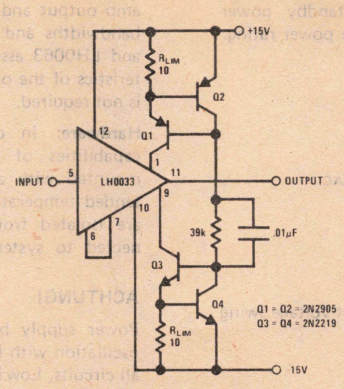

FIGURE 5. LH0033 Current Limiting Using Current Sources

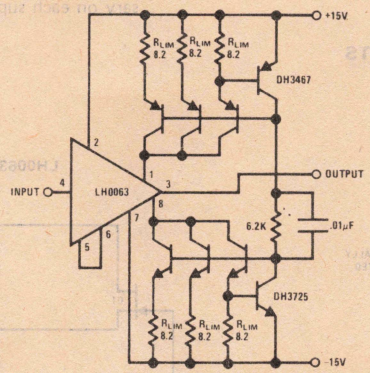

FIGURE 6. LH0063 Current Limiting Using Current Sources

Capacitive Loading: Both the LH0033 and LH0063 are designed to drive capacitive loads such as co-axial cables in excess of several thousand picofarads without susceptibility to oscillation. However, peak current resulting from $(C \times d_V/d_t)$ should be limited below absolute maximum peak current ratings for the devices.

Thus for the LH0033:

$$\left(\frac{\Delta V_{IN}}{\Delta t}\right) \times C_L \leq I_{OUT} \leq \pm 250\ \text{mA}$$

and for the LH0063:

$$\left(\frac{\Delta V_{IN}}{\Delta t}\right) \times C_L \leq I_{OUT} \leq \pm 500\ \text{mA}$$

application hints (con't)

In addition, power dissipation resulting from driving capacitative loads plus standby power should be kept below total package power rating:

$$P_{\substack{diss\\pkg}} \geq P_{DC} + P_{AC}$$

$$P_{\substack{diss\\pkg}} \geq (V^{+} - V^{-}) \times I_S + P_{AC}$$

$$P_{AC} \cong (V_{P\text{-}P})^2 \times f \times C_L$$

where $V_{P\text{-}P}$ = Peak-to-peak output voltage swing

f = frequency

C_L = Load Capacitance

Operation Within an Op Amp Loop: Both devices may be used as a current booster or isolation buffer within a closed loop with op amps such as LH0032, LH0062, or LM118. An isolation resistor of 47Ω should be used between the op amp output and the input of LH0033. The wide bandwidths and high slew rates of the LH0033 and LH0063 assure that the loop has the characteristics of the op amp and that additional rolloff is not required.

Hardware: In order to utilize the full drive capabilities of both devices, each should be mounted with a heat sink particularly for extended temperature operation. The cases of both are isolated from the circuit and may be connected to system chassis.

ACHTUNG!

Power supply bypassing is necessary to prevent oscillation with both the LH0033 and LH0063 in all circuits. Low inductance ceramic disc capacitors with the shortest practical lead lengths must be connected from each supply lead (within < ¼ to ½" of the device package) to a ground plane. Capacitors should be one or two 0.1μF in parallel for the LH0033; adding a 4.7μF solid tantalum capacitor will help in troublesome instances. For the LH0063, two 0.1μF ceramic and one 4.7μF solid tantalum capacitors in parallel will be necessary on each supply lead.

schematic diagrams

LH0033/LH0033C

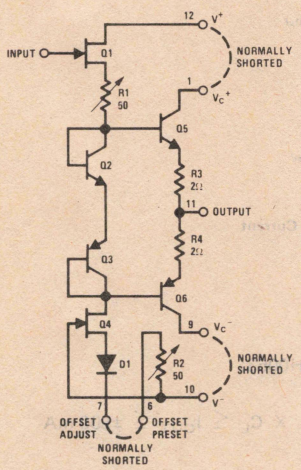

PIN NUMBERS SHOWN FOR TO-8 ("G") PACKAGE.

LH0063/LH0063C

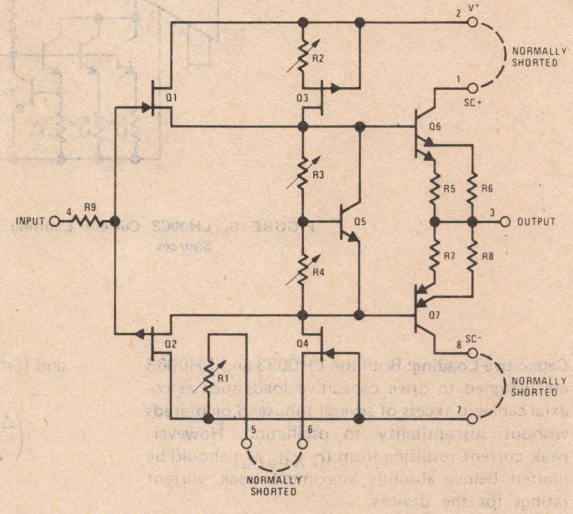

typical applications

High Speed Automatic Test Equipment Forcing Function Generator

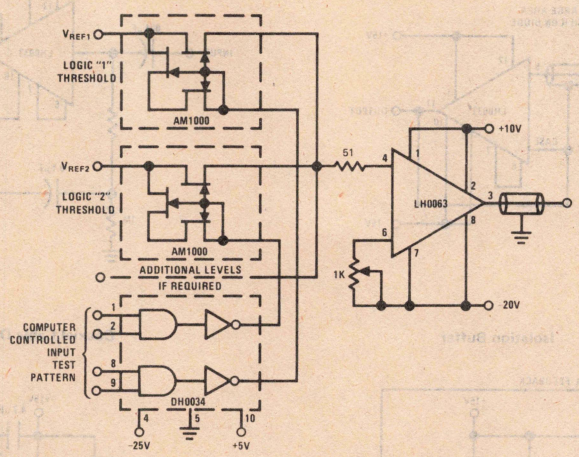

Gamma Ray Pulse Integrator

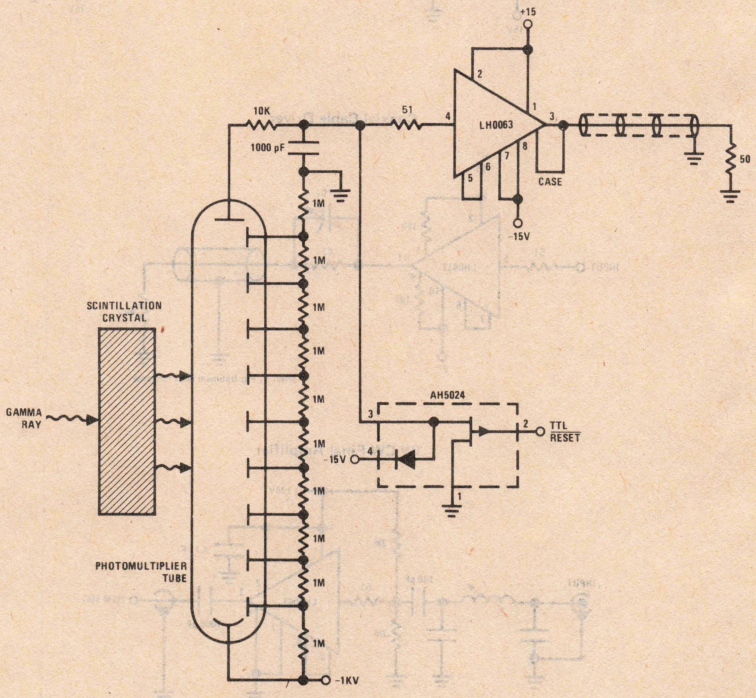

typical applications (con't)

Nuclear Particle Detector

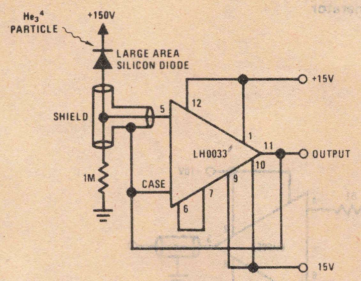

High Input Impedance AC Coupled Amplifier

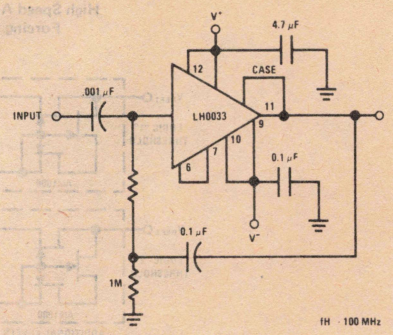

Isolation Buffer

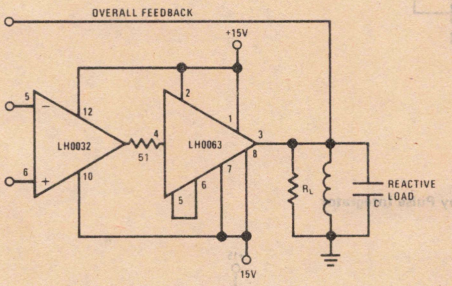

Coaxial Cable Driver

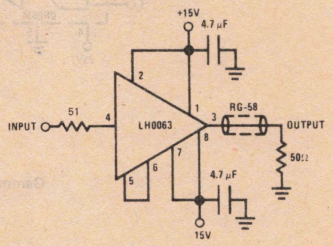

Coaxial Cable Driver

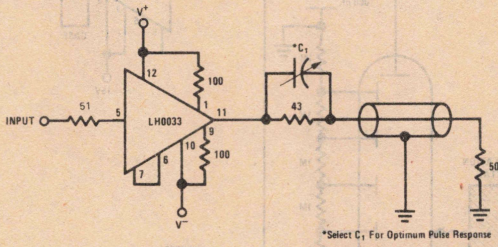

1W CW Final Amplifier

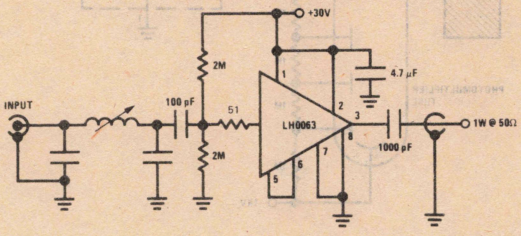

typical applications (con't)

High Input Impedance Comparator With Offset Adjust

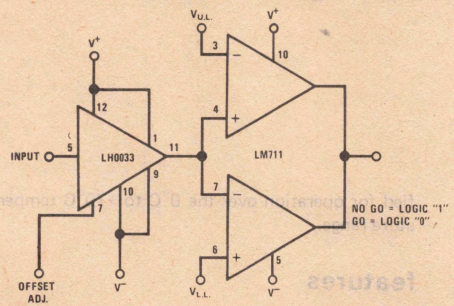

Instrumentation Shield/Line Driver

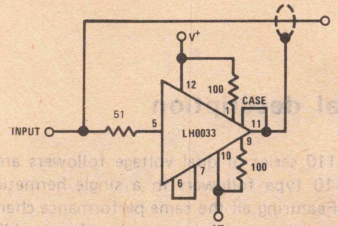

Single Supply AC Amplifier

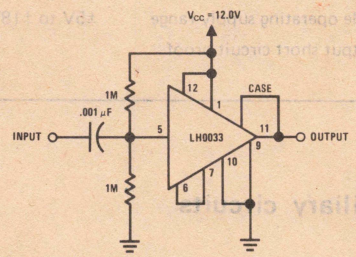

4.5 MHz Notch Filter

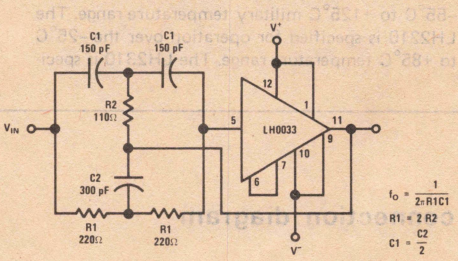

High Speed Sample & Hold

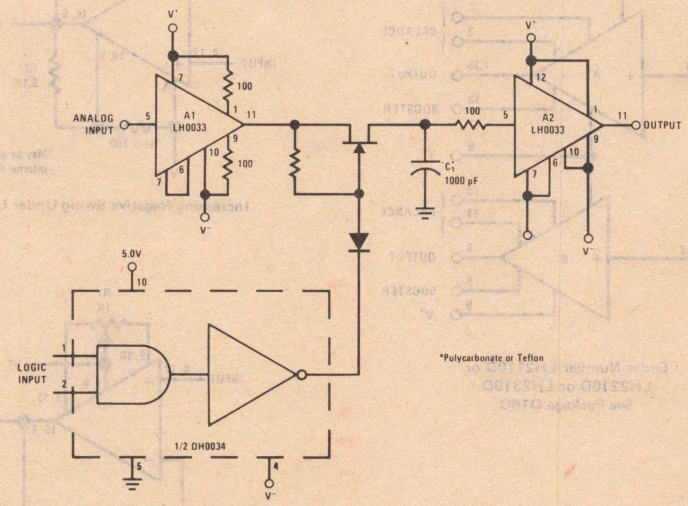

National Semiconductor

LH2110/LH2210/LH2310 Dual Voltage Follower

general description

The LH2110 series of dual voltage followers are two LM110 type followers in a single hermetic package. Featuring all the same performance characteristics of the single, these duals offer in addition closer thermal tracking, lower weight, reduced insertion cost and smaller size than two singles. For additional information, see the LM110 data sheet and National's Linear Application Notebook.

The LH2110 is specified for operation over the −55°C to +125°C military temperature range. The LH2210 is specified for operation over the −25°C to +85°C temperature range. The LH2310 is specified for operation over the 0°C to +70°C temperature range.

features

- Low input current — 1 nA
- High input resistance — 10^{10} ohms
- High slew rate — 30V/μs
- Wide bandwidth — 20 MHz
- Wide operating supply range — ±5V to ±18V
- Output short circuit proof

connection diagram

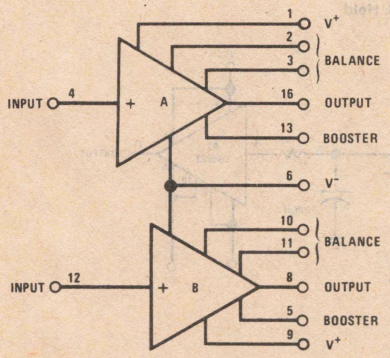

Order Number LH2110D or LH2210D or LH2310D
See Package D16C

auxiliary circuits

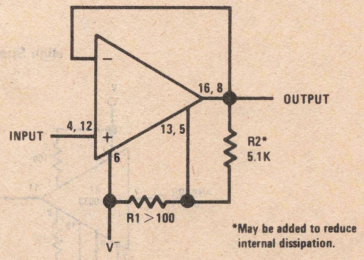

Increasing Negative Swing Under Load

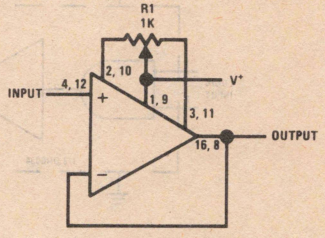

Offset Balancing Circuit

absolute maximum ratings

Supply Voltage	±18V	Operating Temperature Range	LH2110	−55°C to 125°C
Power Dissipation (Note 1)	500 mW		LH2210	−25°C to 85°C
Input Voltage (Note 2)	±15V		LH2310	0°C to 70°C
Output Short Circuit Duration (Note 3)	Continuous	Storage Temperature Range		−65°C to 150°C
		Lead Temperature (Soldering, 10 sec)		300°C

electrical characteristics Each side (Note 4)

PARAMETER	CONDITIONS	LIMITS			UNITS
		LH2110	LH2210	LH2310	
Input Offset Voltage	$T_A = 25°C$	4.0	4.0	7.5	mV Max
Input Bias Current	$T_A = 25°C$	3.0	3.0	7.0	nA Max
Input Resistance	$T_A = 25°C$	10^{10}	10^{10}	10^{10}	Ω Min
Input Capacitance		1.5	1.5	1.5	pF Typ
Large Signal Voltage Gain	$T_A = 25°C$, $V_S = \pm15V$ $V_{OUT} = \pm10V$, $R_L = 8\ k\Omega$	.999	.999	.999	V/V Min
Output Resistance	$T_A = 25°C$	2.5	2.5	2.5	Ω Max
Supply Current (Each Amplifier)	$T_A = 25°C$	5.5	5.5	5.5	mA Max
Input Offset Voltage		6.0	6.0	10	mV Max
Offset Voltage	$-55°C \leq T_A \leq 85°C$	6	6	10	μV/°C Typ
Temperature Drift	$T_A = 125°C$	12	12	–	μV/°C Typ
Input Bias Current		10	10	10	nA Max
Large Signal Voltage Gain	$V_S = \pm15V$, $V_{OUT} = \pm10V$ $R_L = 10\ k\Omega$	.999	.999	.999	V/V Min
Output Voltage Swing (Note 5)	$V_S = \pm15V$, $R_L = 10\ k\Omega$	±10	±10	±10	V Min
Supply Current (Each Amplifier)	$T_A = 125°C$	4.0	4.0	–	mA Max
Supply Voltage Rejection Ratio	$\pm5V \leq V_S \leq \pm18V$	70	70	70	dB Min

Note 1: The maximum junction temperature of the LH2110 is 150°C, while that of the LH2210 is 100°C and that of the LH2310 is 85°C. For operating devices in the flat package at elevated temperatures, the derating is based on a thermal resistance of 185°C/W when mounted on a 1/16-inch-thick epoxy glass board with 0.03-inch-wide, 2-ounce copper conductors. The thermal resistance of the dual-in-line package is 100°C/W, junction to ambient.

Note 2: For supply voltages less than ±15V, the absolute maximum input voltage is equal to the supply voltage.

Note 3: Continuous short circuit is allowed for case temperatures to 125°C and ambient temperatures to 70°C. It is necessary to insert a resistor greater than 2 kΩ in series with the input when the amplifier is driven from low impedance sources to prevent damage when the output is shorted.

Note 4: These specifications apply for $\pm5V \leq V_S \leq \pm18V$ and $-55°C \leq T_A \leq 125°C$, unless otherwise specified. With the LM210, however, all temperature specifications are limited to $-25°C \leq T_A \leq 85°C$, and for the LH2310, all temperature specifications are limited to $0°C \leq T_A \leq 70°C$.

Note 5: Increased output swing under load can be obtained by connecting an external resistor between the booster and V^- terminals.

absolute maximum ratings

Supply Voltage	±18V	Operating Temperature Range LH2110	-55°C to 125°C
Power Dissipation (Note 1)	500 mW	LH2210	-25°C to 85°C
Input Voltage (Note 2)	±15V	LH2310	0°C to 70°C
Output Short Circuit Duration (Note 3)	Continuous	Storage Temperature Range	-65°C to 150°C
		Lead Temperature (Soldering, 10 sec.)	300°C

electrical characteristics Each Device (Note 4)

PARAMETER	CONDITIONS	LIMITS LH2110	LH2210	LH2310	Units
Input Offset Voltage	$T_A = 25°C$	4.0	4.0	7.5	mV Max
Input Bias Current	$T_A = 25°C$	30	30	70	nA Max
Input Resistance	$T_A = 25°C$	10[7]	10[6]	10[6]	MΩ Min
Input Capacitance		1.5	1.5	1.5	pF Typ
Large Signal Voltage Gain	$T_A = 25°C$, $V_S = \pm 15V$, $V_{OUT} = \pm 10V$, $R_L = 2k\Omega$	50[5]	50	25[5]	V/V Min
Output Resistance	$T_A = 25°C$	75	75	75	Ω Max
Supply Current (Two Amplifiers)	$T_A = 25°C$	3.6	3.5	3.5	mA Max
Input Offset Voltage		6.0	6.0	10	mV Max
Offset Voltage Drift	$-55°C \le T_A \le 125°C$	5	5	10	μV/°C Typ
Temperature Drift	$-25°C \le T_A \le 85°C$	12	12		μV/°C Typ
Input Bias Current		10	10	10	nA Max
Large Signal Voltage Gain	$V_S = \pm 15V$, $V_{OUT} = \pm 10V$, $R_L = 2k\Omega$	50	50	25[5]	V/V Min
Output Voltage Swing (Note 5)	$V_S = \pm 15V$, $R_L = 10k\Omega$	±10	±10	±10	V Min
Supply Current (Two Amplifiers)	$T_A = 125°C$	4.0	4.0		mA Max
Supply Voltage Rejection Ratio	$\pm 5V \le V_S \le \pm 15V$	70	70	60	dB Min

Note 1: The maximum junction temperature of the LH2110 is 150°C, while that of the LH2210 is 100°C. Junction temperature calculations must allow for the additional temperature rise due to power dissipation. The thermal resistance of the package is 100°C/W junction to ambient.

Note 2: For supply voltages less than ±15V, the absolute maximum input voltage is equal to the supply voltage.

Note 3: Continuous short circuit is allowed for case temperatures to 125°C and ambient temperatures to 70°C. It is necessary to insure a junction temperature lower than 200°C at all times. A heatsink may be required to keep the junction temperature below the maximum 200°C rating when the amplifier is driving a low impedance load.

Note 4: These specifications apply for ±5V ≤ V_S ≤ ±18V and -55°C ≤ T_A ≤ +125°C unless otherwise specified. With the LH2110 power supply temperature specifications are limited to -25°C ≤ T_A ≤ +85°C for the LH2210 and temperature coefficients are limited to 0°C ≤ T_A ≤ 70°C.

Note 5: Increased output swing under load can be obtained by connecting an external resistor between the output and V- terminal.

Section 3

Instrumentation Amplifiers

3

Section 3. Instrumentation Amplifiers

All of the amplifiers in this section are true differential input instrumentation amplifiers with very high common mode rejection and adjustable gain.

Features	I_B Max	V_{OSin} Max	Characteristics: $\frac{\Delta V_{OS}}{\Delta T}$	Characteristics: Gain Lin.	Gain Tempco	Gain Error	Part Number: −25°C to 85°C	Part Number: −55°C to 125°C	Page Number
90 μW dissipation, wide supply range, one external gain set resistor	125 nA 100 nA	2 mV 1 mV	10 μV/°C 10 μV/°C	0.03% 0.03%	*	3% max 1% max	LH0036C	LH0036	3-4
Low cost, one external gain set resistor	500 nA	2 mV 1 mV	10 μV/°C 10 μV/°C	0.03% 0.03%	* *	1% 0.3%	LH0037C	LH0037	3-12
Ultra low drift, all gain set resistors internal, very low noise, very linear, guard drive amplifier included	100 nA	150 μV 100 μV	1 μV/°C max 0.25 μV/°C max	1 ppm 1 ppm	7 ppm/°C 7 ppm/°C	0.1% 0.1%	LH0038C	LH0038	3-15
Monolithic, external gain set resistors (2),	40 pA 20 pA	30 mV 15 mV	10 μV/°C 10 μV/°C	0.1% max 0.05%	3* 3* ppm/°C	0.2% max 0.1% max	LF252	LF152	3-27

*Dependent upon external resistors.

National Semiconductor

LH0036/LH0036C Instrumentation Amplifier

general description

The LH0036/LH0036C is a true micro power instrumentation amplifier designed for precision differential signal processing. Extremely high accuracy can be obtained due to the 300 MΩ input impedance and excellent 100 dB common mode rejection ratio. It is packaged in a hermetic TO-8 package. Gain is programmable with one external resistor from 1 to 1000. Power supply operating range is between ±1V and ±18V. Input bias current and output bandwidth are both externally adjustable or can be set by internally set values. The LH0036 is specified for operation over the −55°C to +125°C temperature range and the LH0036C is specified for operation over the −25°C to +85°C temperature range.

features

- High input impedance 300 MΩ
- High CMRR 100 dB
- Single resistor gain adjust 1 to 1000
- Low power 90μW
- Wide supply range ±1V to ±18V
- Adjustable input bias current
- Adjustable output bandwidth
- Guard drive output

equivalent circuit and connection diagrams

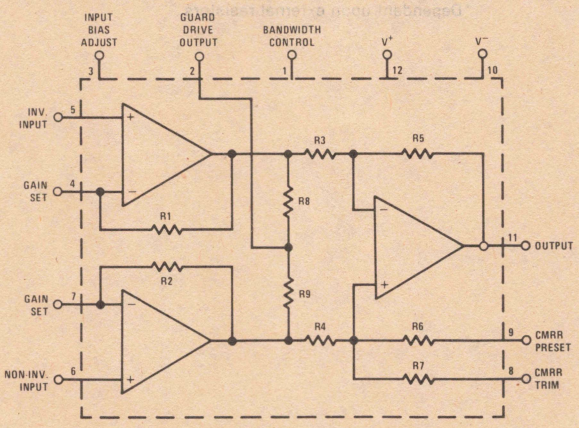

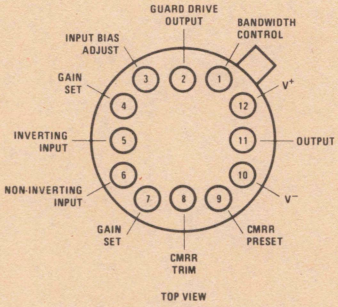

Order Number LH0036G or LH0036CG
See NS Package H12B

absolute maximum ratings

Supply Voltage	±18V	Short Circuit Duration	Continuous
Differential Input Voltage	±30V	Operating Temperature Range	
Input Voltage Range	$\pm V_S$	LH0036	−55°C to +125°C
Shield Drive Voltage	$\pm V_S$	LH0036C	−25°C to +85°C
CMRR Preset Voltage	$\pm V_S$	Storage Temperature Range	−65°C to +150°C
CMRR Trim Voltage	$\pm V_S$	Lead Temperature, Soldering 10 seconds	300°C
Power Dissipation (Note 3)	1.5W		

electrical characteristics (Notes 1 and 2)

PARAMETER	CONDITIONS	LIMITS						UNITS
		LH0036			LH0036C			
		MIN	TYP	MAX	MIN	TYP	MAX	
Input Offset Voltage (V_{IOS})	R_S = 1.0kΩ, T_A = 25°C		0.5	1.0		1.0	2.0	mV
	R_S = 1.0kΩ			2.0			3.0	mV
Output Offset Voltage (V_{OOS})	R_S = 1.0kΩ, T_A = 25°C		2.0	5.0		5.0	10	mV
	R_S = 1.0kΩ			6.0			12	mV
Input Offset Voltage Tempco ($\Delta V_{IOS}/\Delta T$)	$R_S \leq$ 1.0kΩ		10			10		μV/°C
Output Offset Voltage Tempco ($\Delta V_{OOS}/\Delta T$)			15			15		μV/°C
Overall Offset Referred to Input (V_{OS})	A_V = 1.0		2.5			6.0		mV
	A_V = 10		0.7			1.5		mV
	A_V = 100		0.52			1.05		mV
	A_V = 1000		0.502			1.005		mV
Input Bias Current (I_B)	T_A = 25°C		40	100		50	125	nA
				150			200	nA
Input Offset Current (I_{OS})	T_A = 25°C		10	40		20	50	nA
				80			100	nA
Small Signal Bandwidth	A_V = 1.0, R_L = 10kΩ		350			350		kHz
	A_V = 10, R_L = 10kΩ		35			35		kHz
	A_V = 100, R_L = 10kΩ		3.5			3.5		kHz
	A_V = 1000, R_L = 10kΩ		350			350		Hz
Full Power Bandwidth	V_{IN} = ±10V, R_L = 10k, A_V = 1		5.0			5.0		kHz
Input Voltage Range	Differential	±10	±12		±10	±12		V
	Common Mode	±10	±12		±10	±12		V
Gain Nonlinearity			0.03			0.03		%
Deviation From Gain Equation Formula	A_V = 1 to 1000		±0.3	±1.0		±1.0	±3.0	%
PSRR	±5.0V ≤ V_S ≤ ±15V, A_V = 1.0		1.0	2.5		1.0	5.0	mV/V
	±5.0V ≤ V_S ≤ ±15V, A_V = 100		0.05	0.25		0.10	0.50	mV/V
CMRR	A_V = 1.0 DC to		1.0	2.5		2.5	5.0	mV/V
	A_V = 10 100 Hz		0.1	0.25		0.25	0.50	mV/V
	A_V = 100 ΔR_S = 1.0k		50	100		50	100	μV/V
Output Voltage	V_S = ±15V, R_L = 10kΩ,	±10	±13.5		±10	±13.5		V
	V_S = ±1.5V, R_L = 100kΩ	±0.6	±0.8		±0.6	±0.8		V
Output Resistance			0.5			0.5		Ω
Supply Current			300	400		400	600	μA
Equivalent Input Noise Voltage	0.1 Hz < f < 10 kHz, R_S < 50 Ω		20			20		μV/p-p
Slew Rate	ΔV_{IN} = ±10V, R_L = 10kΩ, A_V = 1.0		0.3			0.3		V/μs
Settling Time	To ±10 mV, R_L = 10kΩ, ΔV_{OUT} = 1.0V							
	A_V = 1.0		3.8			3.8		μs
	A_V = 100		180			180		μs

Note 1: Unless otherwise specified, all specifications apply for V_S = ±15V, Pins 1, 3, and 9 grounded, −25°C to +85°C for the LH0036C and −55°C to +125°C for the LH0036.

Note 2: All typical values are for T_A = 25°C.

Note 3: The maximum junction temperature is 150°C. For operation at elevated temperature derate the G package on a thermal resistance of 90°C/W, above 25°C.

typical performance characteristics

Supply Current vs Temperature

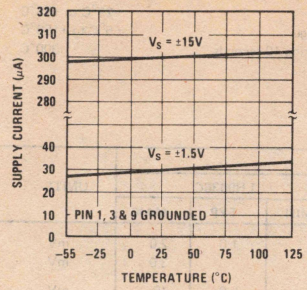

Supply Current vs Supply Voltage

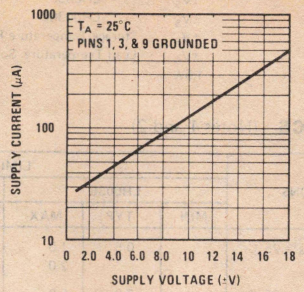

Output Voltage Swing vs Supply Voltage

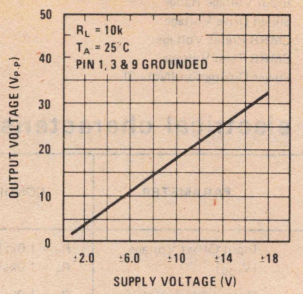

Peak to Peak Output Voltage Swing vs R_L

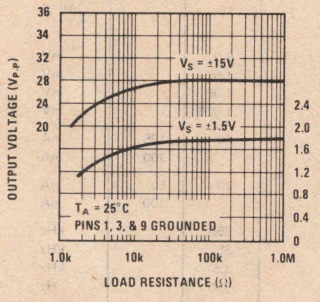

Total Input Noise Voltage* vs Frequency

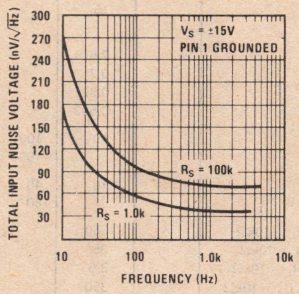

*Noise voltage includes contribution from source resistance

Closed Loop Voltage Gain vs Frequency

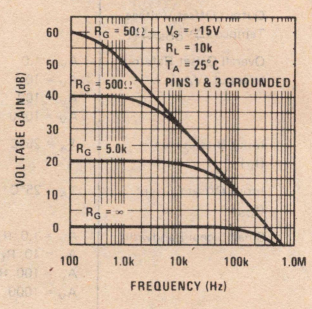

Closed Loop Voltage Gain

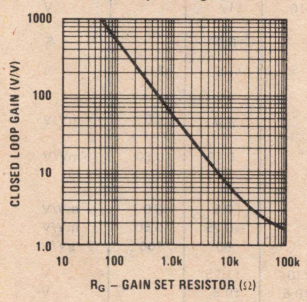

CMRR vs Frequency

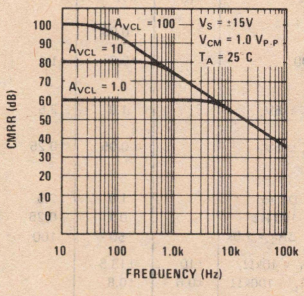

Common Mode Voltage vs Supply Voltage

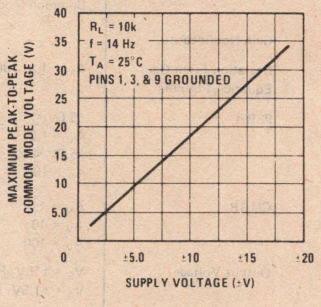

Input Bias Current

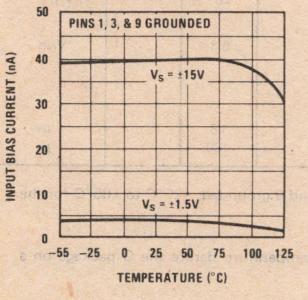

Output Voltage Swing vs Frequency

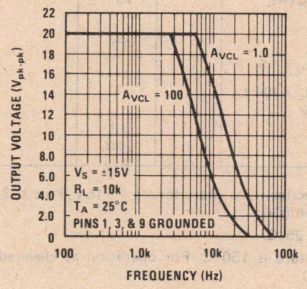

Large Signal Pulse Response

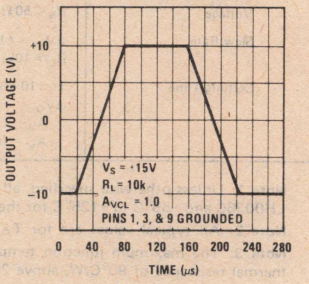

typical applications

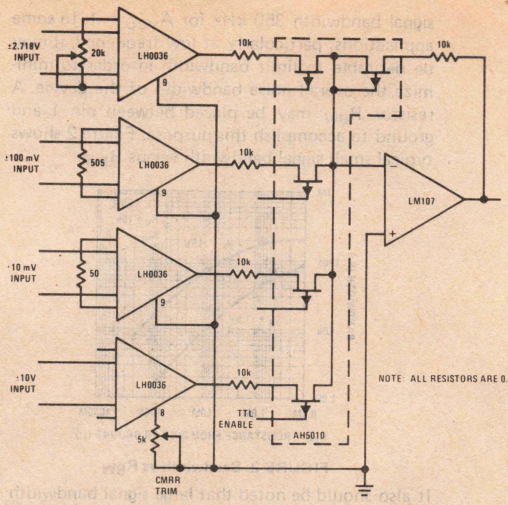

Pre MUX Signal Conditioning

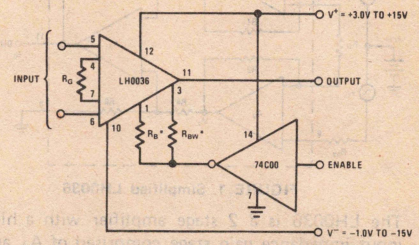

Instrumentation Amplifier with Logic Controlled Shut-Down

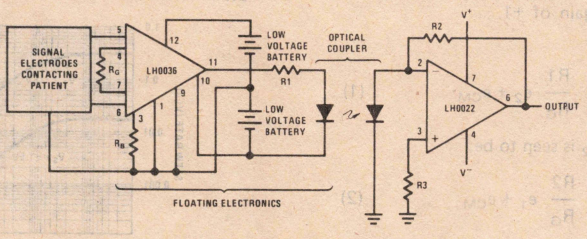

Isolation Amplifier for Medical Telemetry

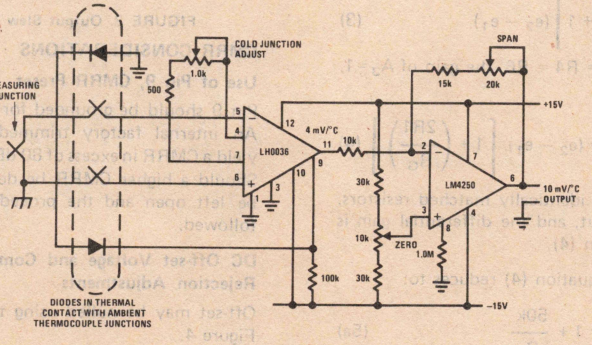

Thermocouple Amplifier with Cold Junction Compensation

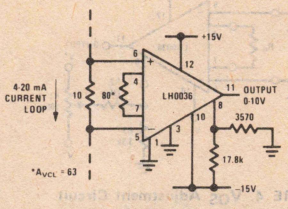

Process Control Interface

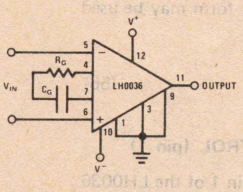

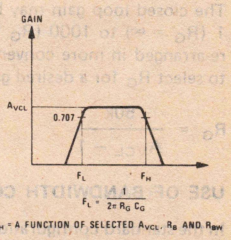

High Pass Filter

applications information

THEORY OF OPERATION

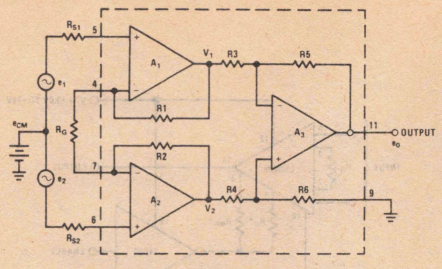

FIGURE 1. Simplified LH0036

The LH0036 is a 2 stage amplifier with a high input impedance gain stage comprised of A_1 and A_2 and a differential to single-ended unity gain stage, A_3. Operational amplifier, A_1, receives differential input signal, e_1, and amplifies it by a factor equal to $(R1 + R_G)/R_G$.

A_1 also receives input e_2 via A_2 and R2. e_2 is seen as an inverting signal with a gain of $R1/R_G$. A_1 also receives the common mode signal e_{CM} and processes it with a gain of +1.

Hence:

$$V_1 = \frac{R1 + R_G}{R_G} e_1 - \frac{R1}{R_G} e_2 + e_{CM} \qquad (1)$$

By similar analysis V_2 is seen to be:

$$V_2 = \frac{R2 + R_G}{R_G} e_2 - \frac{R2}{R_G} e_1 + e_{CM} \qquad (2)$$

For R1 = R2:

$$V_2 - V_1 = \left[\left(\frac{2R1}{R_G}\right) + 1\right](e_2 - e_1) \qquad (3)$$

Also, for R3 = R5 = R4 = R6, the gain of $A_3 = 1$, and:

$$e_0 = (1)(V_2 - V_1) = (e_2 - e_1)\left[1 + \left(\frac{2R1}{R_G}\right)\right] \qquad (4)$$

As can be seen for identically matched resistors, e_{CM} is cancelled out, and the differential gain is dictated by equation (4).

For the LH0036, equation (4) reduces to:

$$A_{VCL} = \frac{e_0}{e_2 - e_1} = 1 + \frac{50k}{R_G} \qquad (5a)$$

The closed loop gain may be set to any value from 1 ($R_G = \infty$) to 1000 ($R_G \cong 50\Omega$). Equation (5a) re-arranged in more convenient form may be used to select R_G for a desired gain:

$$R_G = \frac{50k}{A_{VCL} - 1} \qquad (5b)$$

USE OF BANDWIDTH CONTROL (pin 1)

In the standard configuration, pin 1 of the LH0036 is simply grounded. The amplifier's slew rate in this configuration is typically 0.3V/μs and small signal bandwidth 350 kHz for $A_{VCL} = 1$. In some applications, particularly at low frequency, it may be desirable to limit bandwidth in order to minimize the overall noise bandwidth of the device. A resistor R_{BW} may be placed between pin 1 and ground to accomplish this purpose. Figure 2 shows typical small signal bandwidth versus R_{BW}.

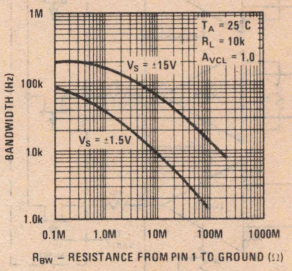

FIGURE 2. Bandwidth vs R_{BW}

It also should be noted that large signal bandwidth and slew rate may be adjusted down by use of R_{BW}. Figure 3 is plot of slew rate versus R_{BW}.

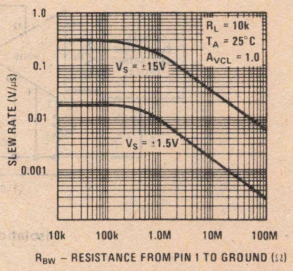

FIGURE 3. Output Slew Rate vs R_{BW}

CMRR CONSIDERATIONS

Use of Pin 9, CMRR Preset

Pin 9 should be grounded for nominal operation. An internal factory trimmed resistor, R6, will yield a CMRR in excess of 80 dB (for $A_{VCL} = 100$). Should a higher CMRR be desired, pin 9 should be left open and the procedure, in this section followed.

DC Off-set Voltage and Common Mode Rejection Adjustments

Off-set may be nulled using the circuit shown in Figure 4.

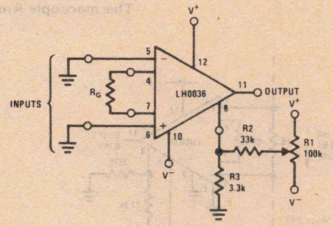

FIGURE 4. V_{OS} Adjustment Circuit

Pin 8 is also used to improve the common mode rejection ratio as shown in Figure 5. Null is

applications information (con't)

achieved by alternately applying ±10V (for V^+ & V^- = 15V) to the inputs and adjusting R1 for minimum change at the output.

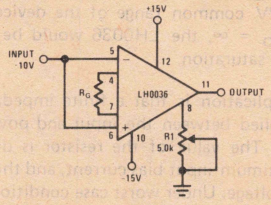

FIGURE 5. CMRR Adjustment Circuit

The circuits of Figure 4 and 5 may be combined as shown in Figure 6 to accomplish both V_{OS} and CMRR null. However, the V_{OS} and CMRR adjustment are interactive and several iterations are required. The procedure for null should start with the inputs grounded.

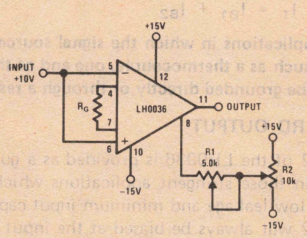

FIGURE 6. Combined CMRR, V_{OS} Adjustment Circuit

R2 is adjusted for V_{OS} null. An input of +10V is then applied and R1 is adjusted for CMRR null. The procedure is then repeated until the optimum is achieved.

A circuit which overcomes adjustment interaction is shown in Figure 7. In this case, R2 is adjusted first for output null of the LH0036. R1 is then adjusted for output null with +10V input. It is always a good idea to check CMRR null with a −10V input. The optimum null achievable will yield the highest CMRR over the amplifiers common mode range.

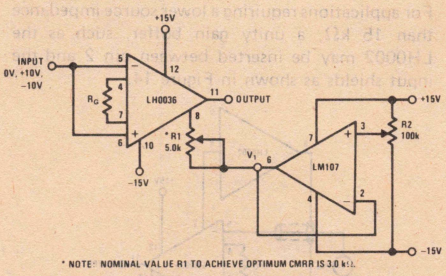

* NOTE: NOMINAL VALUE R1 TO ACHIEVE OPTIMUM CMRR IS 3.0 kΩ.

FIGURE 7. Improved V_{OS}, CMRR Nulling Circuit

AC CMRR Considerations

The ac CMRR may be improved using the circuit of Figure 8.

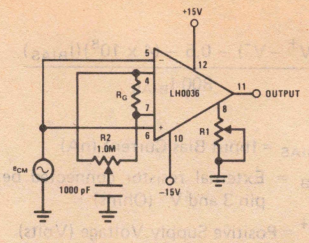

FIGURE 8. Improved AC CMRR Circuit

After adjusting R1 for best dc CMRR as before, R2 should be adjusted for minimum peak-to-peak voltage at the output while applying an ac common mode signal of the maximum amplitude and frequency of interest.

INPUT BIAS CURRENT CONTROL

Under nominal operating conditions (pin 3 grounded), the LH0036 requires input currents of 40 nA. The input current may be reduced by inserting a resistor (R_B) between 3 and ground or, alternatively, between 3 and V^-. For R_B returned to ground, the input bias current may be predicted by:

$$I_{BIAS} \cong \frac{V^+ - 0.5}{4 \times 10^8 + 800\ R_B} \qquad (6a)$$

or

$$R_B = \frac{V^+ - 0.5 - (4 \times 10^8)\ (I_{BIAS})}{800\ I_{BIAS}} \qquad (6b)$$

Where:

I_{BIAS} = Input Bias Current (nA)

R_B = External Resistor connected between pin 3 and ground (Ohms)

V^+ = Positive Supply Voltage (Volts)

Figure 9 is a plot of input bias current versus R_B.

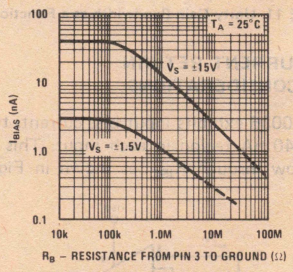

FIGURE 9. Input Bias Current as a Function of R_B

As indicated above, R_B may be returned to the negative supply voltage. Input bias current may then be predicted by:

$$I_{BIAS} \cong \frac{(V^+ - V^-) - 0.5}{4 \times 10^8 + 800\ R_B}$$

applications information (con't)

or

$$R_B \cong \frac{(V^+ - V^-) - 0.5 - (4 \times 10^8)(I_{BIAS})}{800\ I_{BIAS}} \qquad (8)$$

Where:

I_{BIAS} = Input Bias Current (nA)

R_B = External resistor connected between pin 3 and V^- (Ohms)

V^+ = Positive Supply Voltage (Volts)

V^- = Negative Supply Voltage (Volts)

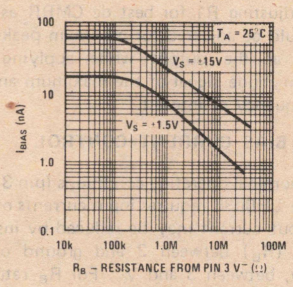

FIGURE 10. Input Bias Current as a Function of R_B

Figure 10 is a plot of input bias current versus R_B returned to V^- it should be noted that bandwidth is affected by changes in R_B. Figure 11 is a plot of bandwidth versus R_B.

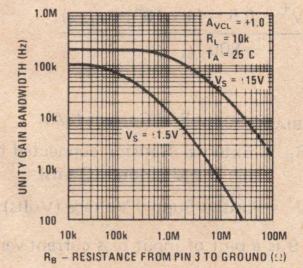

FIGURE 11. Unity Gain Bandwidth as a Function of R_B

BIAS CURRENT RETURN PATH CONSIDERATIONS

The LH0036 exhibits input bias currents typically in the 40 nA region in each input. This current must flow through R_{ISO} as shown in Figure 12.

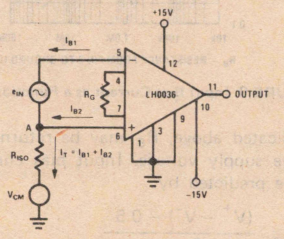

FIGURE 12. Bias Current Return Path

In a typical application, $V_S = \pm 15V$, $I_{B1} \cong I_{B2} \cong$ 40 nA, the total current, I_T, would flow through R_{ISO} causing a voltage rise at point A. For values of $R_{ISO} \geq 150\ M\Omega$, the voltage at point A exceeds the +12V common range of the device. Clearly, for $R_{ISO} = \infty$, the LH0036 would be driven to positive saturation.

The implication is that a finite impedance must be supplied between the input and power supply ground. The value of the resistor is dictated by the maximum input bias current, and the common mode voltage. Under worst case conditions:

$$R_{ISO} \leq \frac{V_{CMR} - V_{CM}}{I_T} \qquad (9)$$

Where:

V_{CMR} = Common Mode Range (10V for the LH0036)

V_{CM} = Common Mode Voltage

$I_T = I_{B1} + I_{B2}$

In applications in which the signal source is floating, such as a thermocouple, one end of the source may be grounded directly or through a resistor.

GUARD OUTPUT

Pin 2 of the LH0036 is provided as a guard drive pin in those stringent applications which require very low leakage and minimum input capacitance. Pin 2 will always be biased at the input common mode voltage. The source impedance looking into pin 2 is approximately 15 kΩ. Proper use of the guard/shield pin is shown in Figure 13.

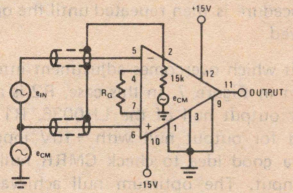

FIGURE 13. Use of Guard

For applications requiring a lower source impedance than 15 kΩ, a unity gain buffer, such as the LH0002 may be inserted between pin 2 and the input shields as shown in Figure 14.

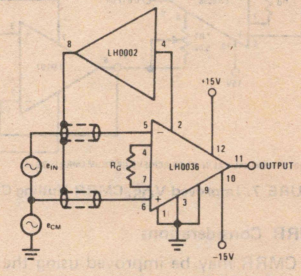

FIGURE 14. Guard Pin With Buffer

definition of terms

Bandwidth: The frequency at which the voltage gain is reduced to 0.707 of the low frequency (dc) value.

Closed Loop Gain, A_{VCL}: The ratio of the output voltage swing to the input voltage swing determined by $A_{VCL} = 1 + (50k/R_G)$. Where: R_G = Gain Set Resistor.

Common Mode Rejection Ratio: The ratio of input voltage range to the peak-to-peak change in offset voltage over this range.

Gain Equation Accuracy: The deviation of the actual closed loop gain from the predicted closed loop gain, $A_{VCL} = 1 + (50k/R_G)$ for the specified closed loop gain.

Input Bias Current: The current flowing at pin 5 and 6 under the specified operating conditions.

Input Offset Current: The difference between the input bias current at pins 5 and 6; i.e. $I_{OS} = |I_5 - I_6|$.

Input Stage Offset Voltage, V_{IOS}: The voltage which must be applied to the input pins to force the output to zero volts for $A_{VCL} = 100$.

Output Stage Offset Voltage, V_{OOS}: The voltage which must be applied to the input of the output stage to produce zero output voltage. It can be measured by measuring the overall offset at unity gain and subtracting V_{IOS}.

$$V_{OOS} = \left[V_{OS}\Big|_{A_{VCL}=1}\right] - \left[V_{OS}\Big|_{A_{VCL}=1000}\right]$$

Overall Offset Voltage:

$$V_{OS} = V_{IOS} + \frac{V_{OOS}}{A_{VCL}}$$

Power Supply Rejection Ratio: The ratio of the change in offset voltage, V_{OS}, to the change in supply voltage producing it.

Resistor, R_B: An optional resistor placed between pin 3 of the LH0036 and ground (or V^-) to reduce the input bias current.

Resistor, R_{BW}: An optional resistor placed between pin 1 of the LH0036 and ground (or V^-) to reduce the bandwidth of the output stage.

Resistor, R_G: A gain setting resistor connected between pins 4 and 7 of the LH0036 in order to program the gain from 1 to 1000.

Settling Time: The time between the initiation of an input step function and the time when the output voltage has settled to within a specified error band of the final output voltage.

National Semiconductor

LH0037/LH0037C Low Cost Instrumentation Amplifier

general description

The LH0037/LH0037C is a true instrumentation amplifier designed for precision differential signal processing. Extremely high accuracy can be obtained due to the 300 MΩ input impedance and excellent 100 dB common-mode rejection ratio. It is packaged in a hermetic TO-8 package. Gain is programmable with one external resistor from 1 to 1000. Power supply operating range is between ±5V and ±22V.

The LH0037 is specified for operation over the −55°C to +125°C temperature range and the LH0037C is specified for operation over the −25°C to +85°C temperature range.

features

- High input impedance 300 MΩ
- High CMRR 100 dB
- Single resistor gain adjust 1 to 1000
- Low power 250 mW
- Wide supply range ±5V to ±22V
- Guard drive output

equivalent circuit and connection diagrams

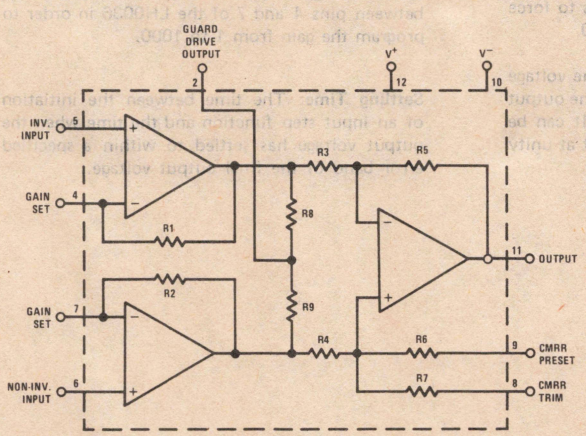

Metal Can Package

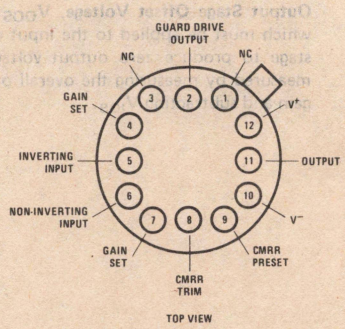

Order Number LH0037G or LH0037CG
See Package H12B

typical applications

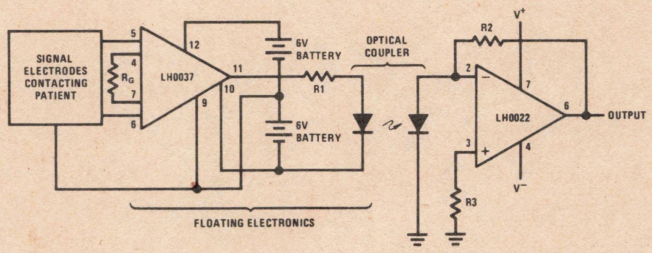

Isolation Amplifier for Medical Telemetry

absolute maximum ratings

Supply Voltage	±22V	Short Circuit Duration	Continuous
Differential Input Voltage	±30V	Operating Temperature Range	
Input Voltage Range	$\pm V_S$	LH0037	−55°C to +125°C
Shield Drive Voltage	$\pm V_S$	LH0037C	−25°C to +85°C
CMRR Preset Voltage	$\pm V_S$	Storage Temperature Range	−65°C to +150°C
CMRR Trim Voltage	$\pm V_S$	Lead Temperature (Soldering, 10 seconds)	300°C
Power Dissipation (Note 3)	1.5W		

electrical characteristics (Notes 1 and 2)

PARAMETER	CONDITIONS	LIMITS						UNITS
		LH0037			LH0037C			
		MIN	TYP	MAX	MIN	TYP	MAX	
Input Offset Voltage (V_{IOS})	R_S = 1.0 kΩ, T_A = 25°C		0.5	1.0		1.0	2.0	mV
	R_S = 1.0 kΩ			2.0			3.0	mV
Output Offset Voltage (V_{OOS})	R_S = 1.0 kΩ, T_A = 25°C		2.0	5.0		5.0	10	mV
	R_S = 1.0 kΩ			6.0			12	mV
Input Offset Voltage Tempco ($\Delta V_{IOS}/\Delta T$)	$R_S \leq$ 1.0 kΩ		10			10		μV/°C
Output Offset Voltage Tempco ($\Delta V_{OOS}/\Delta T$)			15			15		μV/°C
Overall Offset Referred to Input (V_{OS})	A_V = 1.0		2.5			6.0		mV
	A_V = 10		0.7			1.5		mV
	A_V = 100		0.52			1.05		mV
	A_V = 1000		0.502			1.005		mV
Input Bias Current (I_B)	T_A = 25°C		200	500		200	500	nA
				1.5			0.8	μA
Input Offset Current (I_{OS})	T_A = 25°C			100			250	nA
				200			250	
Small Signal Bandwidth	A_V = 1.0, R_L = 2 kΩ		350			350		kHz
	A_V = 10, R_L = 2 kΩ		35			35		kHz
	A_V = 100, R_L = 2 kΩ		3.5			3.5		kHz
	A_V = 1000, R_L = 2 kΩ		350			350		Hz
Full Power Bandwidth	V_{IN} = ±10V, R_L = 2 kΩ, A_V = 1		5.0			5.0		kHz
Input Voltage Range	Differential	±12			±12			V
	Common Mode	±12			±12			V
Gain Nonlinearity			0.03			0.03		%
Deviation From Gain Equation Formula	A_V = 1 to 1000		±0.3	±1		±1.0	±3	%
PSRR	±5.0V $\leq V_S \leq$ ±15V, A_V = 1.0		1.0	2.5		1.0	5	mV/V
	±5.0V $\leq V_S \leq$ ±15V, A_V = 100		0.05	0.25		0.10	0.25	mV/V
CMRR	A_V = 1.0 DC to		1.0	2.5		2.5	5.0	mV/V
	A_V = 10 100 Hz		0.1	0.25		0.25	1.0	mV/V
	A_V = 100 ΔR_S = 1.0k		25	100		25	100	μV/V
Output Voltage	R_L = 2 kΩ	10	13		10	13		V
Output Resistance			0.5			0.5		Ω
Supply Current			4.5	8.4		4.5	8.4	mA
Slew Rate	ΔV_{IN} = ±10V, R_L = 2 kΩ, A_V = 1.0		0.5			0.5		V/μs
Settling Time	To ±10 mV, R_L = 2 kΩ, ΔV_{OUT} = 1.0V							
	A_V = 1.0		3.8			3.8		μs
	A_V = 100		180			180		μs

Note 1: Unless otherwise specified, all specifications apply for V_S = ±15V, pin 9 grounded, −25°C to +85°C for the LH0037C and −55°C to +125°C for the LH0037.

Note 2: All typical values are for T_A = 25°C.

Note 3: The maximum junction temperature is 150°C. For operation at elevated temperature derate the G package on a thermal resistance of 90°C/W, above 25°C.

typical performance characteristics

Closed Loop Voltage Gain

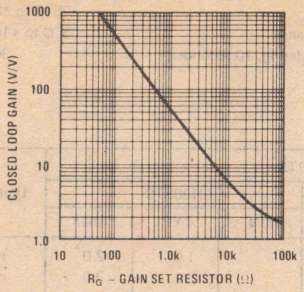

Output Voltage Swing vs Frequency

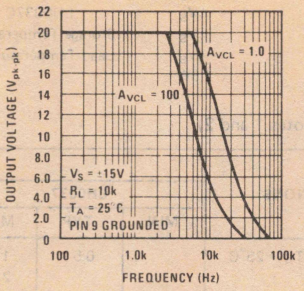

Large Signal Pulse Response

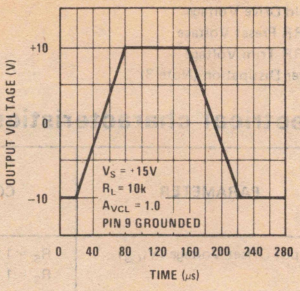

typical applications (con't)

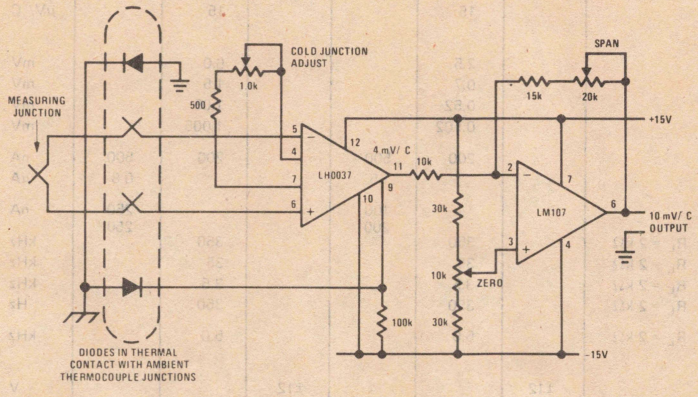

Thermocouple Amplifier with Cold Junction Compensation

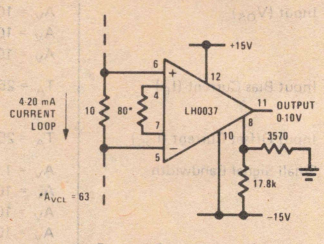

Process Control Interface

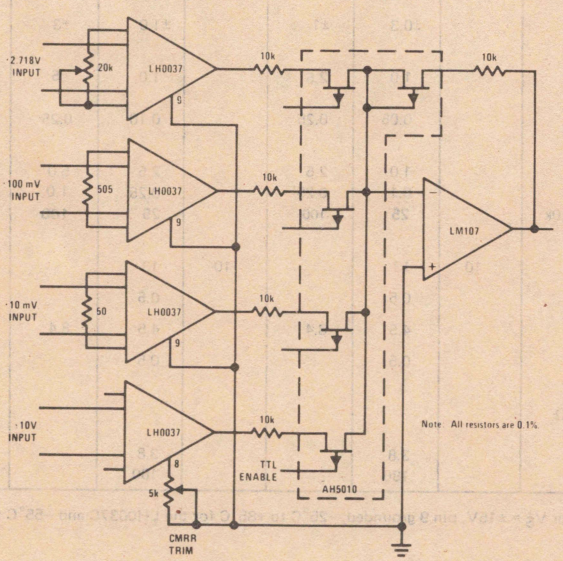

Pre MUX Signal Conditioning

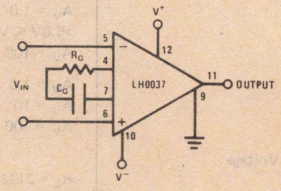

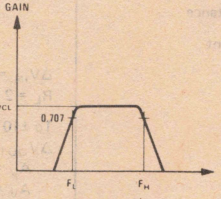

$F_L = \frac{1}{2\pi R_G C_G}$

F_H = a function of selected A_{VCL}

High Pass Filter

National Semiconductor

Amplifiers

LH0038/LH0038C True Instrumentation Amplifier

General Description

The LH0038/LH0038C is a precision true instrumentation amplifier (TIA) capable of amplifying very low level signals, such as thermocouple and low impedance strain guage outputs. Precision thin film gain setting resistors are included in the package to allow the user to set the closed-loop gain from 100 to 2000. Since the resistors are of a homogeneous single chip construction, they track almost perfectly so that temperature variations of closed loop gain are virtually eliminated.

LH0038 exhibits excellent CMRR, PSRR, gain linearity, as well as extremely low input offset voltage, offset voltage drift and input noise voltage.

The devices are provided in a hermetically sealed 16-lead DIP. The LH0038 is guaranteed from −55°C to +125°C; whereas the LH0038C is guaranteed from −25°C to +85°C.

Features

- Ultralow offset voltage 25 μV typ., 100 μV max
- Ultralow offset drift 0.25 μV/C max
- Ultralow input noise 0.2 μVp-p
- Pin strap gain options 100, 200, 400, 500, 1k, 2k
- Excellent PSRR and CMRR 120 dB

Simplified Schematic Diagram

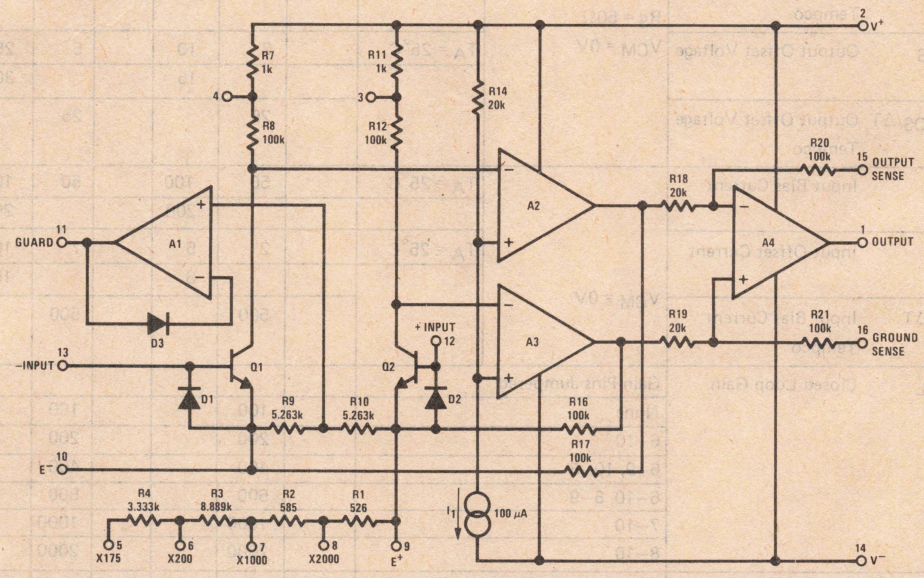

Connection Diagram

Dual-In-Line Package

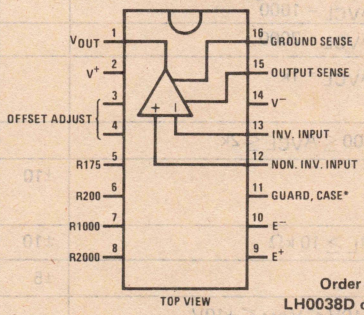

Order Number
LH0038D or LH0038CD

*Guard output is connected to the case.

Absolute Maximum Ratings

Supply Voltage	±18V
Differential Input Voltage (Note 1)	±1V
Input Voltage	$\pm V_S$
Power Dissipation (See Curve)	500 mW
Short Circuit Duration	Continuous
Operating Temperature Range	
LH0038	−55°C to +125°C
LH0038C	−25°C to +85°C
Storage Temperature	−65°C to +150°C
Lead Temperature (Soldering, 20 seconds)	300°C

DC Electrical Characteristics (Note 2)

PARAMETER		CONDITIONS		LH0038			LH0038C			UNITS
				MIN	TYP	MAX	MIN	TYP	MAX	
V_{IOS}	Input Offset Voltage	$R_S = 50\Omega$, $V_{CM} = 0V$	$T_A = 25°C$		25	100		30	150	μV
						125			220	
$\Delta V_{IOS}/\Delta T$	Input Offset Voltage Tempco				0.1	0.25		0.2	1.0	μV/°C
V_{OOS}	Output Offset Voltage		$T_A = 25°C$		3	10		5	25	mV
						15			30	
$\Delta V_{OOS}/\Delta T$	Output Offset Voltage Tempco				25			25		μV/°C
I_B	Input Bias Current	$V_{CM} = 0V$	$T_A = 25°C$		50	100		50	100	nA
						200			200	
I_{OS}	Input Offset Current		$T_A = 25°C$		2	5		7	10	
						8			15	
$\Delta I_B/\Delta T$	Input Bias Current Tempco				500			500		pA/°C
A_{VCL}	Closed Loop Gain	Gain Pins Jumpered								V/V
		None			100			100		
		6–10			200			200		
		6–9, 10–5			400			400		
		6–10, 5–9			500			500		
		7–10			1000			1000		
		8–10			2000			2000		
	Closed Loop Gain Error	$A_{VCL} = 100, 200$			0.1	0.3		0.1	0.4	%
		$A_{VCL} = 400, 500$			0.2	0.3		0.2	0.6	
		$A_{VCL} = 1000$			0.3	0.5		0.5	1.0	
		$A_{VCL} = 2000$			1.0	2.0		1.5	3.0	
	Gain Temperature Coefficient	$A_{VCL} = 1k$			7			7		ppm/°C
	Gain Nonlinearity	$100 \leq A_{VCL} \leq 2k$			1			1		ppm
V_{INCM}	Common-Mode Input Voltage Range			±10	±12		±10	±12		V
V_O	Output Voltage	$R_L \geq 10\ k\Omega$		±10	±12		±10	±12		
V_S	Supply Voltage Range			±5		±18	±5		±18	
	Guard Voltage Error	$-10V < V_{CM} < +10V$			±10	±100		±10	±100	mV

DC Electrical Characteristics (Note 2) (Continued)

PARAMETER		CONDITIONS		LH0038			LH0038C			UNITS
				MIN	TYP	MAX	MIN	TYP	MAX	
CMRR	Common-Mode Rejection Ratio	$V_{IN} = \pm 10V$	$A_{VCL} = 100$	94	110		86	110		dB
			$A_{VCL} = 1000$	114	120		106	110		
PSRR	Power Supply Rejection Ratio	$\pm 5V \leq \Delta V_S \leq \pm 15V$	$A_{VCL} = 100$	94	110		94	110		
			$A_{VCL} = 1000$	110	120		100	110		
I_{OSC}	Output Short Circuit Current	$T_A = 25°C$		±2	±5	±10	±2	±5	±10	mA
I_S	Supply Current	$T_A = 25°C$			1.6	2.0		1.6	3.0	
R_{IN} DIFF	Input Resistance	$A_{VCL} = 1000$, $T_A = 25°C$			5			5		MΩ
R_{IN} CM	Common-Mode Input Resistance				1			1		GΩ
R_{OUT}	Output Resistance				1			1		mΩ

AC Electrical Characteristics $V_S = \pm 15V$, $T_A = 25°C$

PARAMETER		COMMENT	CONDITIONS		TYP	UNITS
e_n	Equivalent Input Noise Voltage	*Figure 1*	$R_S = 0$, f = 0.1 to 10 Hz		0.2	μVp-p
$\overline{e_n}$	Equivalent Input Spot Noise Voltage	*Figure 1*	$R_S = 100\Omega$	f = 10 Hz	6.5	$nV/\sqrt{Hz}$
				f = 100 Hz	6.0	
				f = 1 kHz	6.0	
				f = 10 kHz	6.0	
BW	Large Signal Bandwidth		$V_{OUT} = \pm 10V$		1.6	kHz
S_r	Slew Rate		$V_{OUT} = \pm 10V$		0.3	V/μs
t_s	Settling Time to 0.01%	*Figure 13*		20V Step	120	μs
				−10V Step	80	
				+10V Step	60	
t_r	Rise Time		$\Delta V_{OUT} = 100$ mV	$A_{VCL} = 100$	6	μs
				$A_{VCL} = 1000$	13	
$\overline{i_n}$	Equivalent Input Spot Noise Current		$R_S = 100$ MΩ	f = 10 Hz	0.1	$pA/\sqrt{Hz}$

Note 1: The inputs are protected by diodes for overvoltage protection. Excessive currents will flow for differential voltages in excess of ±1V. Input current should be limited to less than 10 mA.

Note 2: Unless otherwise noted these specifications apply for $V_S = \pm 15.0V$, pin 15 connected to pin 1, pin 16 connected to ground, over the temperature range −55°C to +125°C for the LH0038 and −25°C to +85°C for LH0038C.

Typical Performance Characteristics

Power Dissipation

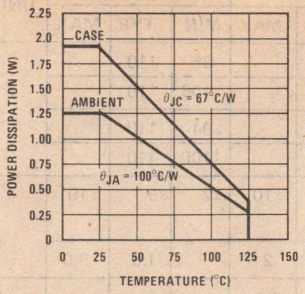

Input Bias Current

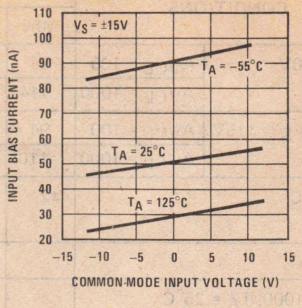

Input Bias Current

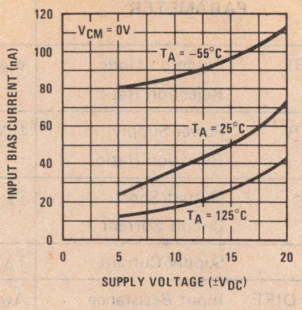

Closed Loop Frequency Response

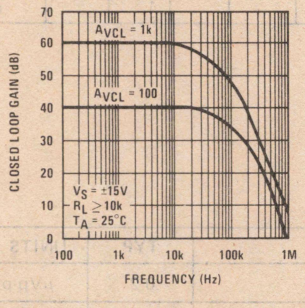

Common-Mode Rejection

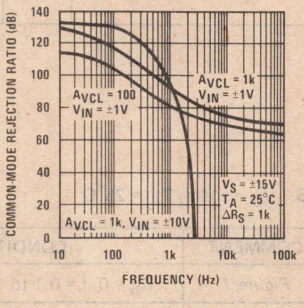

Power Supply Rejection

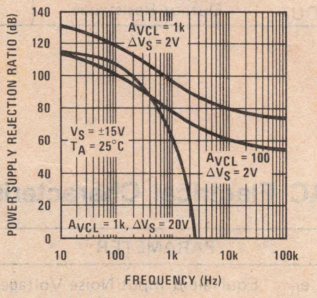

Input Noise Voltage (Includes Source Impedance)

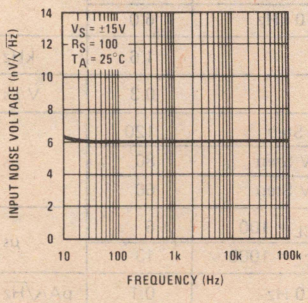

Output Swing

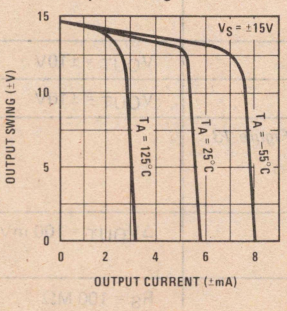

Supply Current

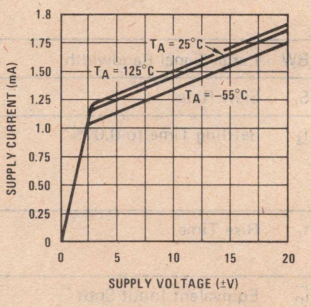

Wide Band Noise

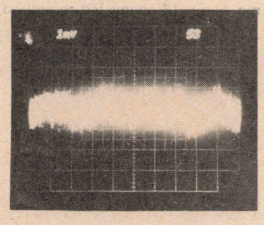

$V_S = \pm 15V$, $R_S = 1k\Omega$, $A_V = 10k$, DUT = 1k
Vertical sensitivity: 0.1 μV/CM
Horizontal sensitivity: 5 sec/CM
Bandwidth: 0.1 Hz to 10 Hz

Pulse Response

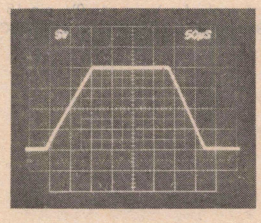

$V_S = \pm 15V$
$R_L \geq 10k\Omega$
$A_{VCL} = 1k$

Rise Time

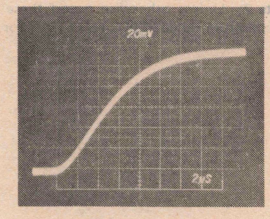

$V_S = \pm 15V$
$R_L \geq 10k\Omega$
$A_{VCL} = 1k$

Noise Test Circuit

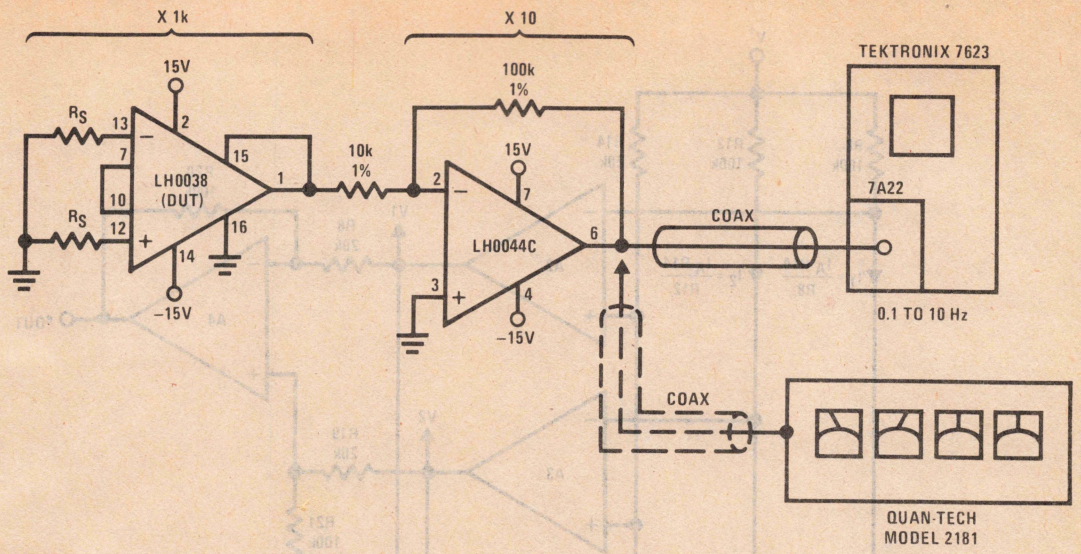

FIGURE 1.

Typical Application

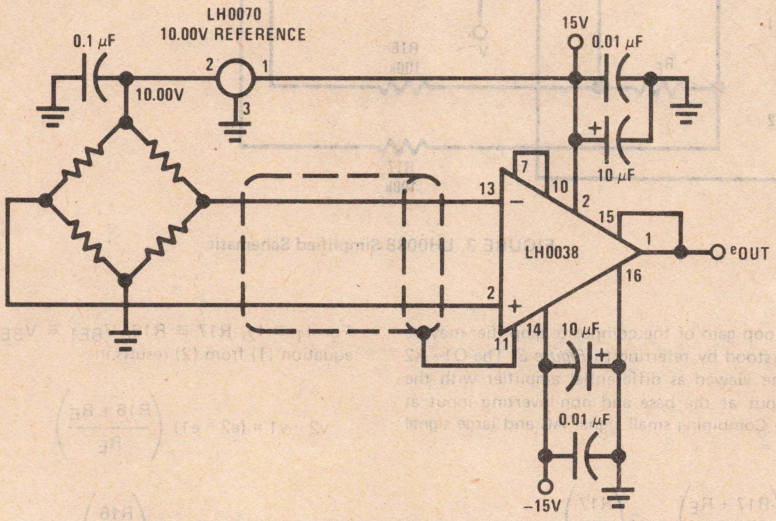

FIGURE 2. X1000 Bridge Amplifier

Applications Information

THEORY OF OPERATION

The LH0038 is a 3-stage, true instrumentation amplifier composed of a well matched transistor differential pair, Q1 and Q2, a common-mode loop amplifier, A2 and A3, and a differential to single ended amplifier, A4. A simplified schematic is shown in *Figure 3*.

Current source, I_A, establishes a voltage across R14 of approximately 2V, which results in a 2V drop across R8 and R12. This constant voltage forces the first stage current to be 20 μA per side. The action of A2 and A3 is such that 20 μA is maintained constant despite the presence of common-mode signals. The differential outputs of A2 and A3 are applied to differential amplifier, A4, which converts the signal to a single-ended output and provides a gain of 5. The total gain of the amplifier is, therefore, the fixed gain of 5 multiplied by the gain of the composite input stage.

Applications Information (Continued)

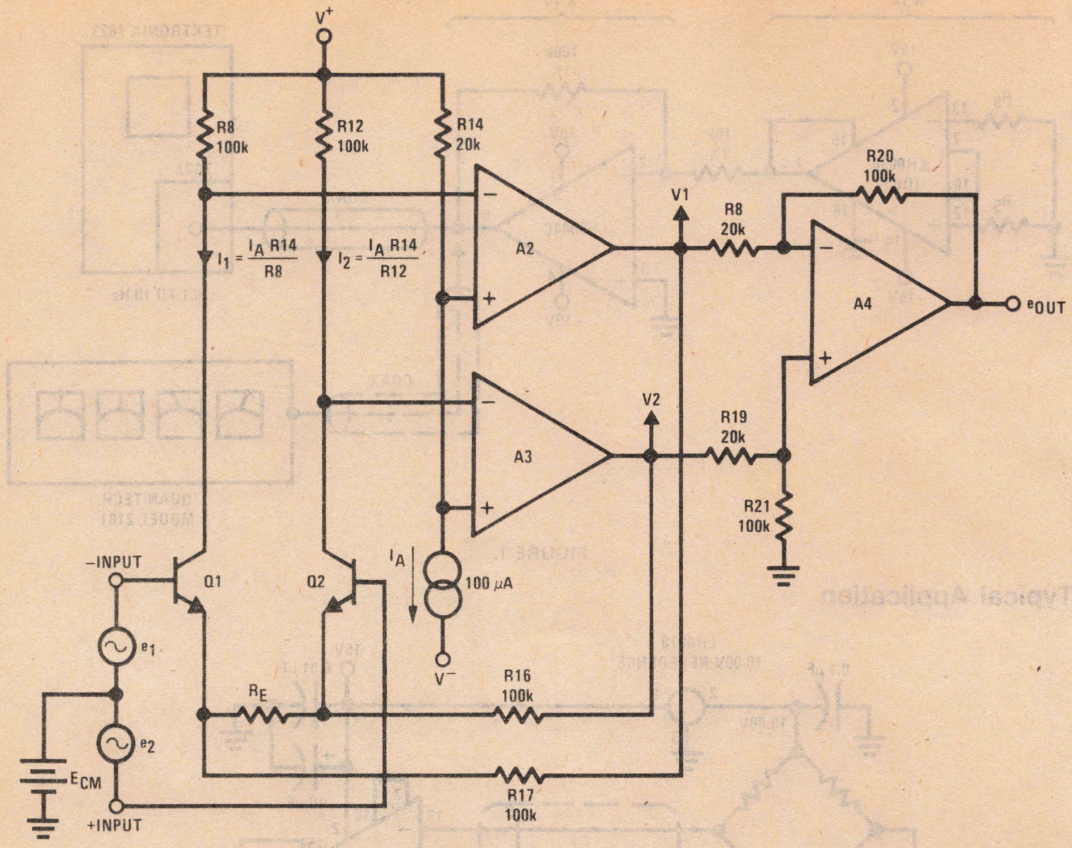

FIGURE 3. LH0038 Simplified Schematic

The closed loop gain of the composite amplifier may be better understood by referring to *Figure 3*. The Q1–A2 loop may be viewed as differential amplifier with the inverting input at the base and non-inverting input at the emitter. Combining small signal AC and large signal DC analysis =

$$v1 = e1\left(\frac{R17 + R_E}{R_E}\right) - e2\left(\frac{R17}{R_E}\right) + E_{CM} - V_{BE1} - I_1 R17 \quad (1)$$

By similar analysis:

$$v2 = e2\left(\frac{R16 + R_E}{R_E}\right) - e1\left(\frac{R16}{R_E}\right) + E_{CM} - V_{BE2} - I_2 R16 \quad (2)$$

For $I_1 \equiv I_2$, $R17 \equiv R16$, $V_{BE1} \equiv V_{BE2}$, subtracting equation (1) from (2) results in:

$$v2 - v1 = (e2 - e1)\left(\frac{R16 + R_E}{R_E}\right) + (e2 - e1)\left(\frac{R16}{R_E}\right) \quad (3)$$

$$\frac{v2 - v1}{e2 - e1} = \frac{2\,R16}{R_E} + 1 \quad (4)$$

Applications Information (Continued)

The differential input voltage (v2 − v1) is amplified by the closed loop gain of A4:

$$e_{OUT} = (A_{VCL4})\,(e2 - e1) \qquad (5)$$

where:

$$A_{VCL4} = \frac{R20}{R8} = 5.00$$

$$\boxed{A_{VCL} = 5\left(\frac{2R16}{R_E} + 1\right)} \qquad (6)$$

As an example, with all gain pins open, R_E = 10.526 kΩ, and:

$$A_{VCL} = 5\left(\frac{(2)\,(100k)}{10.526k} + 1\right) \qquad (7)$$

$$= 100.0$$

All other closed loop gain configurations place a precision resistor in parallel with R_E(R9 + R10). For example, for a gain of 200, pin 6 is connected to pin 10 and the gain is predicted by:

$$A_{VCL} = 5.00\left[\frac{(2)\,(100k)}{(10.526k)\,\|\,(10.000k)} + 1\right] \qquad (8)$$

$$= (5.00)\,(40) = 200$$

CLOSED LOOP GAIN CONSIDERATIONS USING INTERNAL RESISTORS

Table I summarizes the primary gain configurations available with the LH0038. Obviously, other gains are possible. Using the internally supplied resistors has the advantage that R16, R17, and R_E all track thermally, minimizing the device's gain error as a function of temperature.

Gain adjustment by paralleling or series padding internally supplied resistors is generally discouraged since external resistors will generally not thermally track. It is recommended that the gain adjustment be done in a subsequent stage as shown in *Figure 4.*

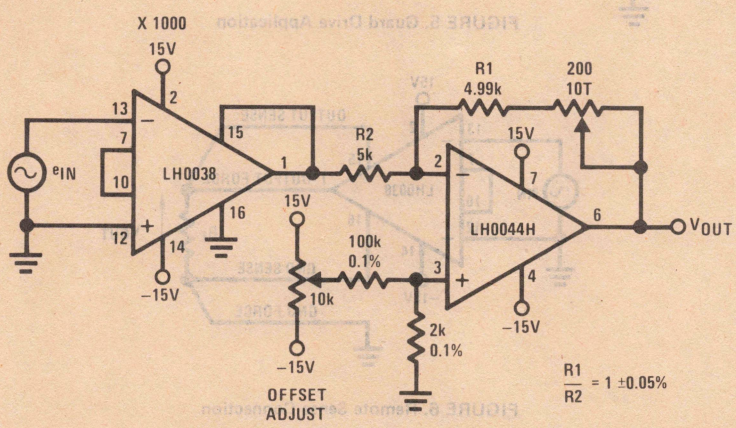

FIGURE 4. Recommended Gain Adjust Circuit

TABLE I. LH0038 INTERNAL GAIN CONFIGURATIONS

OVERALL GAIN	FIRST STAGE GAIN	PIN CONNECTIONS	EFFECTIVE R_E
100	20	All Gain Pins Open	10.5260 kΩ
200	40	Pin 6 to Pin 10	5.1281 kΩ
400	80	Pin 6 to Pin 9, Pin 10 to Pin 5	2.5316 kΩ
500	100	Pin 6 to Pin 10, Pin 9 to Pin 5	2.0202 kΩ
1000	200	Pin 7 to Pin 10	1.0050 kΩ
2000	400	Pin 8 to Pin 10	0.5013 kΩ

Applications Information (Continued)

GUARD DRIVE

The LH0038 is provided with a guard drive output, which will always be at the input common-mode voltage. The guard drive amplifier is short-circuit proof and is capable of driving several thousand pF without danger of latch-up or oscillation.

The guard drive tied to a shielded input cable will greatly reduce noise pick-up, and also improve AC CMRR by maintaining the shield at the common-mode voltage. *Figure 5* illustrates the proper use of the guard drive.

The guard drive output is also connected to the case to provide electrostatic shielding to the system.

REMOTE OUTPUT SENSE

The feedback network of the LH0038 may be closed directly at the load in order to eliminate errors due to lead resistance. Also, a unity gain buffer; e.g. LH0002, may be included within the feedback loop to increase output current capability as shown in *Figure 7.*

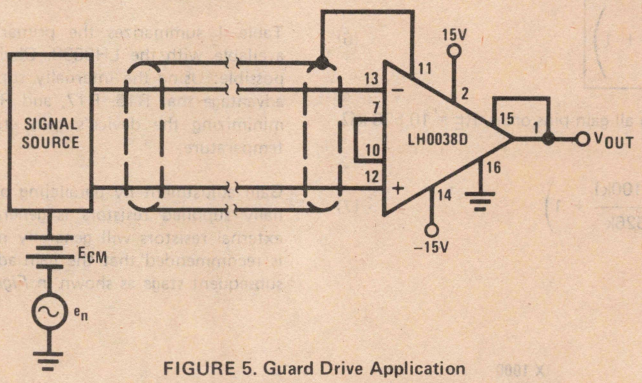

FIGURE 5. Guard Drive Application

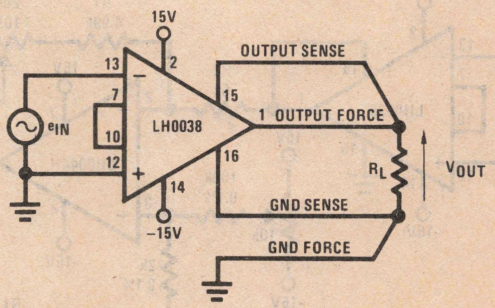

FIGURE 6. Remote Sense Connection

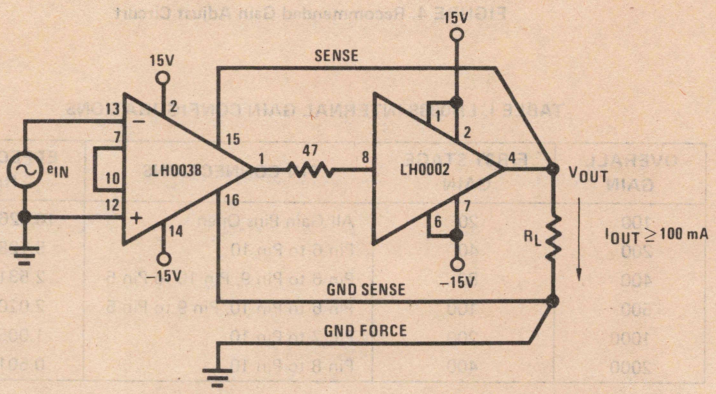

FIGURE 7. Output Buffer Connection

Applications Information (Continued)

OFFSET NULL

Offset of the LH0038 is trimmed by the factory to a very low value. The offset may be further trimmed using a 10 kΩ, 10 turn, 100 ppm/°C potentiometer as shown in *Figure 8*. However, a drift increase of 0.3 μV/°C will be caused for each 100 μV of offset adjusted. The recommended offset null is shown in *Figure 4* and is accomplished in the following stage.

BIAS CURRENT CONSIDERATIONS

The LH0038 exhibits bias current of approximately 50 nA per side, and requires a path to ground or supply. The practical limitation to the maximum resistance between the inputs and ground is dictated by negative common-mode range as shown in *Figure 9*. For example, for $V_{CM} = -10V$, $R_{CM} \leq 20\ M\Omega$.

The LH0038 input stage bias was optimized for minimum voltage noise so the input bias currents are higher than might otherwise be expected. Note, however, that the input currents are very well matched, resulting in an offset current value much lower than one might infer from the bias current. In order to take advantage of this low offset current, the source impedances at both inputs should be matched to minimize DC drift. Further, bias current is relatively constant with temperature (as opposed to an FET stage), so one can consider bias current compensation schemes such as shown in *Figure 10*. The danger with such techniques is that the offset current and noise contributed by the bias current compensator will dominate the system noise.

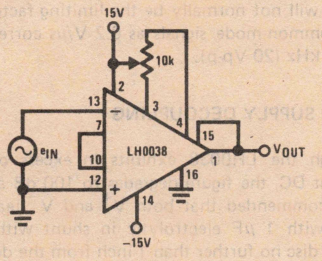

FIGURE 8. Offset Adjust Circuit
(See also *Figure 4*)

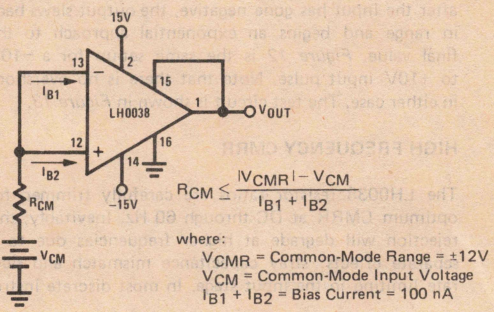

FIGURE 9. Bias Current Return

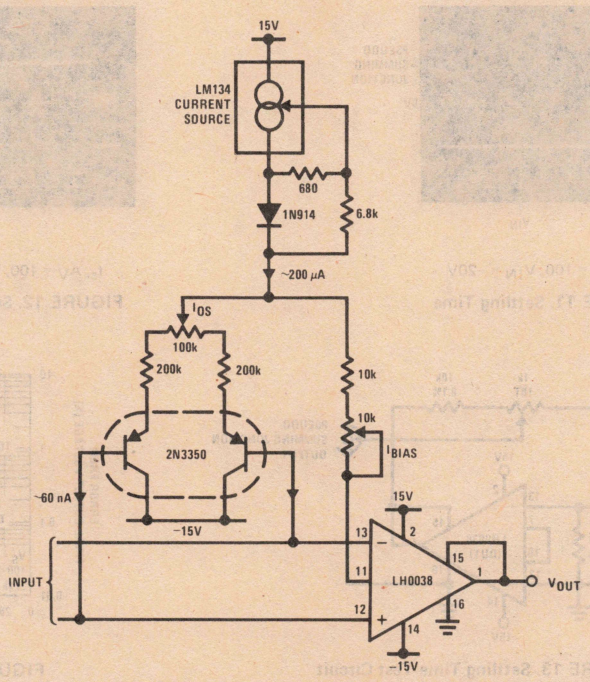

FIGURE 10. Bias Current Compensation

Applications Information (Continued)

SETTLING TIME

The LH0038 has been purposely over-compensated, and is therefore remarkably free from any undesirable transient response. Small signal settling time is governed by gain-bandwidth product; large signal settling time is dominated by slew rate.

Figure 11 shows an input voltage step of +10V to −10V applied, through a 1000 to 1 voltage divider, to the device configured for an inverting gain of 1000. The output of the device will therefore be equal to the negative of the input after the device is completely settled. By resistively subtracting the input before the divider from the device output, a pseudo summing node is generated. The voltage at this pseudo summing junction goes "off screen" on the photos, since in the first small time increment the input goes instantaneously to −10 mV and the output is still at +10V. About 130 μs after the input has gone negative, the output slews back in range and begins an exponential approach to the final value. *Figure 12* is the same set-up for a −10V to +10V input pulse. Note that there is no overshoot in either case. The test circuit is shown in *Figure 13*.

HIGH FREQUENCY CMRR

The LH0038 resistor ratios are carefully trimmed for optimum CMRR at DC through 60 Hz. Inevitably, this rejection will degrade at higher frequencies due to 2 separate effects: stray capacitance mismatch and slew rate limiting in the input stage. In most discrete instrumentation amplifier realizations, the stray capacitance mismatch dominates simply because the stray capacitances are relatively large (this can be trimmed out in a discrete amplifier). In a hybrid circuit such as the LH0038, stray capacitance is minimized, so the effects of mismatch are also minimized.

The response to a pulse or noise spike applied as a common-mode signal may be dominated by the slew characteristics of the input stage. Whenever the common-mode input slew rate exceeds 0.2 V/μs, the 2 input amplifiers will apply identical ramp signals to the final stage and cause its output to go to near 0V. Note that the amplifier is not really active under these conditions as normal mode signal variations will *not* be coupled to the output. Some time may be required for the amplifier to settle after a transient of this kind before the output can be considered representative of the input. Slew rate limiting will not normally be the limiting factor for sine wave common-mode signals as 0.2 V/μs corresponds to about 2 kHz (20 Vp-p).

POWER SUPPLY DECOUPLING

Although the LH0038 exhibits in excess of 120 dB PSRR at DC, the figure degrades to 100 dB at 120 Hz. It is recommended that both V^+ and V^- leads be bypassed with 1 μF electrolytic in shunt with 0.01 μF ceramic disc no further than 1 inch from the device.

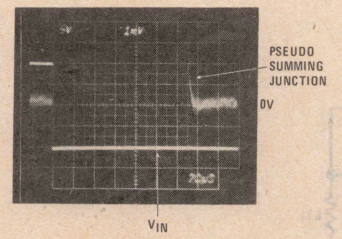

t_s, A_V = 100, V_{IN} = −20V

FIGURE 11. Settling Time

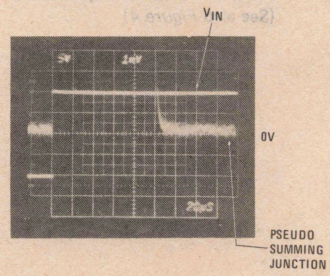

t_s, A_V = 100, V_{IN} = 20V

FIGURE 12. Settling Time

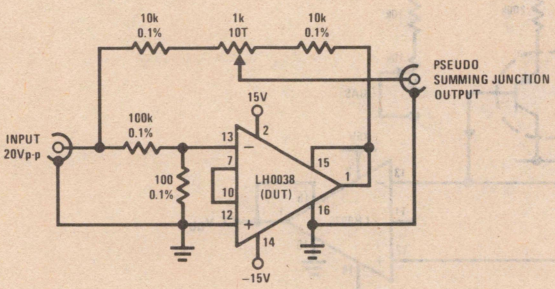

FIGURE 13. Settling Time Test Circuit

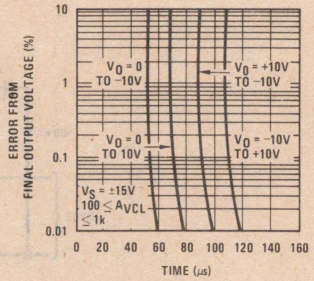

FIGURE 14. Settling Time

Definition of Terms

Bandwidth: That frequency at which the voltage gain is reduced to 3 dB below the low frequency value.

Common-Mode Rejection Ratio, CMRR: The ratio of the input common-mode voltage range to the peak-to-peak change in input offset voltage over this range.

Input Offset Voltage, V_{IOS}: The voltage which must be applied to the inputs to force the outputs of the input stage to 0V. V_{IOS} can be calculated by measuring V_{OS} at closed loop gains of 100 and 2000 and using the following equation:

$$V_{IOS} = \frac{(V_{OS})\,2k - (V_{OS})\,100}{1900}$$

Where:

$(V_{OS})2k$ = overall offset voltage for A_{VCL} = 2k.

$(V_{OS})100$ = overall offset voltage for A_{VCL} = 100.

Gain Non-Linearity: The deviation of the gain from a straight line drawn through the end points expressed as a percent of full-scale (10V for operations on ±15V supply). Note that this is a more stringent specification than deviation from the best straight line and is double the number that would be specified if the percentage were based on a 20V (±10V) range.

Guard Voltage Error: The voltage difference between the guard drive output and the average of the 2 input voltages.

Input Bias Current, I_B: The average of the 2 input currents.

Input Common-Mode Voltage Range, V_{INCM}: The range of voltages on the input terminals for which the amplifier is operational. Note that the specifications are not guaranteed over the full common-mode voltage range unless specifically stated.

Input Offset Current, I_{OS}: The difference in the currents into the 2 input terminals when the output is at zero.

Input Resistance: The ratio of the change in input voltage to the change in input current on either input with the other grounded.

Overall Offset Voltage, V_{OS}: The output voltage when both inputs are connected to 0V. V_{OS} is composed of input amplifier offset voltage effects, V_{IOS}, and output amplifier effects, V_{OOS}. It is given by:

$$V_{OS} = (A_{VCL})\,(V_{IOS}) - V_{OOS}$$

Where:

A_{VCL} = closed loop gain = 100 to 2k

V_{IOS} = input stage offset voltage

V_{OOS} = output stage offset voltage

Output Offset Voltage, V_{OOS}: The output voltage when the outputs of the input stage are forced to 0V. V_{OOS} may be calculated by measuring V_{OS} at closed loop gains of 100 and 2000 and using the following equation:

$$V_{OOS} = \frac{(20)\,(V_{OS})\,100 - (V_{OS})\,2k}{19}$$

Where:

$(V_{OS})\,100$ = overall offset voltage for A_{VCL} = 100

$(V_{OS})\,2k$ = overall offset voltage for A_{VCL}

Output Voltage, V_O: The peak output voltage swing, referred to zero.

Offset Voltage Temperature Drift, $\Delta V_{IOS}/\Delta T$: The average drift rate of offset voltage for a thermal variation from room temperature to the indicated temperature extreme.

Power Supply Rejection Ratio, PSRR: The ratio of the change in input offset voltage to the change in power supply voltages producing it.

Settling Times, t_s: The time between the initiation of the input step function and the time when the output voltage has settled to within a specified error band of the final output voltage.

Slew Rate, S_r: The internally-limited rate of change in output voltage with a large-amplitude step function applied to the input.

Supply Current, $\pm I_s$: The current required from the power supply to operate the amplifier with no load and the output midway between the supplies.

Supply Voltage Range: The range of voltages on the supply terminals for which the device is operational. Note that the specifications are not guaranteed over the full supply voltage range unless specifically stated.

Transient Response, t_r: The closed-loop step-function response of the amplifier under small-signal conditions.

Unity Gain Bandwidth: The frequency range from DC to the frequency where the amplifier open loop gain rolls off to 1.

Closed Loop Gain, A_{VCL}: The ratio of output voltage to input voltage under the stated conditions of source resistance (R_S) and load resistance (R_L).

Voltage Gain Error: The deviation in percent between the ideal voltage gain and the value obtained when the device is configured for that gain.

National Semiconductor

Amplifiers

PRELIMINARY

LH0084/LH0084C Digitally Programmable Gain Instrumentation Amplifier

General Description

The LH0084/LH0084C is a self-contained, high pseed, high accuracy, digitally programmable gain instrumentation amplifier. It consists of a FET input, variable gain voltage follower input stage followed by a differential output stage. The input stage is programmable to accurate gain steps of 1, 2, 5, or 10 controlled by the logic levels of a 2-bit TTL-compatible digital input word. For additional flexibility, the output stage is pin-strappable to fixed gains of 1, 4, or 10 for an overall gain range of 1 to 100.

Applications include increased dynamic range A-to-D converters, test systems, and post multiplexer amplifier for data acquisition systems where its short settling time speeds channel sampling.

The device exhibits high input impedance, low offset voltage, high CMRR and PSRR, high speed, and excellent gain accuracy and gain non-linearily.

The LH0084 is guaranteed for operation from −55°C to +125°C, whereas the LH0084C is guaranteed from −25°C to +85°C. Both devices are provided in a hermetically sealed 16-lead dual-in-line metal package.

Features

- Excellent gain accuracy and gain non-linearity — 0.002% typ
- Extremely low gain drift — 1 ppm/°C
- High input impedance — 10 Ω typ
- High CMRR and PSRR — 76 dB min
- TTL-compatible digital inputs
- High speed, settling to 0.1% — 5 μs max

Simplified Schematic

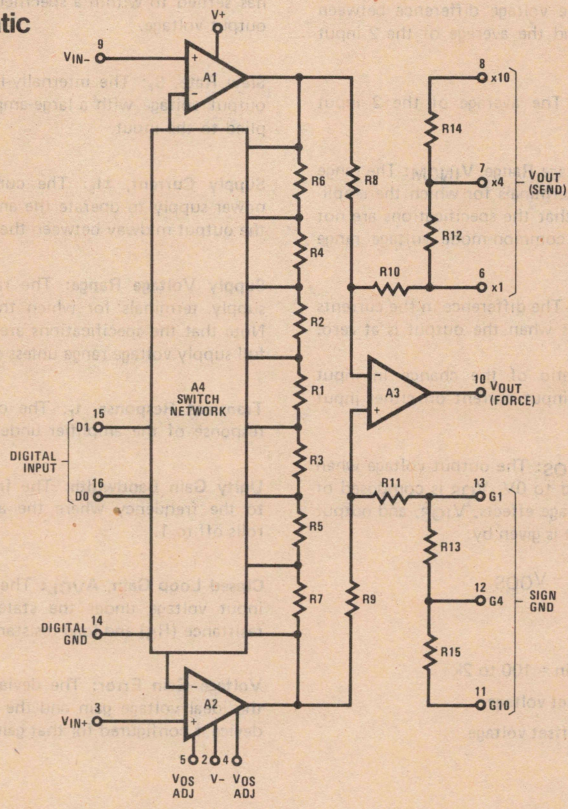

National Semiconductor

Amplifiers

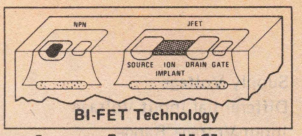

BI-FET Technology

LF152/LF252/LF352 FET Input Instrumentation Amplifier

general description

The LF152 series is the first monolithic JFET input instrumentation amplifier. The well-matched high voltage JFET input devices provide very high input impedance and extremely low bias currents, making the LF152 ideal in applications where high source impedances are encountered.

The LF152 very accurately amplifies a differential input signal and rejects common-mode signal and noise. It is not an op amp, but operates with an internal closed loop gain connection which allows good linearity with no external feedback. The LF152 eliminates the need for extremely precise resistor matching to obtain high common-mode rejection (CMR) and provides high input impedance as compared to the use of conventional op amps connected as a difference amplifier.

The LF152 utilizes internal differential current feedback eliminating the need for precision external feedback components. The amplifier gain can be easily adjusted from 1 to 1000 by changing the value of a single resistor. The transfer function for the LF152 is highly accurate because it has a very low initial gain error and non-linearity. The bandwidth and slew rate are externally controlled and the sense input and device output are pinned out separately for added versatility.

features

- JFET inputs
- High input impedance — $2 \times 10^{12}\Omega$
- Low bias currents — 3 pA
- Low noise currents — 0.01 pA rms
- Low gain nonlinearity — 0.02%
- High common-mode rejection ratio (G = 100) — 110 dB min
- Single resistor gain adjust
- External compensation for extended gain and frequency ranges
- Both input and output offset adjust capability to allow a change of gain without rezeroing
- Low supply current — 1 mA

connection diagram

Dual-In-Line Package

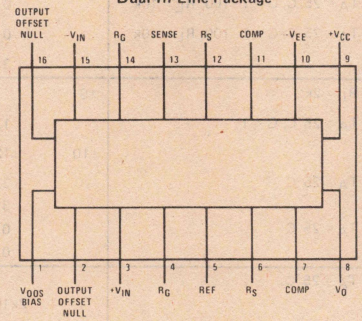

Order Number LF152D, LF252D or LF352D
See NS Package D16C

simplified schematic

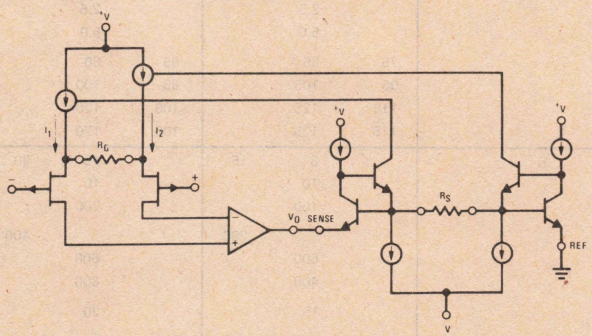

FIGURE 1

typical circuit

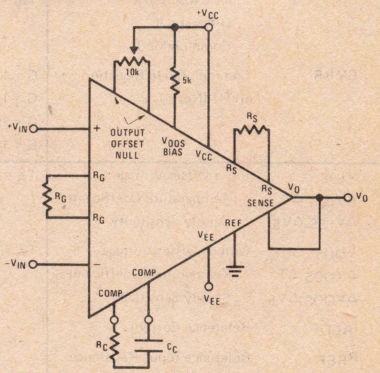

FIGURE 2

absolute maximum ratings

	LF152	LF252	LF352
Supply Voltage	±22V	±18V	±18V
Differential Input Voltage	±44V	±36V	±36V
Input Voltage Range	±22V	±18V	±18V
Output Short Circuit Duration	Continuous	Continuous	Continuous
Power Dissipation and Thermal Resistance (Note 1)			
Cavity DIP (D) P_D (25°C)	900 mW	900 mW	900 mW
θ_{jA}	100°C/W	100°C/W	100°C/W
Maximum Junction Temperature	+150°C	+110°C	+100°C
Operating Temperature Range	$-55°C \leq T_A \leq +125°C$	$-25°C \leq T_A \leq +85°C$	$0°C \leq T_A \leq +70°C$
Storage Temperature Range	$-65°C \leq T_A \leq +150°C$	$-65°C \leq T_A \leq +150°C$	$-65°C \leq T_A \leq +150°C$
Lead Temperature (Soldering, 60 seconds)	300°C	300°C	300°C

dc electrical characteristics (Notes 2 and 3)

	PARAMETER	CONDITIONS	LF152			LF252/LF352			UNITS
			MIN	TYP	MAX	MIN	TYP	MAX	
G_R	Gain Range	$R_C = 160\Omega$, $C_C = 0.002\mu F$	1		1000	1		1000	
G	Gain Equation	$G = R_S/R_G$							
G_E	Error From Gain Equation	$T_A = 25$ C, G = 1–100, $R_L = 10k$		0.05	0.1		0.05	0.2	%
G_{NL}	Gain Nonlinearity	$T_A = 25$ C, G = 1–100, $R_L = 10k$		0.02	0.05		0.02	0.1	%
$\Delta G\ \Delta T$	Gain Temperature Coefficient			3			3		ppm/°C
V_O	Output Voltage Range	$R_L = 2k$	±9			±9			V
R_O	Output Resistance	$T_A = 25$ C, G = 1		1.2			1.5		Ω
V_{IN}	Input Voltage Range		±10	±12		±10	±12		V
I_B	Input Bias Current	$T_A = 25$ C		3	20		3	40	pA
				3	20		0.2	3	nA
I_{IO}	Input Offset Current	$T_A = 25$ C		0.5	10		0.5	20	pA
				0.3	2.0		0.05	0.6	nA
R_{IN}	Input Resistance	$T_A = 25$ C							
	Differential			2×10^{12}			2×10^{12}		Ω
	Common-Mode			2×10^{12}			2×10^{12}		Ω
C_{IN}	Input Capacitance	$T_A = 25$ C							
	Differential			2.5			2.5		pF
	Common-Mode			5.0			5.0		pF
CMRR	Common-Mode Rejection	G = 1	75	85		65	80		dB
	(RTI) (Note 4)	G = 10	95	105		85	100		dB
		G = 100	110	125		100	120		dB
		G = 1000	115	125		105	120		dB
V_{IOS}	Input Offset Voltage	$T_A = 25$ C		8	15		15	30	mV
$\Delta V_{IOS}\ \Delta T$	Temperature Coefficient			10			10		μV/°C
$\Delta V_{IOS}\ \Delta V_S$	Supply Sensitivity			100			200		μV/V
V_{OOS}	Output Offset Voltage	$T_A = 25$ C			200			400	mV
$\Delta V_{OOS}\ \Delta T$	Temperature Coefficient			600			600		μV/°C
$\Delta V_{OOS}\ \Delta V_S$	Supply Sensitivity			400			800		μV/V
I_{REF}	Reference Current			15			20		μA
R_{REF}	Reference Input Resistance			500			250		MΩ
I_S	Supply Current	$T_A = 25$ C		0.7	2.2		1.2	2.2	mA

ac electrical characteristics (Notes 2 and 3)

PARAMETER		CONDITIONS	LF152 MIN	LF152 TYP	LF152 MAX	LF252/LF352 MIN	LF252/LF352 TYP	LF252/LF352 MAX	UNITS
e_n	Noise Voltage (RTI) (Note 5)	T_A = 25°C							
		0.1 Hz to 10 Hz		1.3+670/G			1.3+670/G		μVp-p
		10 Hz to 10 kHz		8+450/G			8+450/G		μVrms
i_n	Noise Current (RTI) (Note 5)	T_A = 25°C, 10 Hz to 10 kHz		0.01			0.01		pArms
GBW	Small Signal Bandwidth	T_A = 25°C, −3 dB							
		G = 1		140			140		kHz
		G = 10		50			50		kHz
		G = 100		30			30		kHz
		G = 1000		7			7		kHz
		T_A = 25°C, −1% Flatness							
		G = 1		5			5		kHz
		G = 10		4			4		kHz
		G = 100		2			2		kHz
		G = 1000		1.5			1.5		kHz
PBW	Full-Power Bandwidth			25			25		kHz
SR	Slew Rate			1			1		V/μs
t_s	Settling Time 0.1%	T_A = 25°C							
		G = 1		15			15		μs
		G = 10		15			15		μs
		G = 100		40			40		μs
		G = 1000		200			200		μs

Note 1: The maximum power dissipation for these devices must be derated at elevated temperatures and is dictated by $T_{j\,MAX}$, θ_{jA}, and the ambient temperature, T_A. The maximum available power dissipation at any temperature is $P_D = (T_{J\,MAX} - T_A)/\theta_{jA}$ or the 25°C $P_{D\,MAX}$, whichever is less.

Note 2: These specifications apply for $V_S = \pm 15V$ and over the absolute maximum operating temperature range ($T_L \leq T_A \leq T_H$) unless otherwise noted. Parameters are specified for $R_C = 160\Omega$, $C_C = 0.002\mu F$, and a proper layout such as the PC board in *Figure 7*, which is laid out for *Figure 2 and Figure 4*.

Note 3: If V_{OOS} adjust is not used, pins 1, 2 and 16 **MUST** be shorted to V_{CC}.

Note 4: Referred to input (RTI). May be referred to output by subtracting gain in dB.

Note 5: Referred to input (RTI). May be referred to output by multiplying by gain G.

typical performance characteristics

Input Bias Current

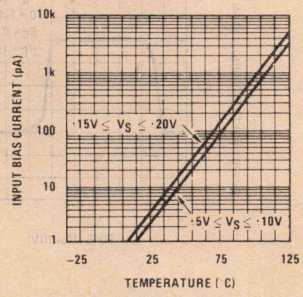

Supply Current

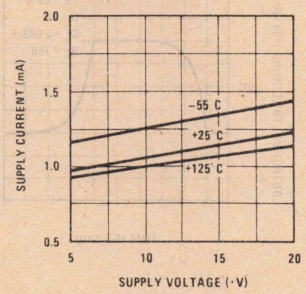

Gain Nonlinearity

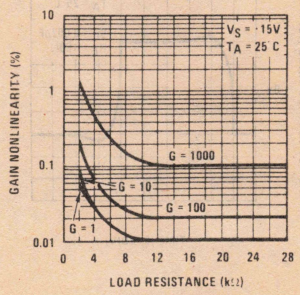

Positive Common-Mode Input Voltage Limit

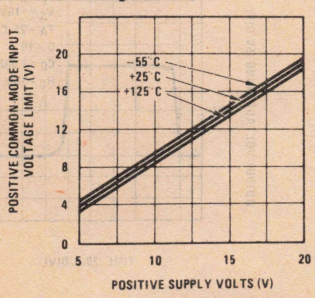

Negative Common-Mode Input Voltage Limit

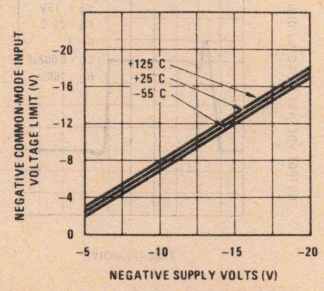

Positive Current Limit

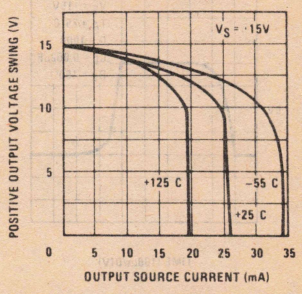

typical performance characteristics (con't)

Negative Current Limit

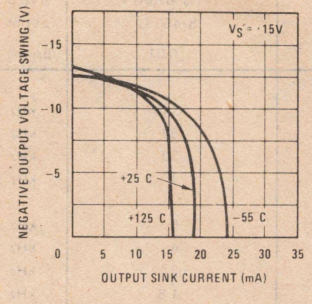

Common-Mode Rejection Ratio (RTI)

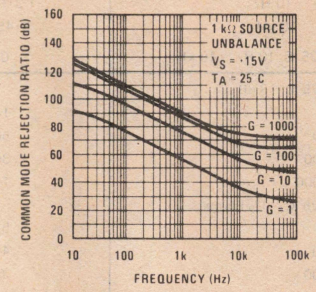

Common-Mode Rejection Ratio (RTI)

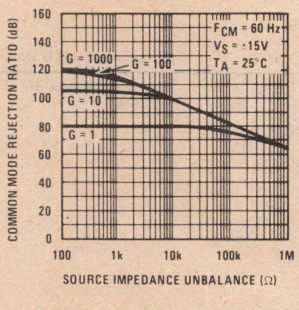

Frequency Response

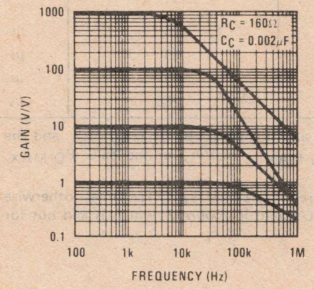

Positive Power Supply Rejection Ratio (RTI)

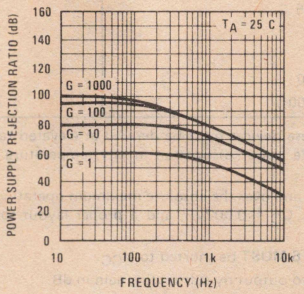

Negative Power Supply Rejection Ratio (RTI)

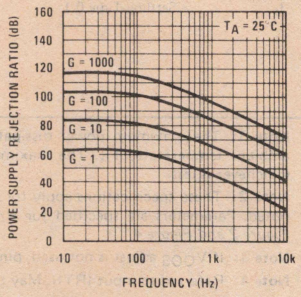

Small Signal Pulse Response (G = 1)

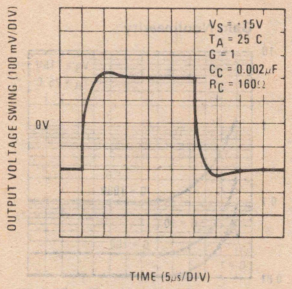

Small Signal Pulse Response (G = 10)

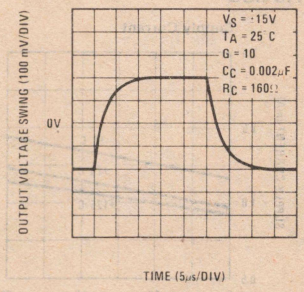

Small Signal Pulse Response (G = 100)

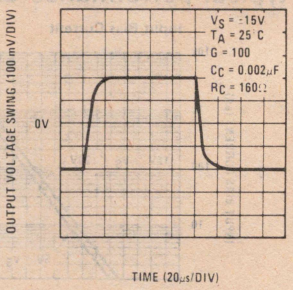

Small Signal Pulse Response (G = 1000)

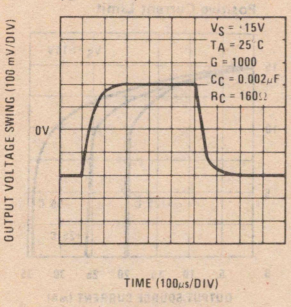

Large Signal Pulse Response (G = 1)

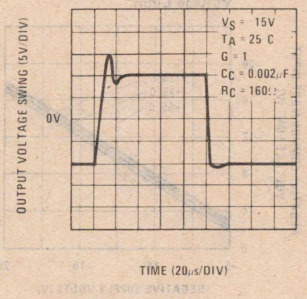

Large Signal Pulse Response (G = 10)

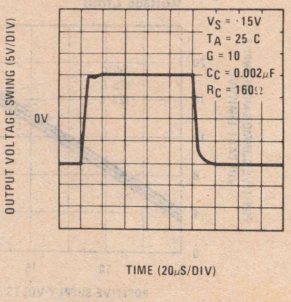

typical performance characteristics (con't)

Large Signal Pulse Response (G = 100)

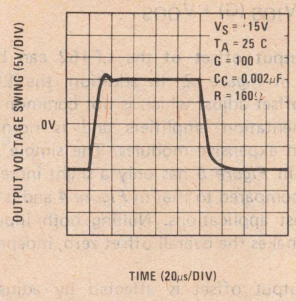

Large Signal Pulse Response (G = 1000)

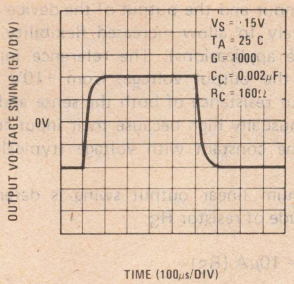

Equivalent Input Noise Voltage

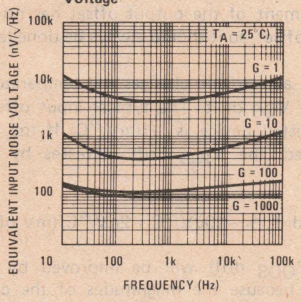

Output Resistance

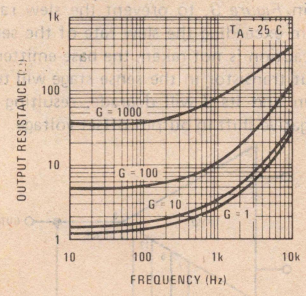

application hints

BASIC OPERATION

The LF152 is a monolithic JFET input differential current feedback instrumentation amplifier. The BI-FET process used to fabricate the LF152 makes it possible to take advantage of JFETs throughout the design. In the simplified schematic of *Figure 1,* the differential input voltage is impressed across resistor R_G via the input JFETs, while the difference between the sense and reference voltages is impressed across the resistor R_S. The gain of the amplifier is determined by the ratio of resistor R_S to resistor R_G ($G = R_S/R_G$). (For clarity let's follow a signal through the amplifier:)

In *Figure 1*, let $R_G = R_S = 1\ M\Omega$, the (–) input be grounded, and the (+) input be 1V; the output should be 1V. The 1V signal applied develops 1μA through R_G from right to left and unbalances the current drive to the second stage amplifier. The additional current driven into the (+) input of the second stage amplifier causes the output to increase. As V_O increases, the sense input voltage increases and the left side of R_S also increases. When the sense input has risen 1V, 1μA will flow through R_S from left to right and, thus, subtract 1μA from I_1. An opposite action simultaneously occurs in I2 which brings the currents into the second stage and thus the system back into balance.

The LF152 series is designed to optimize key parameters in instrumentation amplifiers. The device has very high common-mode rejection, low gain non-linearity, extremely low bias currents and very high input impedance.

INPUTS

The P-channel JFET input devices of the LF152 series provide very low bias currents and very high input impedances.

The maximum differential input voltage is independent of the supply voltages, however, neither of the input voltages should be allowed to exceed the negative supply, as this will cause large currents to flow, which can result in a destroyed unit.

Exceeding the negative voltage range on either input will cause a reversal of phase to the output and force the amplifier output to the corresponding high or low state. Exceeding the negative input voltage range on both inputs will force the amplifier output to a high state. Exceeding the positive input voltage range on a single input will not change the phase of the output; however, gain linearity will degrade. If both inputs exceed the positive input voltage range, the output of the amplifier will be forced to a high state.

The common-mode slew rate of the inputs should be limited to 5V/μs to insure low input bias currents.

application hints (con't)

USING THE SENSE, REFERENCE, AND OUTPUT PINS

The sense input and the output of the device are pinned out separately to allow increased flexibility in system designs (see applications). The reference input allows biasing of the output voltage, from +10V to −10V. The ac input resistance of both the sense and reference inputs is unusually high because their input currents are forced to be constant with voltage (typically 20μA).

The maximum linear output swing is determined by the magnitude of resistor R_S:

$$|V_{O\,MAX}| = 10\mu A\ (R_S)$$

If the output of the amplifier is to be abruptly changed more than 6V, a PNP transistor should be connected, as shown in *Figure 3*, to prevent the slew rate of the output from exceeding the slew rate of the sense stage. If this precaution is not taken, the base-emitter junction of the input transistor in the sense stage will transiently break down and its β will degrade, resulting in a permanent negative shift in output offset voltage.

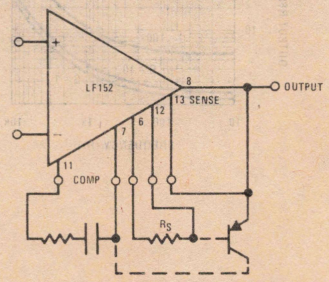

FIGURE 3. Large Signal Transient Suppression

OFFSET VOLTAGE

Because of the two stage design of the instrumentation amplifier, there are two independent contributors to offset voltage (V_{OS}). The output offset (V_{OOS}) is independent of gain while the input offset (V_{IOS}) is multiplied by the gain of the amplifier to the output.

$$V_{OS} = V_{IOS}\,(G) + V_{OOS}$$

The output offset of the LF152 can be adjusted as shown in *Figure 2*. In addition, the LF152 features input offset adjust which is not common to monolithic instrumentation amplifiers and is normally available only on expensive modules. The simple adjust scheme shown in *Figure 5* has only a slight increase in non-linearity compared to that of *Figure 4* and is recommended for most applications. Nulling both input and output offset makes the overall offset zero, independent of gain.

The output offset is affected by adjustment of the input offset. For every mV of input offset adjust, the output offset will change by approximately 32 mV. Adjustment of the output offset has no effect on the input offset, so it should always be done last.

Offset adjustment changes the temperature coefficient of the V_{OS} drift. The typical input offset drift of the unadjusted device is −10μV/°C. If the input offset is adjusted, the V_{IOS} drift increases by approximately

$$V_{IOS}\ \text{drift} \approx -10\mu V/^{\circ}C + 2\mu V/^{\circ}C/(\text{mV of adjustment})$$

The V_{OOS} drift will be improved by output offset adjust because the magnitudes of the current sources adjusted become less sensitive to V_{BE} variations. If V_{OOS} adjust is not used, pins 1, 2 and 16 must be shorted to the positive supply for circuit operation.

OFFSET VOLTAGE ADJUSTMENT PROCEDURE

For gains less than 100, only output offset adjustment is needed. For gains greater than 100, input offset adjust is usually necessary since the input offset voltage amplified to the output may be out of the range of the output offset adjust. Input offset adjust is also needed if zero overall offset is desired while varying the amplifier gain.

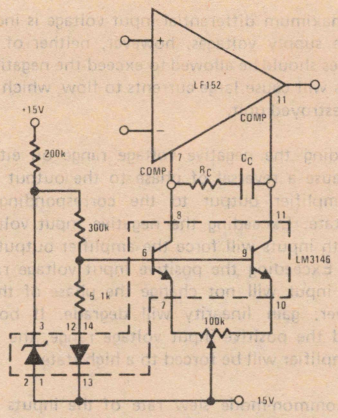

FIGURE 4. Input Offset Adjust

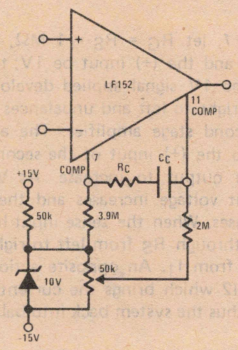

FIGURE 5. Simple Input Offset Adjust

application hints (con't)

To adjust the input offset, the following procedure should be used:

The effective input offset voltage appears directly across R_G when both inputs are connected to ground, and can be measured by a voltmeter referenced to ground. This offset error across R_G can be zeroed by the input offset adjustment circuit shown in *Figure 4 or 5.* The remaining error at the output is strictly due to the output offset voltage which can then be nulled out with the circuit shown in *Figure 2.* The amplifier is now offset nulled independent of gain.

COMPENSATION

The variable bandwidth and slew rate of the LF152 are controlled by an RC network between the compensation pins of the amplifier as shown in *Figure 2.* R_C and C_C may be varied for optimum operating characteristics in a particular application.

Layout of accompanying circuitry may influence the value of this RC network. The lead lengths to resistors R_S and R_G should be minimized and the capacitance from these nodes should also be minimized for optimum frequency response. If $R_C = 160\Omega$ and $C_C = 0.002\mu F$ in the printed circuit board of *Figure 7,* the amplifier will be compensated for all gains from 1 to 1000. Gains from 0.1 to 10,000 may be obtained with different compensation.

GAIN ERROR AND NONLINEARITY

Gain error of the LF152 is the error between the average slope of the transfer function compared to the slope of R_S/R_G. In the LF152, the small gain error is essentially constant with gain and may be nulled out by trimming R_S.

Of the existing monolithic instrumentation amplifiers, the LF152 is among the lowest in gain nonlinearity error. Gain nonlinearity is the curvature of the transfer function from the theoretically perfect function as shown in *Figure 6.*

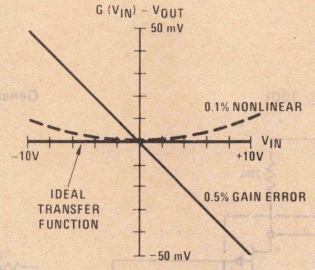

FIGURE 6. Gain Error and Nonlinearity

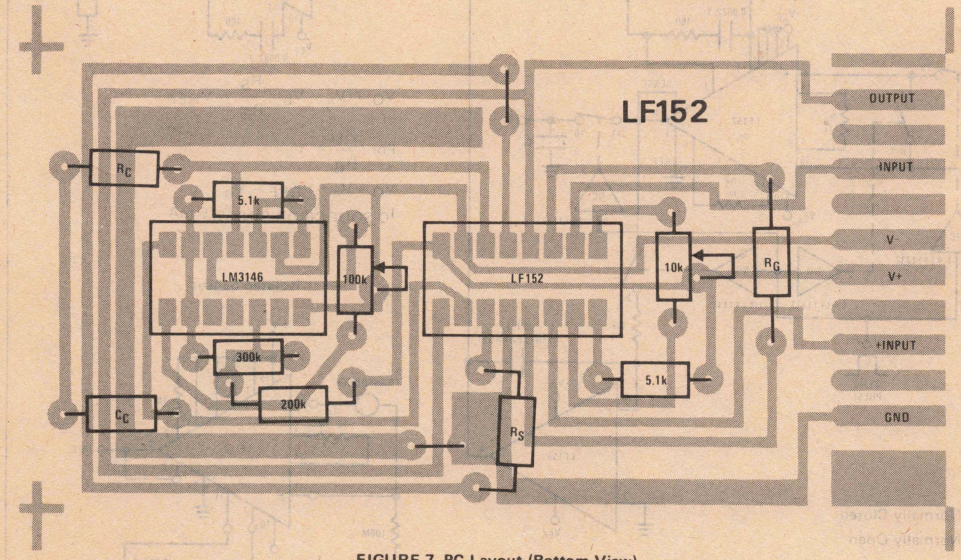

FIGURE 7. PC Layout (Bottom View)

detailed schematic

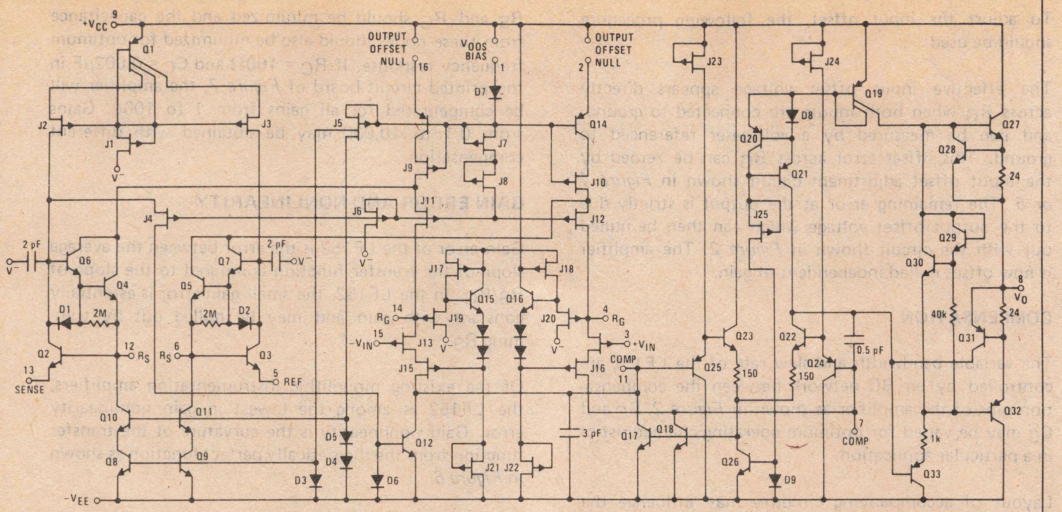

typical applications

Automatic V_{IOS} Adjust ($G \geq 100$)

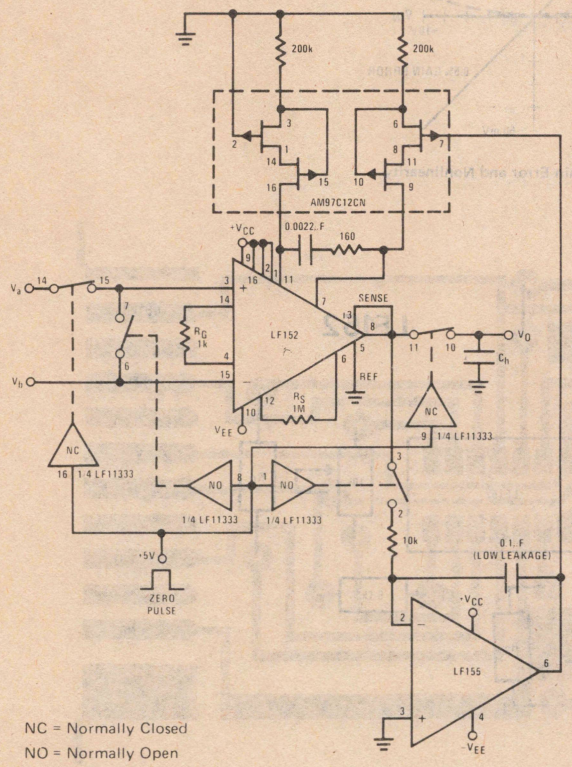

NC = Normally Closed

NO = Normally Open

Minimum pulse width to drive V_O to zero is 400μs.

General Purpose Instrumentation Amplifier

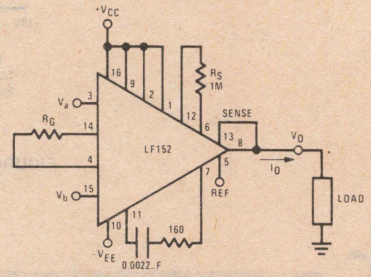

$$V_O = (V_a - V_b)\frac{R_S}{R_G} + V_{REF}$$

For $\frac{R_S}{R_G} = 1$

$V_O = V_a + V_{REF} - V_b$

I_O SOURCE OR SINK $\leq$ 5 mA

Isolated Sensor

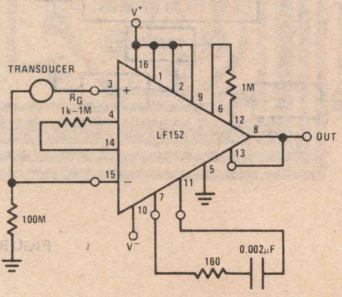

typical applications (con't)

Automatic V_{OOS} Adjust (For G ≤ 100)

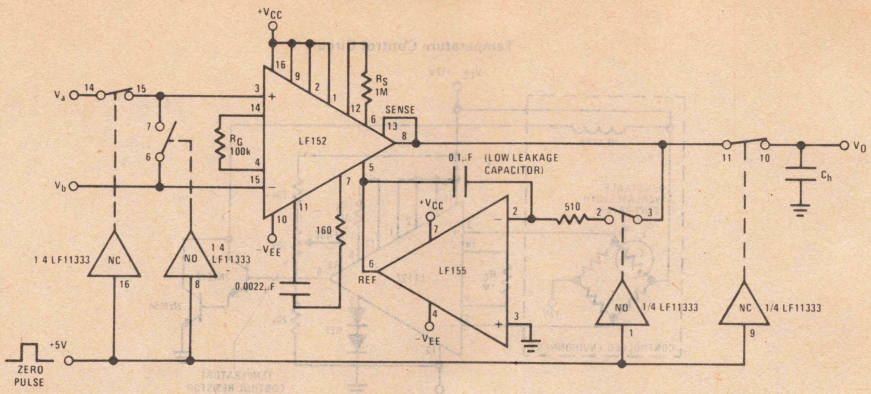

Minimum pulse width to drive V_O to zero is 450μs

NC = Normally Closed
NO = Normally Open

AC Active Guard Drive

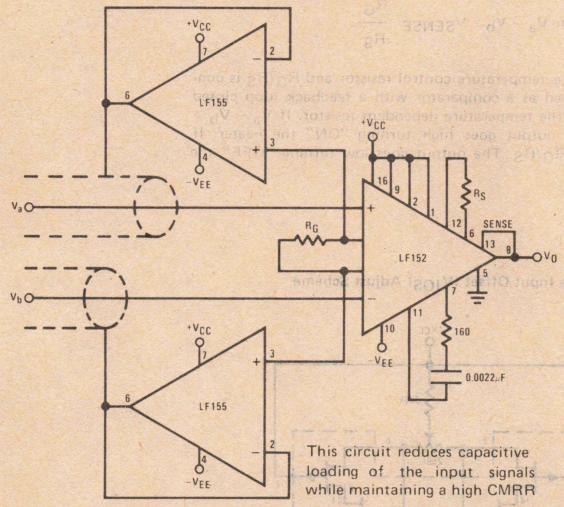

This circuit reduces capacitive loading of the input signals while maintaining a high CMRR

Typical Circuit with Full Offset Adjust

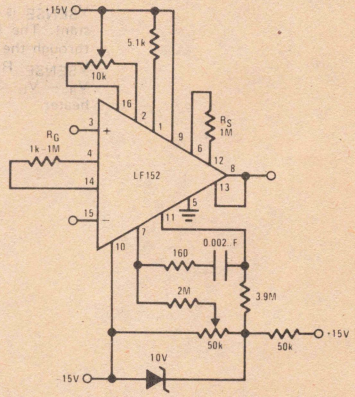

Active Guard Drive

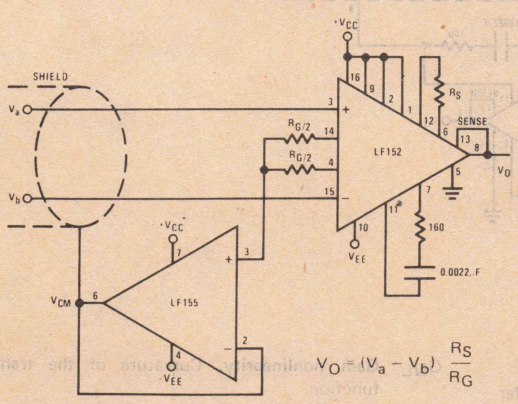

$$V_O = (V_a - V_b)\frac{R_S}{R_G}$$

(This circuit reduces the degradation of CMRR caused by the capacitance of shielded cable.)

Output Current Boost

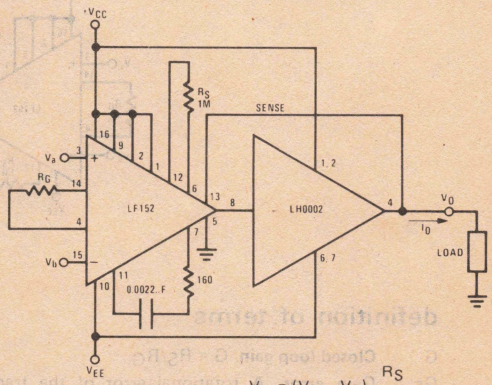

$$V_O = (V_a - V_b)\frac{R_S}{R_G}$$

I_O SOURCE OR SINK ≤ 95 mA

typical applications (con't)

Temperature Control Circuit

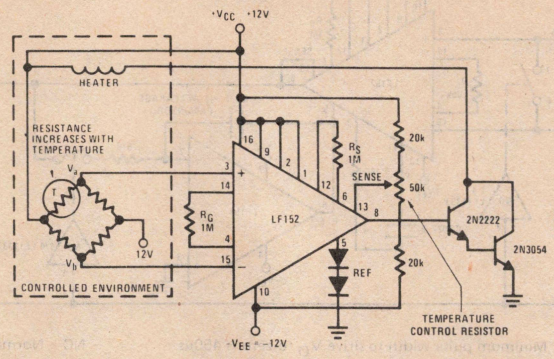

Under balanced conditions, $V_{SENSE} - V_{REF}$ appears across R_S, $V_a - V_b$ appears across R_G and $I_{RG} = I_{RS}$.

$$\frac{V_a - V_b}{R_G} = \frac{V_{SENSE}}{R_S} \text{ or } V_a - V_b = V_{SENSE}\frac{R_G}{R_S}$$

V_{SENSE} is fixed by the temperature control resistor and R_G/R_S is constant. The LF152 is used as a comparator with a feedback loop closed through the heater and the temperature dependent resistor. If $V_a - V_b > V_{SENSE}\ R_G/R_S$. The output goes high turning "ON" the heater. If $V_a - V_b < V_{SENSE}\ R_G/R_S$. The output goes low turning "OFF" the heater.

Alternate Input Offset (V_{IOS}) Adjust Scheme

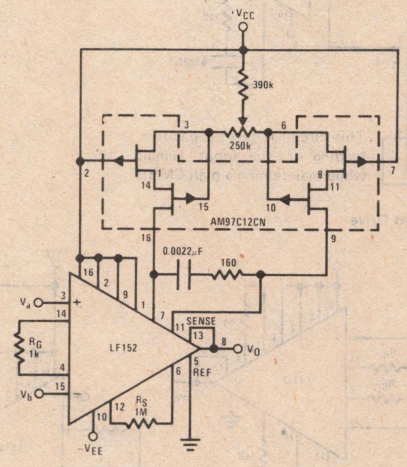

definition of terms

G **Closed loop gain.** $G = R_S/R_G$

G_E **Gain error.** A rotational error of the transfer function about the origin.

G_{NL} **Gain nonlinearity.** Curvature of the transfer function.

V_{OS} **Offset voltage.** Voltage offset of the transfer function at the origin $V_{OS} = V_{IOS}(G) + V_{OOS}$

Section 4

Sample & Hold Amplifiers

4

Section 4. Sample & Hold Amplifiers

Each of these circuits includes input and output buffer amplifiers and analog switches for a complete sample and hold function.

Features	Accuracy (Max)	Drift Rate ($T_A = 25°C$)	Acquisition Time	Aperture Time	Part Number −55°C to 125°C	Part Number −25°C to 85°C	Page Number
Monolithic	±0.02%	30 mV/s (Note 1)	4 μs (Note 1) 20 μs (Note 2)	25 ns	LF198	LF298	4-18
Low Drift	±0.01% ±0.02%	2 mV/s (Note 2)	50 μs (Note 2)	150 ns	LH0023G	LH0023CG	4-4
Medium Speed	±0.1% ±0.3%	25 mV/s (Note 1)	10 μs (Note 1)	20 ns	LH0043G	LH0043CG	4-4
High Speed	±0.2% ±0.3%	30 mV/s (Note 1)	5 μs (Note 1)	25 ns	LH0053G	LH0053CG	4-12

Note 1: $C_S = 1000$ pF.
Note 2: $C_S = 0.01$ μF.

National Semiconductor

Sample and Hold Amplifiers

LH0023/LH0023C, LH0043/LH0043C Sample and Hold Circuits

general description

The LH0023/LH0023C and LH0043/LH0043C are complete sample and hold circuits including input buffer amplifier, FET output amplifier, analog signal sampling gate, TTL compatible logic circuitry and level shifting. They are designed to operate from standard ±15V DC supplies, but provision is made on the LH0023/LH0023C for connection of a separate +5V logic supply in minimum noise applications. The principal difference between the LH0023/LH0023C and the LH0043/LH0043C is a 10:1 trade-off in performance on sample accuracy vs sample acquisition time. Devices are pin compatible except that TTL logic is inverted between the two types.

The LH0023/LH0023C and LH0043/LH0043C are ideally suited for a wide variety of sample and hold applications including data acquisition, analog to digital conversion, synchronous demodulation, and automatic test setup. They offer significant cost and size reduction over equivalent module or discrete designs. Each device is available in a hermetic TO-8 package and are completely specified over both full military and instrument temperature ranges.

The LH0023 and LH0043 are specified for operation over the −55°C to +125°C military temperature range. The LH0023C and LH0043C are specified for operation over the −25°C to +85°C temperature range.

features

LH0023/LH0023C

- Sample accuracy—0.01% max
- Hold drift rate—0.5 mV/sec typ
- Sample acquisition time—100 μs max for 20V
- Aperture time—150 ns typ
- Wide analog range—±10V min
- Logic input—TTL/DTL
- Offset adjustable to zero with single 10k pot
- Output short circuit proof

features

LH0043/LH0043C

- Sample acquisition time—15 μs max for 20V
  4 μs typ for 5V
- Aperture time—20 nS typ
- Hold drift rate—1 mV/sec typ
- Sample accuracy—0.1% max
- Wide analog range—±10V min
- Logic input—TTL/DTL
- Offset adjustable to zero with single 10k pot
- Output short circuit proof

block and connection diagrams

LH0023/LH0023C

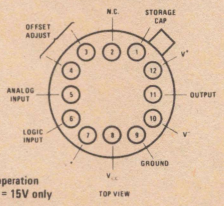

*Tie for operation with V^+ = 15V only

LH0043/LH0043C

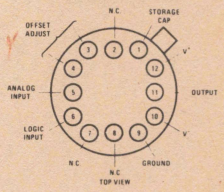

Order Number LH0023G or LH0023CG or LH0043G or LH0043CG
See Package H12B

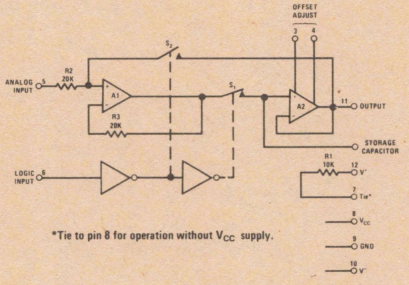

*Tie to pin 8 for operation without V_{CC} supply.

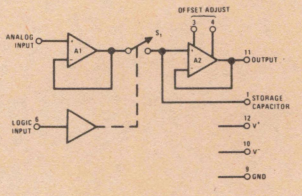

absolute maximum ratings

Supply Voltage (V^+ and V^-)		±20V
Logic Supply Voltage (V_{CC})	LH0023, LH0023C	+7.0V
Logic Input Voltage (V_6)		+5.5V
Analog Input Voltage (V_5)		±15V
Power Dissipation		See graph
Output Short Circuit Duration		Continuous
Operating Temperature Range	LH0023, LH0043	−55°C to +125°C
	LH0023C, LH0043C	−25°C to +85°C
Storage Temperature Range		−65°C to +150°C
Lead Soldering (10 sec)		300°C

electrical characteristics LH0023/LH0023C (Note 1)

PARAMETER	CONDITIONS	LIMITS						UNITS
		LH0023			LH0023C			
		MIN	TYP	MAX	MIN	TYP	MAX	
Sample (Logic "1") Input Voltage	V_{CC} = 4.5V	2.0			2.0			V
Sample (Logic "1") Input Current	V_6 = 2.4V, V_{CC} = 5.5V			5.0			5.0	μA
Hold (Logic "0") Input Voltage	V_{CC} = 4.5V			0.8			0.8	V
Hold (Logic "0") Input Current	V_6 = 0.4V, V_{CC} = 5.5V			0.5			0.5	mA
Analog Input Voltage Range		±10	±11		±10	±11		V
Supply Current – I_{10}	V_5 = 0V, V_6 = 2V, V_{11} = 0V		4.5	6		4.5	6	mA
Supply Current – I_{12}	V_5 = 0V, V_6 = 0.4V, V_{11} = 0V		4.5	6		4.5	6	mA
Supply Current – I_8	V_8 = 5.0V, V_5 = 0		1.0	1.6		1.0	1.6	mA
Sample Accuracy	V_{OUT} = ±10V (Full Scale)		0.002	0.01		0.002	0.02	%
DC Input Resistance	Sample Mode	500	1000		300	1000		kΩ
	Hold Mode	20	25		20	25		kΩ
Input Current – I_5	Sample Mode		0.2	1.0		0.3	1.5	μA
Input Capacitance			3.0			3.0		pF
Leakage Current – pin 1	V_5 = ±10V; V_{11} = ±10V, T_A = 25°C		10.0	200		20.0	500	pA
	V_5 = ±10V; V_{11} = ±10V			2.5			2	nA
Drift Rate	V_{OUT} = ±5V, C_S = 0.01 μF, T_A = 25°C		0.5			0.5		mV/s
Drift Rate	V_{OUT} = ±10V, C_S = 0.01 μF, T_A = 25°C		1.0	20		2.0	50	mV/s
Drift Rate	V_{OUT} = ±10V, C_S = 0.01 μF			0.25			0.2	mV/ms
Aperture Time			150			150		ns
Sample Acquisition Time	ΔV_{OUT} = 20V, C_S = 0.01 μF		50	100		50	100	μs
Output Amplifier Slew Rate		1.5	3.0		1.5	3.0		V/μs
Output Offset Voltage (without null)	$R_S \leq$ 10k, V_5 = 0V, V_6 = 0V			±20			±20	mV
Analog Voltage	$R_L \geq$ 1k, T_A = 25°C	±10	±11		±10	±11		V
Output Range	$R_L \geq$ 2k	±10	±12		±10	±12		V

Note 1: Unless otherwise noted, these specifications apply for V^+ = +15V, V_{CC} = +5V, V^- = −15V, pin 9 grounded, a 0.01μF capacitor connected between pin 1 and ground over the temperature range −55°C to +125°C for the LH0023, and −25°C to +85°C for the LH0023C. All typical values are for T_A = 25°C.

electrical characteristics LH0043/LH0043C: (Note 2)

PARAMETER	CONDITIONS	LIMITS						UNITS
		LH0043			LH0043C			
		MIN	TYP	MAX	MIN	TYP	MAX	
Hold (Logic "1") Input Voltage		2.0			2.0			V
Hold (Logic "1") Input Current	$V_6 = 2.4V$			5.0			5.0	μA
Sample (Logic "0") Input Voltage				0.8			0.8	V
Sample (Logic "0") Input Current	$V_6 = 0.4V$			1.5			1.5	mA
Analog Input Voltage Range		±10	±11		±10	±11		V
Supply Current	$V_5 = 0V, V_6 = 2V, V_{11} = 0V$		20	22		20	22	mA
	$V_5 = 0V, V_6 = 0.4V, V_{11} = 0V$		14	18		14	18	mA
Sample Accuracy	$V_{OUT} = \pm 10V$ (Full Scale)		0.02	0.1		0.02	0.3	%
DC Input Resistance	$T_C = 25°C$	10^{10}	10^{12}		10^{10}	10^{12}		Ω
Input Current – I_5			1.0	5.0		2.0	10.0	nA
Input Capacitance			1.5			1.5		pF
Leakage Current–pin 1	$V_5 = \pm 10V; V_{11} = \pm 10, T_C = 25°C$		10	25		20	50	pA
	$V_5 = \pm 10V; V_{11} = \pm 10V$		10	25		2	5	nA
Drift Rate	$V_{OUT} = \pm 10V, C_S = 0.001\ \mu F, T_C = 25°C$		10	25		20	50	mV/s
Drift Rate	$V_{OUT} = \pm 10V, C_S = 0.001\ \mu F$		10	25		2	5	mV/ms
Drift Rate	$V_{OUT} = \pm 10V, C_S = 0.01\ \mu F, T_C = 25°C$		1	2.5		2	5	mV/s
Drift Rate	$V_{OUT} = \pm 10V, C_S = 0.01\ \mu F$		1	2.5		0.2	0.5	mV/ms
Aperture Time			20	60		20	60	ns
Sample Acquisition Time	$\Delta V_{OUT} = 20V, C_S = 0.001\ \mu F$		10	15		10	15	μs
	$\Delta V_{OUT} = 20V, C_S = 0.01\ \mu F$		30	50		30	50	μs
	$\Delta V_{OUT} = 5V, C_S = 0.001\ \mu F$		4			4		μs
Output Amplifier Slew Rate	$V_{OUT} = 5V, C_S = 0.001\ \mu F$	1.5	3.0		1.5	3.0		V/μs
Output Offset Voltage (without null)	$R_S \leq 10k, V_5 = 0V, V_6 = 0V$			±40			±40	mV
Analog Voltage Output Range	$R_L \geq 1k, T_A = 25°C$	±10	±11		±10	±11		V
	$R_L \geq 2k$	±10	±12		±10	±12		V

Note 2: Unless otherwise noted, these specifications apply for $V^+ = +15V$, $V^- = -15V$, pin 9 grounded, a 5000 pF capacitor connected between pin 1 and ground over the temperature range −55°C to +125°C for the LH0043, and −25°C to +85°C for the LH0043C. All typical values are for $T_C = 25°C$.

typical performance characteristics

Power Dissipation

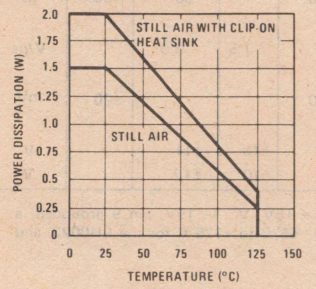

Sample Acquisition Time—LH0043

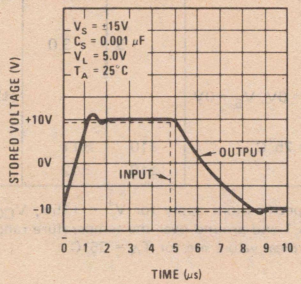

Sample Acquisition Time—LH0043

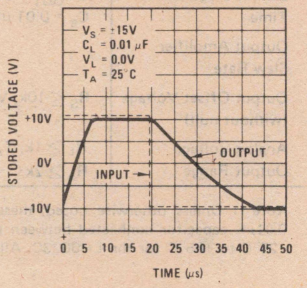

typical performance characteristics (con't)

Sample Acquisition Time—LH0023

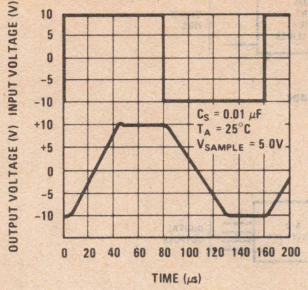

Pin 1 Leakage Current vs Output Voltage

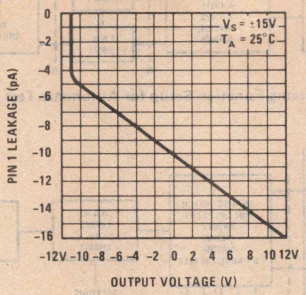

Pin 1 Leakage Current vs Temperature

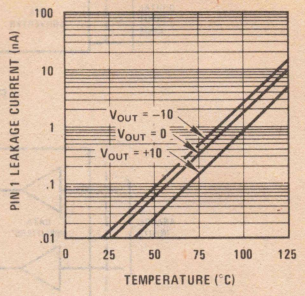

Output Current Limiting

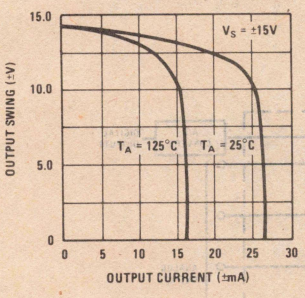

Drift vs Capacitance (LH0023)

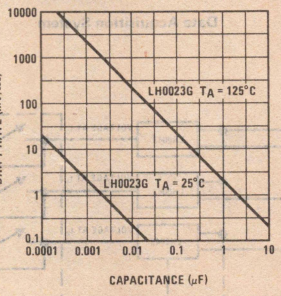

Drift vs Capacitance (LH0043)

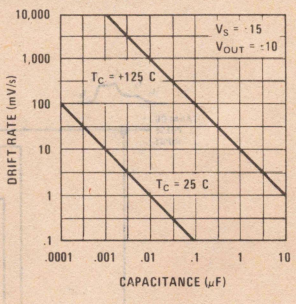

(LH0023)

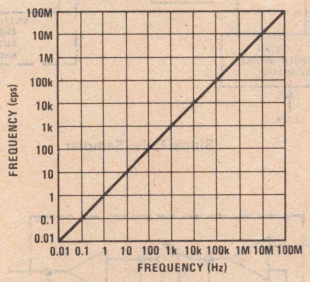

typical applications

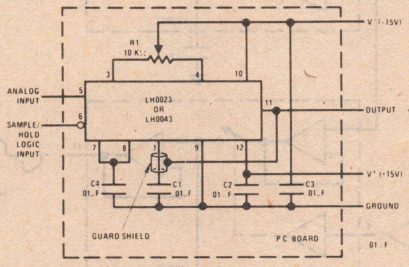

Note 1: C1 is polystyrene.
Note 2: C2, C3, C4 are cermic disc.
Note 3: Jumper 7–8 and C4 not required for LH0043.
Note 4: R1 optional if zero trim is required.

How to Build a Sample and Hold Module

typical applications (con't)

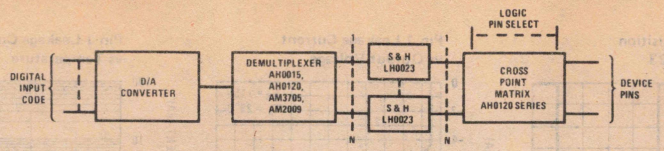

Forcing Function Setup for Automatic Test Gear

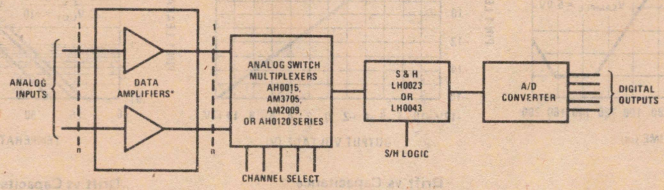

*See op amp selection guide for details. Most popular types include LH0052, LM108, LM112, LH0044, LH0036, and LH0038.

Data Acquisition System

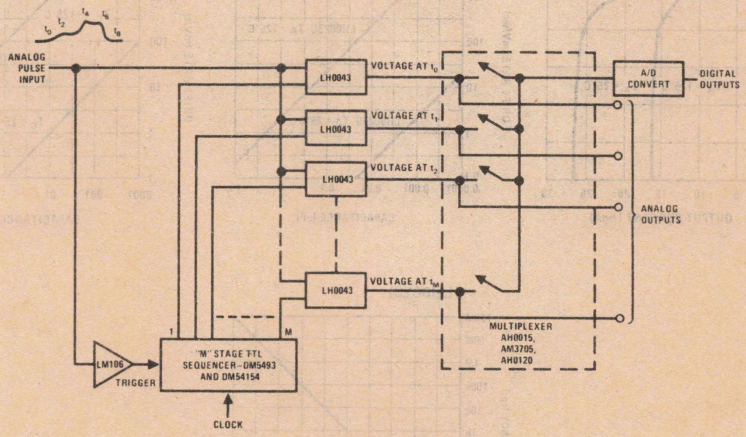

Single Pulse Sampler

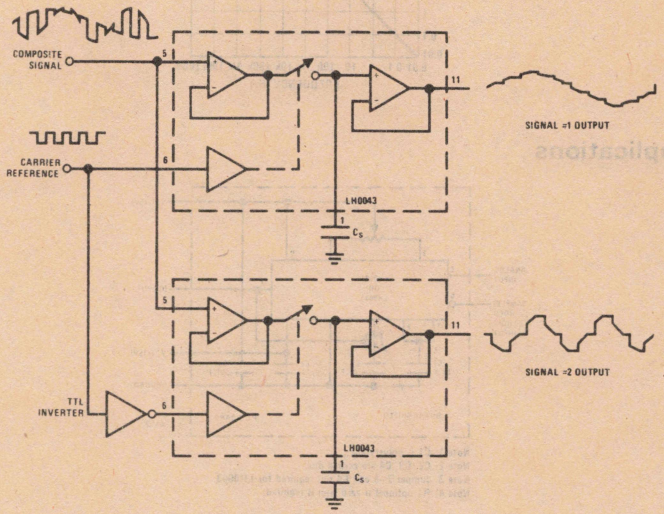

Two Channel Double Sideband Demodulator

schematic diagrams

LH0043/LH0043C

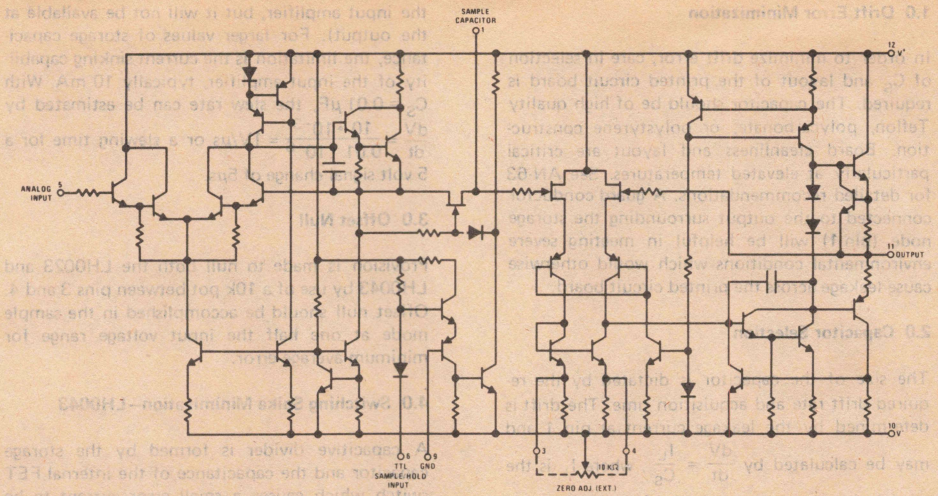

LH0023/LH0023C

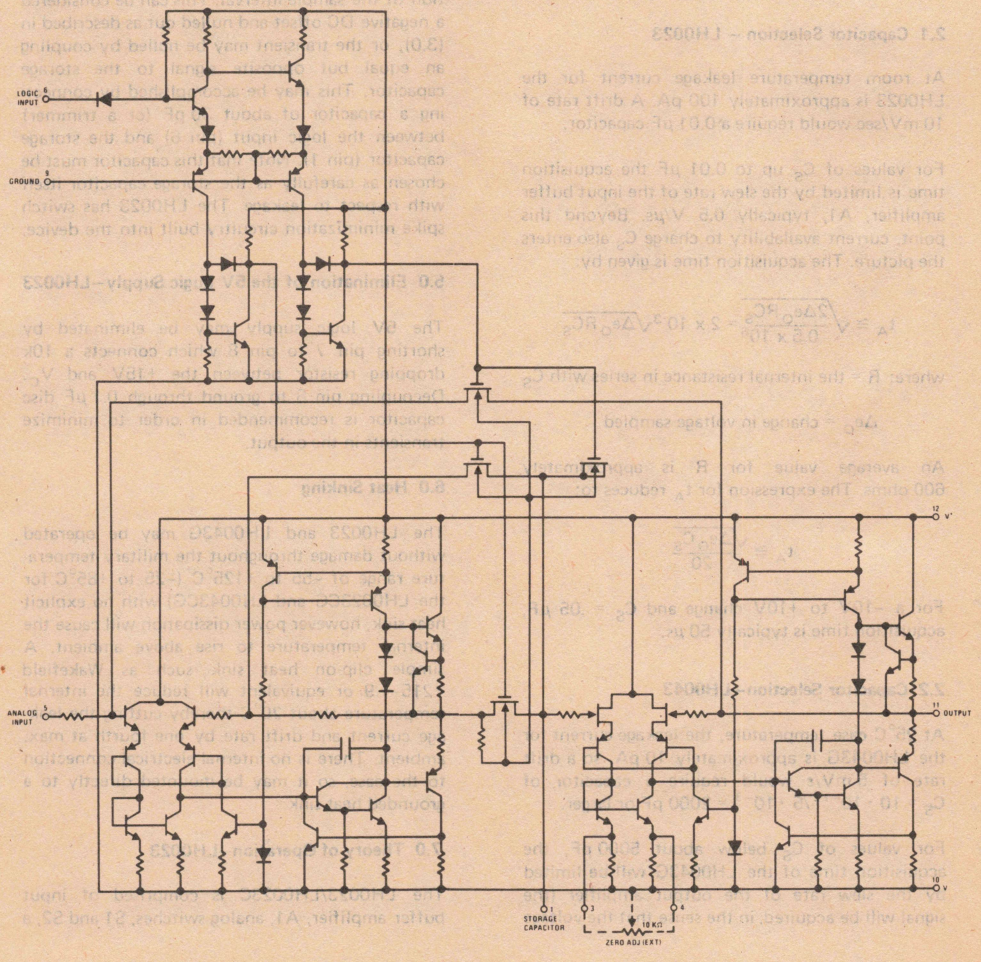

applications information

1.0 Drift Error Minimization

In order to minimize drift error, care in selection of C_S and layout of the printed circuit board is required. The capacitor should be of high quality Teflon, polycarbonate, or polystyrene construction. Board cleanliness and layout are critical particularly at elevated temperatures. See AN-63 for detailed recommendations. A guard conductor connected to the output surrounding the storage node (pin 1) will be helpful in meeting severe environmental conditions which would otherwise cause leakage across the printed circuit board.

2.0 Capacitor Selection

The size of the capacitor is dictated by the required drift rate and acquisition time. The drift is determined by the leakage current at pin 1 and may be calculated by $\frac{dV}{dt} = \frac{I_L}{C_S}$, where I_L is the total leakage current at pin 1 of the device, and C_S is the value of the storage capacitor.

2.1 Capacitor Selection – LH0023

At room temperature leakage current for the LH0023 is approximately 100 pA. A drift rate of 10 mV/sec would require a 0.01 μF capacitor.

For values of C_S up to 0.01 μF the acquisition time is limited by the slew rate of the input buffer amplifier, A1, typically 0.5 V/μs. Beyond this point, current availability to charge C_S also enters the picture. The acquisition time is given by:

$$t_A \cong \sqrt{\frac{2\Delta e_O RC_S}{0.5 \times 10^6}} = 2 \times 10^{-3}\sqrt{\Delta e_O RC_S}$$

where: R = the internal resistance in series with C_S

Δe_O = change in voltage sampled

An average value for R is approximately 600 ohms. The expression for t_A reduces to:

$$t_A \cong \sqrt{\frac{\Delta e_O C_S}{20}}$$

For a −10V to +10V change and C_S = .05 μF, acquisition time is typically 50 μs.

2.2 Capacitor Selection–LH0043

At 25°C case temperature, the leakage current for the LH0043G is approximately 10 pA, so a drift rate of 5 mV/s would require a capacitor of $C_S = 10 \cdot 10^{-12}/5 \cdot 10^{-3}$ = 2000 pF or larger.

For values of C_S below about 5000 pF, the acquisition time of the LH0043G will be limited by the slew rate of the output amplifier (the signal will be acquired, in the sense that the voltage will be stored on the capacitor, in much less time as dictated by the slew rate and current capacity of the input amplifier, but it will not be available at the output). For larger values of storage capacitance, the limitation is the current sinking capability of the input amplifier, typically 10 mA. With C_S = 0.01 μF, the slew rate can be estimated by $\frac{dV}{dt} = \frac{10 \cdot 10^{-3}}{0.01 \cdot 10^{-6}}$ = 1V/μs or a slewing time for a 5 volt signal change of 5μs.

3.0 Offset Null

Provision is made to null both the LH0023 and LH0043 by use of a 10k pot between pins 3 and 4. Offset null should be accomplished in the sample mode at one half the input voltage range for minimum average error.

4.0 Switching Spike Minimization–LH0043

A capacitive divider is formed by the storage capacitor and the capacitance of the internal FET switch which causes a small error current to be injected into the storage capacitor at the termination of the sample interval. This can be considered a negative DC offset and nulled out as described in (3.0), or the transient may be nulled by coupling an equal but opposite signal to the storage capacitor. This may be accomplished by connecting a capacitor of about 30 pF (or a trimmer) between the logic input (pin 6) and the storage capacitor (pin 1). Note that this capacitor must be chosen as carefully as the storage capacitor itself with respect to leakage. The LH0023 has switch spike minimization circuitry built into the device.

5.0 Elimination of the 5V Logic Supply–LH0023

The 5V logic supply may be eliminated by shorting pin 7 to pin 8 which connects a 10k dropping resistor between the +15V and V_C. Decoupling pin 8 to ground through 0.1 μF disc capacitor is recommended in order to minimize transients in the output.

6.0 Heat Sinking

The LH0023 and LH0043G may be operated without damage throughout the military temperature range of −55 to +125°C (−25 to +85°C for the LH0023CG and LH0043CG) with no explicit heat sink, however power dissipation will cause the internal temperature to rise above ambient. A simple clip-on heat sink such as Wakefield #215–1.9 or equivalent will reduce the internal temperature about 20°C thereby cutting the leakage current and drift rate by one fourth at max. ambient. There is no internal electrical connection to the case, so it may be mounted directly to a grounded heat sink.

7.0 Theory of Operation–LH0023

The LH0023/LH0023C is comprised of input buffer amplifier, A1, analog switches, S1 and S2, a

applications information (con't)

TTL to MOS level translator, and output buffer amplifier, A2. In the "sample" mode, the logic input is raised to logic "1" ($V_6 \leq 2.0V$) which closes S1 and opens S2. Storage capacitor, C_S, is charged to the input voltage through S1 and the output slews to the input voltage. In the "hold" mode, the logic input is lowered to logic "0" ($V_6 \leq 0.8V$) opening S1 and closing S2. C_S retains the sample voltage which is applied to the output via A2. Since S1 is open, the input signal is overridden, and leakage across the MOS switch is therefore minimized. With S1 open, drift is primarily determined by input bias current of A2, typically 100 pA at 25°C.

7.1 Theory of Operation—LH0043

The LH0043/LH0043C is comprised of input buffer amplifier A1, FET switch S1 operated by a TTL compatible level translator, and output buffer amplifier A2. To enter the "sample" mode, the logic input is taken to the TTL logic "0" state (V_6 = 0.8V) which commands the switch S1 closed and allows A1 to make the storage capacitor voltage equal to the analog input voltage. In the "hold" mode (V_6 = 2.0V), S1 is opened isolating the storage capacitor from the input and leaving it charged to a voltage equal to the last analog input voltage before entering the hold mode. The storage capacitor voltage is brought to the output by low leakage amplifier A2.

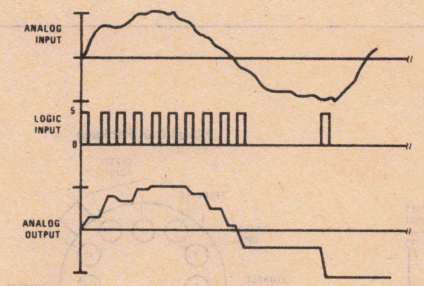

8.0 Definitions

V_5: The voltage at pin 5, e.g., the analog input voltage.

V_6: The voltage at pin 6, e.g., the logic control input signal.

V_{11}: The voltage at pin 11, e.g., the output signal.

T_A: The temperature of the ambient air.

T_C: The temperature of the device case at the center of the bottom of the header.

Acquisition Time:
The time required for the output (pin 11) to settle within the rated accuracy after a specified input change is applied to the input (pin 5) with the logic input (pin 6) in the low state.

Aperture Time:
The time indeterminacy when switching from sample mode to hold including the delay from the time the mode control signal (pin 6) passes through its threshold (1.4 volts) to the time the circuit actually enters the hold mode.

Output Offset Voltage:
The voltage at the output terminal (pin 11) with the analog input (pin 5) at ground and logic input (pin 6) in the "sample" mode. This will always be adjustable to zero using a 10k pot between pins 3 and 4 with the wiper arm returned to V^-.

National Semiconductor

Sample and Hold Amplifiers

LH0053/LH0053C High Speed Sample and Hold Amplifier

general description

The LH0053/LH0053C is a high speed sample and hold circuit capable of acquiring a 20V step signal in under 5.0μs.

The device is ideally suited for a variety of high speed data acquisition applications including analog buffer memories for A to D conversion and synchronous demodulation.

An auxiliary switch within the device extends its usefulness in applications such as preset integrators.

features

- Sample acquisition time 10μs max for 20V signal
- FET switch for preset or reset function
- Sample accuracy null
- Offset adjust to 0V
- DTL/TTL compatible FET gate
- Single storage capacitor

schematic and connection diagrams

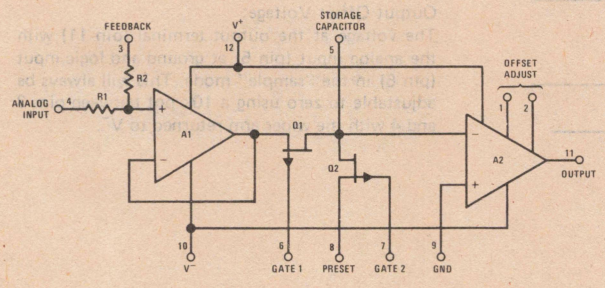

Metal Can Package

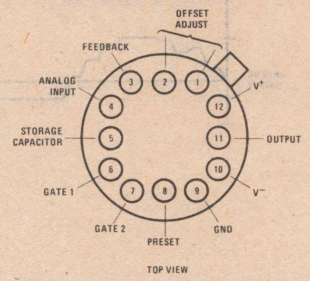

Order Number LH0053G or LH0053CG
See Package H12B

ac test circuit

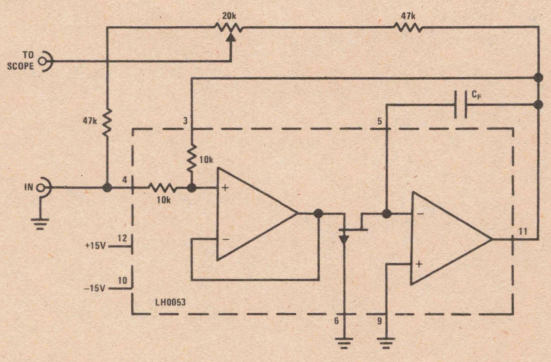

Acquisition Time Test Circuit

absolute maximum ratings

Supply Voltage (V^+ and V^-)	±18V
Gate Input Voltage (V_6 and V_7)	±20V
Analog Input Voltage (V_4)	±15V
Input Current (I_8 and I_5)	±10 mA
Power Dissipation	1.5W
Output Short Circuit Duration	Continuous
Operating Temperature Range	
LH0053	−55°C to +125°C
LH0053C	−25°C to +85°C
Storage Temperature Range	−65°C to +150°C
Lead Temperature (Soldering, 10 seconds)	300°C

electrical characteristics (Note 1)

PARAMETER	CONDITIONS	LIMITS						UNITS
		LH0053			LH0053C			
		MIN	TYP	MAX	MIN	TYP	MAX	
Sample (Gate "0") Input Voltage				0.5			0.5	V
Sample (Gate "0") Input Current	V_6 = 0.5V, T_A = 25°C V_6 = 0.5			−5.0 −100			−5.0 −100	μA μA
Hold (Gate "1") Input Voltage		4.5			4.5			V
Hold (Gate "1") Input Current	V_6 = 4.5V, T_A = 25°C V_6 = 4.5V			1.0 1.0			1.0 1.0	nA μA
Analog Input Voltage Range		±10	±11		±10	±11		V
Supply Current	V_4 = 0V V_6 = 0.5V		13	18		13	18	mA
Input Bias Current (I_4)	V_4 = 0V, T_A = 25°C		120	250		150	500	nA
Input Resistance		9.0	10	11	9.0	10	11	kΩ
Analog Output Voltage Range	R_L = 2.0k	±10	±12		±10	±12		V
Output Offset Voltage	V_4 = 0V, V_6 = 0.5V, T_A = 25°C V_4 = 0V, V_6 = 0.5V		5.0	7.0 10		5.0	10 15	mV mV
Sample Accuracy (Note 2)	V_4 = ±10V, V_6 = 0.5V, T_A = 25°C		0.1	0.2		0.1	0.3	%
Aperture Time	ΔV_6 = 4.5V, T_A = 25°C		10	25		10	25	ns
Sample Acquisition Time	V_4 = ±10V, T_A = 25°C, C_F = 1000 pF, V_6 = 0V		5.0	10		8.0	15	μs
Sample Acquisition Time	V_4 = ±10V, T_A = 25°C, C_F = 100 pF, V_6 = 0V		4.0			4.0		μs
Output Slew Rate	ΔV_{IN} = ±10V, T_A = 25°C, C_F = 100 pF, V_6 = 0V		20			20		V/μs
Large Signal Bandwidth	V_4 = ±10V, T_A = 25°C, C_F = 1000 pF		200			200		kHz
Leakage Current (Pin 5)	V_4 = ±10V, T_A = 25°C V_4 = ±10V		6.0	30 30		10	50 3.0	pA nA
Drift Rate	V_4 = ±10V, T_A = 25°C, C_F = 1000 pF		6.0	30		10	50	mV/s
Drift Rate	V_4 = ±10V, C_F = 1000 pF			30			3.0	V/s
Q2 Switch ON Resistance	V_7 = 0.5V, I_8 = 1.0 mA, T_A = 25°C		100	300		100	300	Ω

Note 1: Unless otherwise noted, these specifications apply for V_S = ±15V, pin 9 grounded, a 1000 pF capacitor between pin 5 and pin 11, pin 3 shorted to pin 11, over the temperature range −55°C to +125°C for the LH0053 and −25°C to +85°C for the LH0053C. All typical values are for T_A = 25°C.

Note 2: Sample accuracy may be nulled by inserting a potentiometer in the feedback loop. This compensates for source impedance and feedback resistor tolerances.

typical performance characteristics

Power Dissipation

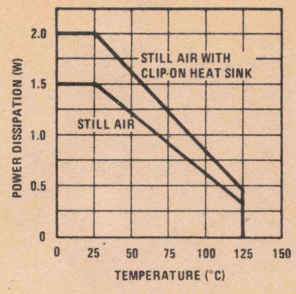

Supply Current vs Temperature

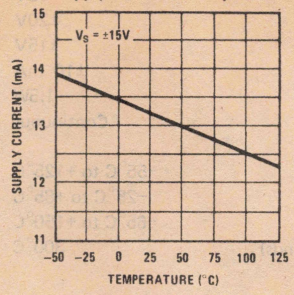

Output Current Limiting

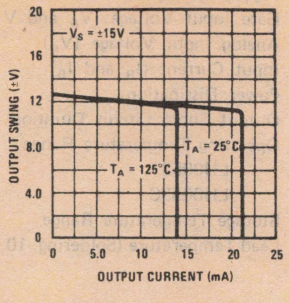

Input Bias Current

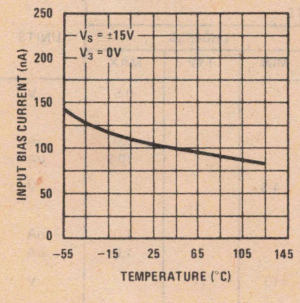

Drift

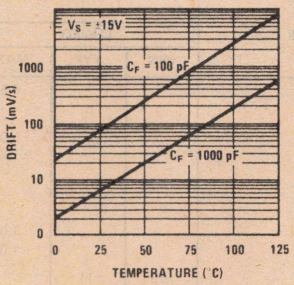

Leakage Current at Pin 5

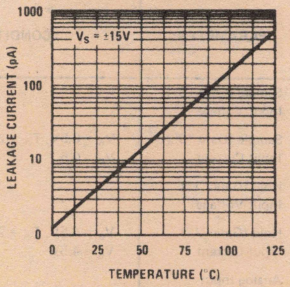

Sample Acquisition Time

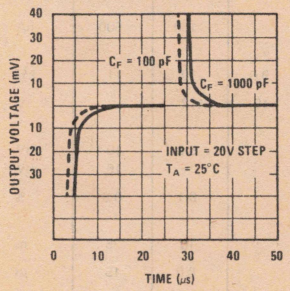

Output Slew Rate

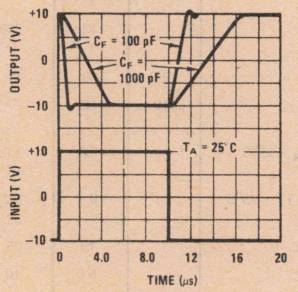

Acquisition Time vs Temperature

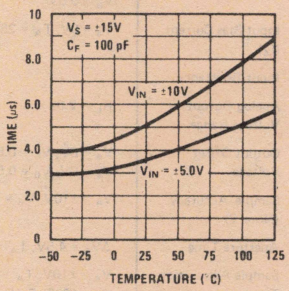

typical applications

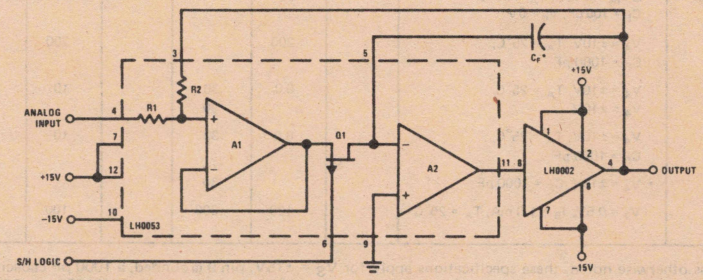

*Polystyrene construction.

Increasing Output Drive Capability

typical applications (con't)

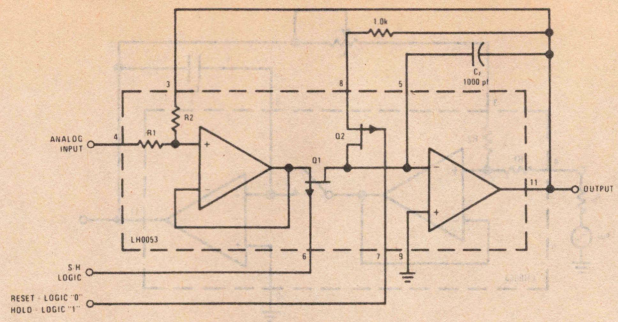

Sample and Hold with Reset

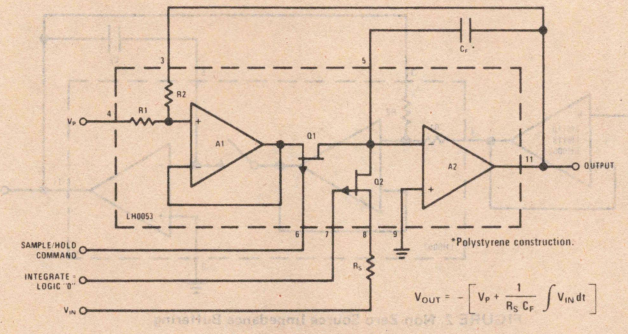

$$V_{OUT} = -\left[V_P + \frac{1}{R_S C_F}\int V_{IN}\,dt\right]$$

Preset Integrator

applications information

SOURCE IMPEDANCE COMPENSATION

The gain accuracy (linearity) of the LH0053/LH0053C is set by two internal precision resistors. Circuit applications in which the source impedance is non-zero will result in a closed loop gain error, e.g. if R_S = 10Ω, a gain error of 0.1% results. Figure 1 and 2 show methods for accommodating non-zero source impedance.

DRIFT ERROR MINIMIZATION

In order to minimize drift error, care in selection C_F and layout of the printed circuit board is required. The capacitor should be of high quality teflon, polycarbonate or polystyrene construction. Board layout and clean lines are critical particularly at elevated temperature.

A ground guard (shield) surrounding pin 5 will minimize leakage currents to and from the summing junction, arising from extraneous signals. See AN-63 for detailed recommendations.

CAPACITOR SELECTION

The size of the capacitor is determined by the required drift rate usually at the expense of acquisition time.

The drift is dictated by leakage current at pin 5 and is given by:

$$\frac{dv}{dt} = \frac{I_L}{C_F}$$

Where I_L is the leakage current at pin 5 and C_F is the value of the capacitance. The room temperature leakage of the LH0053 is typical 6.0 pA, and a 1000 pF capacitor will yield a drift rate of 6.0 mV per second.

For values of C_F below 1000 pF acquisition for the LH0053 is primarily governed by the slew rate of the input amplifier (20 V/μs) and the setting time of output amplifier (≅ 1.0μs). For values above C_F = 1000 pF, acquisition time is given by:

$$t_a = \frac{C_F\,\Delta V}{I_{DSS}} + t_{S2}$$

Where:

C_F = The value of the capacitor

ΔV = The magnitude of the input step; e. g. 20V

I_{DSS} = The ON current of switch Q1 ≅ 5.0 mA

t_{S2} = The setting time of output amplifier ≅ 1.0μs

applications information (con't)

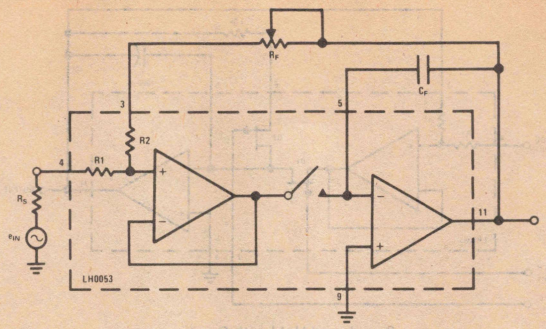

FIGURE 1. Non-Zero Source Impedance Compensation

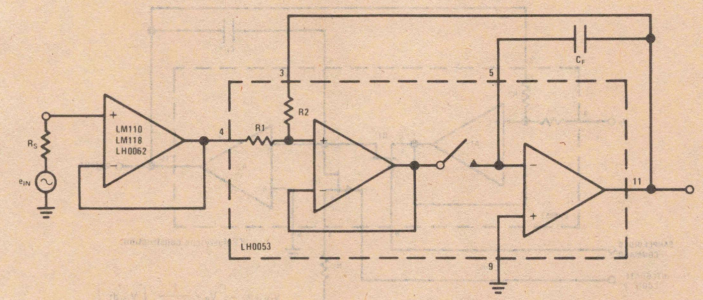

FIGURE 2. Non-Zero Source Impedance Buffering

GATE INPUT CONSIDERATIONS

5.0V TTL Applications

The LH0053 Gate inputs Gate 1 (pin 6) and Gate 2 (pin 7) will interface directly with 5.0V TTL. However, TTL gates typically pull up to 2.5V in the logic "1" state. It is therefore advisable to use a 10k pull-up resistor between the 5.0V, V_{CC}, and the output of the gate as shown in Figure 3.

To obtain the highest speed and fastest acquisition time, the gate drive shown in Figure 6 is reccommended.

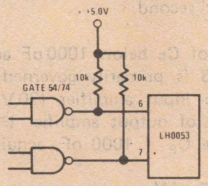

FIGURE 3. TTL Logic Compatibility

CMOS Applications

The LH0053 gate inputs may be interfaced directly with 74C, CMOS operating off of V_{CC}'s from 5.0V to 15V. However transient currents of several milliamps can flow on the rising and falling edges of the input signal. It is, therefore, advisable to parallel the outputs of two 54C/74C gates as shown in Figure 4.

It should be noted that leakage at pin 5 in the hold mode will be increased by a factor of 2 to 3 when operating into 15V logic levels.

Unused Switch, Q2

In applications when switch Q2 is not used the logic input (pin 7) should be returned to +5.0V (or +15V for HTL applications) through a 10kΩ resistor. Analog Input, preset (pin 8) should be grounded.

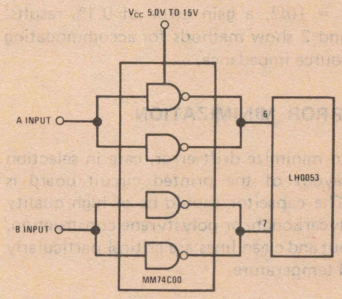

FIGURE 4. CMOS Logic Compatibility

HEAT SINKING

The LH0053 may be operated over the military temperature range, −55°C to +125°C, without incurring damage to the device. However, a clip on heat sink such as the Wakefield 215 Series or Thermolloy 2240 will reduce the internal temperature rise by about 20°C. The result is a two-fold improvement in drift rate at temperature.

applications information (con't)

Since the case of the device is electrically isolated from the circuit, the LH0053 may be mounted directly to a grounded heat sink.

POWER SUPPLY DECOUPLING

Amplifiers A1 and A2 within the LH0053 are very wide band devices and are sensitive to power supply inductance. It is advisable to by-pase V^+ (pin 12) and V^- (pin 10) to ground with 0.1μF disc capacitors in order to prevent oscillation. Should this procedure prove inadequate, the disc capacitors should be paralled with 4.7μF solid tantalum electrolytic capacitors.

DC OFFSET ADJUST

Output offset error may be adjusted to zero using the circuit shown in Figure 5. Offset null should be accomplished in the sample mode ($V_6 \leq 0.5V$) and analog input (pin 4) equal to zero volts.

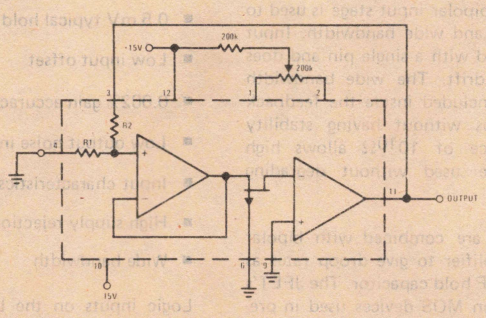

FIGURE 5. Offset Null Circuit

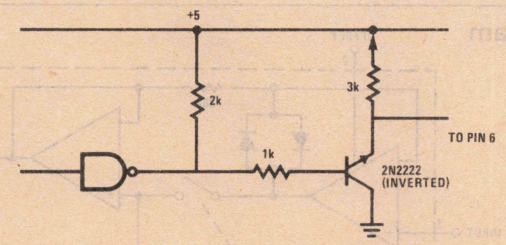

FIGURE 6. High Speed Gate Drive Circuit

definition of terms

Voltage, V_4: The voltage at pin 4, i.e., the analog input voltage.

Voltage, V_6: The voltage at pin 6, i.e., the logic control signal. A logic "1" input, $V_6 \leq 4.5V$, places the LH0053 in the HOLD mode; a logic "0" input ($V_6 \leq 0.5V$) places the device in sample mode.

Acquisition Time: The time required for the output (pin 11) to settle within the rated accuracy after a specified input change is applied to Analog Input 1 (pin 4) with logic input, Gate 1, (pin 6) in the logic "0" state.

Aperture Time: The time indeterminacy when switching from the "sample" mode to the HOLD mode measured from time the logic input passes through it's threshold (2.0V) to the time the device actually enters the HOLD mode.

Sample Accuracy: Difference between input voltage and output voltage while in the sample mode, expressed as a percent of input voltage.

National Semiconductor

Sample and Hold Amplifiers

LF198/LF298/LF398 Monolithic Sample and Hold Circuits

general description

The LF198/LF298/LF398 are monolithic sample and hold circuits which utilize BI-FET technology to obtain ultra-high dc accuracy with fast acquisition of signal and low droop rate. Operating as a unity gain follower, dc gain accuracy is 0.002% typical and acquisition time is as low as 6μs to 0.01%. A bipolar input stage is used to achieve low offset voltage and wide bandwidth. Input offset adjust is accomplished with a single pin and does not degrade input offset drift. The wide bandwidth allows the LF198 to be included inside the feedback loop of 1 MHz op amps without having stability problems. Input impedance of $10^{10}\Omega$ allows high source impedances to be used without degrading accuracy.

P-channel junction FET's are combined with bipolar devices in the output amplifier to give droop rates as low as 5 mV/min with a 1μF hold capacitor. The JFET's have much lower noise than MOS devices used in previous designs and do not exhibit high temperature instabilities. The overall design guarantees no feedthrough from input to output in the hold mode even for input signals equal to the supply voltages.

features

- Operates from ±5V to ±18V supplies
- Less than 10μs acquisition time
- TTL, PMOS, CMOS compatible logic input
- 0.5 mV typical hold step at C_h = 0.01μF
- Low input offset
- 0.002% gain accuracy
- Low output noise in hold mode
- Input characteristics do not change during hold mode
- High supply rejection ratio in sample or hold
- Wide bandwidth

Logic inputs on the LF198 are fully differential with low input current, allowing direct connection to TTL, PMOS, and CMOS. Differential threshold is 1.4V. The LF198 will operate from ±5V to ±18V supplies. It is available in an 8-lead TO-5 package.

functional diagram

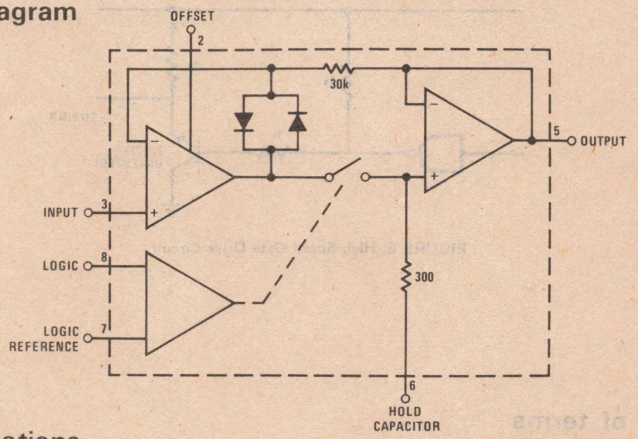

typical applications

Typical Connection

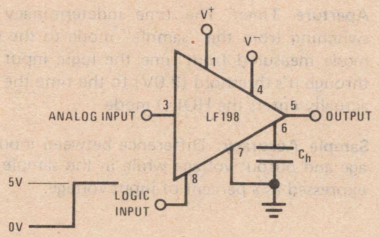

Acquisition Time

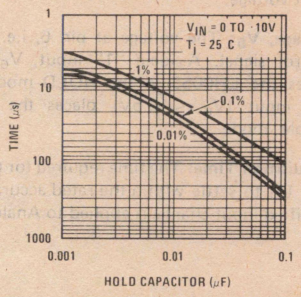

absolute maximum ratings

Supply Voltage	±18V
Power Dissipation (Package Limitation) (Note 1)	500 mW
Operating Ambient Temperature Range	
LF198	−55°C to +125°C
LF298	−25°C to +85°C
LF398	0°C to +70°C
Storage Temperature Range	−65°C to +150°C
Input Voltage	Equal to Supply Voltage
Logic To Logic Reference Differential Voltage (Note 2)	+7V, −30V
Output Short Circuit Duration	Indefinite
Hold Capacitor Short Circuit Duration	10 sec
Lead Temperature (Soldering, 10 seconds)	300°C

electrical characteristics (Note 3)

PARAMETER	CONDITIONS	LF198/LF298			LF398			UNITS
		MIN	TYP	MAX	MIN	TYP	MAX	
Input Offset Voltage, (Note 6)	$T_j = 25°C$		1	3		2	7	mV
	Full Temperature Range			5			10	mV
Input Bias Current, (Note 6)	$T_j = 25°C$		5	25		10	50	nA
	Full Temperature Range			75			100	nA
Input Impedance	$T_j = 25°C$		10^{10}			10^{10}		Ω
Gain Error	$T_j = 25°C$, $R_L = 10k$		0.002	0.005		0.004	0.01	%
	Full Temperature Range			0.02			0.02	%
Feedthrough Attenuation Ratio at 1 kHz	$T_j = 25°C$, $C_h = 0.01\mu F$	86	96		80	90		dB
Output Impedance	$T_j = 25°C$, "HOLD" mode		0.5	2		0.5	4	Ω
	Full Temperature Range			4			6	Ω
"HOLD" Step, (Note 4)	$T_j = 25°C$, $C_h = 0.01\mu F$, $V_{OUT} = 0$		0.5	2.0		1.0	2.5	mV
Supply Current, (Note 6)	$T_j \geq 25°C$		4.5	5.5		4.5	6.5	mA
Logic and Logic Reference Input Current	$T_j = 25°C$		2	10		2	10	μA
Leakage Current into Hold Capacitor (Note 6)	$T_j = 25°C$, (Note 5) Hold Mode		30	100		30	200	pA
Acquisition Time to 0.1%	$\Delta V_{OUT} = 10V$, $C_h = 1000$ pF		4			4		μs
	$C_h = 0.01\mu F$		20			20		μs
Hold Capacitor Charging Current	$V_{IN} - V_{OUT} = 2V$		5			5		mA
Supply Voltage Rejection Ratio	$V_{OUT} = 0$	80	110		80	110		dB
Differential Logic Threshold	$T_j = 25°C$	0.8	1.4	2.4	0.8	1.4	2.4	V

Note 1: The maximum junction temperature of the LF198 is 150°C, for the LF298, 115°C, and for the LF398, 100°C. When operating at elevated ambient temperature, the TO-5 package must be derated based on a thermal resistance (Θ_{jA}) of 150°C/W.

Note 2: Although the differential voltage may not exceed the limits given, the common-mode voltage on the logic pins may be equal to the supply voltages without causing damage to the circuit. For proper logic operation, however, one of the logic pins must always be at least 2V below the positive supply and 3V above the negative supply.

Note 3: Unless otherwise specified, the following conditions apply. Unit is in "sample" mode, $V_S = \pm 15V$, $T_j = 25°C$, $-11.5V \leq V_{IN} \leq +11.5V$, $C_h = 0.01\mu F$, and $R_L = 10\ k\Omega$. Logic reference voltage = 0V and logic voltage = 2.5V.

Note 4: Hold step is sensitive to stray capacitive coupling between input logic signals and the hold capacitor. 1 pF, for instance, will create an additional 0.5 mV step with a 5V logic swing and a 0.01μF hold capacitor. Magnitude of the hold step is inversely proportional to hold capacitor value.

Note 5: Leakage current is measured at a *junction* temperature of 25°C. The effects of junction temperature rise due to power dissipation or elevated ambient can be calculated by doubling the 25°C value for each 11°C increase in chip temperature. Leakage is guaranteed over full input signal range.

Note 6: These parameters guaranteed over a supply voltage range of ±5 to ±18V.

typical performance characteristics

Aperture Time*

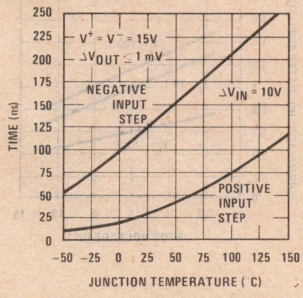

*See definition

Capacitor Hysteresis

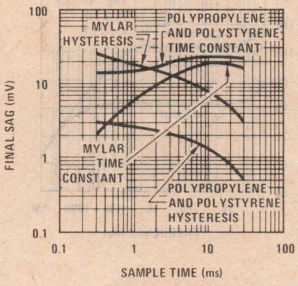

Dynamic Sampling Error

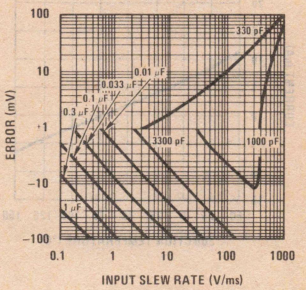

typical performance characteristics (con't)

Output Droop Rate

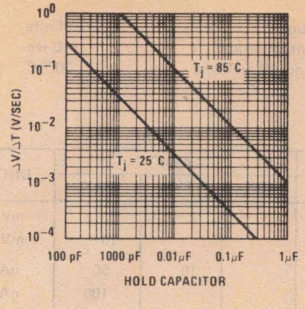

Hold Step

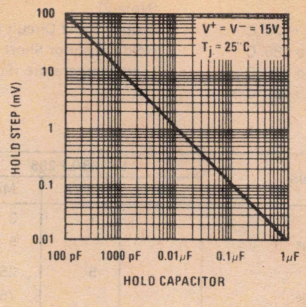

"Hold" Settling Time*

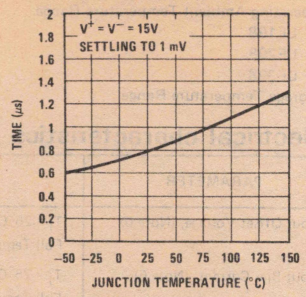

*See definition

Leakage Current into Hold Capacitor

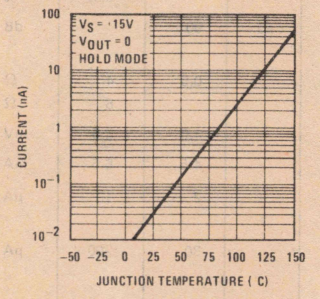

Phase and Gain (Input to Output, Small Signal)

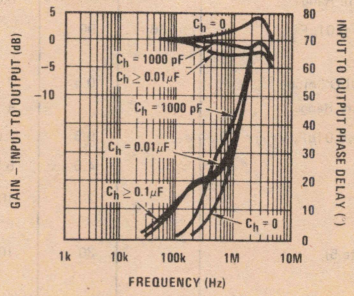

Gain Error

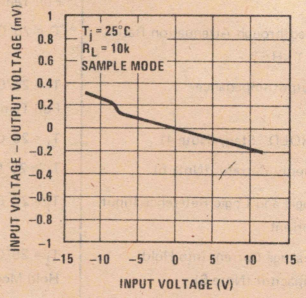

Power Supply Rejection

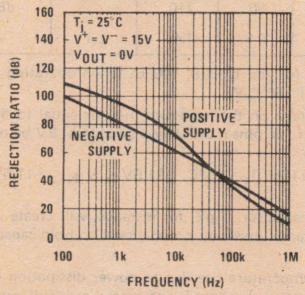

Output Short Circuit Current

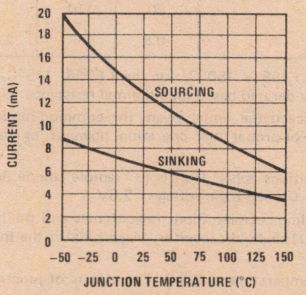

Output Noise

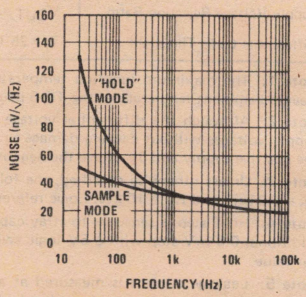

Input Bias Current

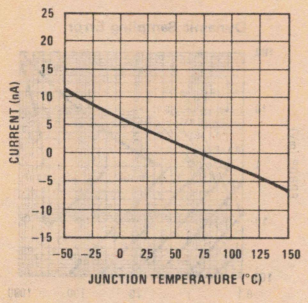

Feedthrough Rejection Ratio (Hold Mode)

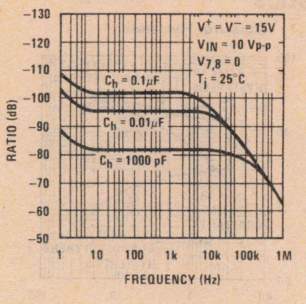

Hold Step vs Input Voltage

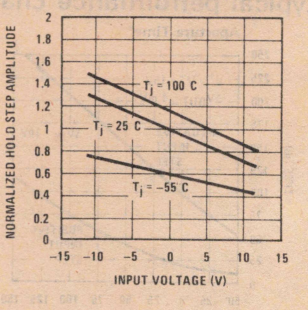

application hints

Hold Capacitor

Hold step, acquisition time, and droop rate are the major trade-offs in the selection of a hold capacitor value. Size and cost may also become important for larger values. Use of the curves included with this data sheet should be helpful in selecting a reasonable value of capacitance. Keep in mind that for fast repetition rates or tracking fast signals, the capacitor drive currents may cause a significant temperature rise in the LF198.

A significant source of error in an accurate sample and hold circuit is dielectric absorption in the hold capacitor. A mylar cap, for instance, may "sag back" up to 0.2% after a quick change in voltage. A long "soak" time is required before the circuit can be put back into the hold mode with this type of capacitor. Dielectrics with very low hysteresis are polystyrene, polypropylene, and Teflon. Other types such as mica and polycarbonate are not nearly as good. Ceramic is unusable with > 1% hysteresis. The advantage of polypropylene over polystyrene is that it extends the maximum ambient temperature from 85°C to 100°C. For more exact data, see the curve labeled dielectric absorption error vs sample time. The hysteresis numbers on the curve are final values, taken after full relaxation. The hysteresis error can be significantly reduced if the output of the LF198 is digitized quickly after the hold mode is initiated. The hysteresis relaxation time constant in polypropylene, for instance, is 10–50 ms. If A-to-D conversion can be made within 1 ms, hysteresis error will be reduced by a factor of ten.

DC and AC Zeroing

DC zeroing is accomplished by connecting the offset adjust pin to the wiper of a 1 kΩ potentiometer which has one end tied to V^+ and the other end tied through a resistor to ground. The resistor should be selected to give ≈0.6 mA through the 1k potentiometer.

AC zeroing (hold step zeroing) can be obtained by adding an inverter with the adjustment pot tied input to output. A 10 pF capacitor from the wiper to the hold capacitor will give ±4 mV hold step adjustment with a 0.01μF hold capacitor and 5V logic supply. For larger logic swings, a smaller capacitor (< 10 pF) may be used.

Logic Rise Time

For proper operation, logic signals into the LF198 must have a minimum dV/dt of 0.2 V/μs. Slower signals will cause excessive hold step. If a R/C network is used in front of the logic input for signal delay, calculate the slope of the waveform at the threshold point to ensure that it is at least 0.2 V/μs.

Sampling Dynamic Signals

Sample error due to moving input signals probably causes more confusion among sample-and-hold users than any other parameter. The primary reason for this is that many users make the assumption that the sample and hold amplifier is truly locked on to the input signal while in the sample mode. In actuality, there are finite phase delays through the circuit creating an input-output differential for fast moving signals. In addition, although the output may have settled, the hold capacitor has an additional lag due to the 300Ω series resistor on the chip. This means that at the moment the "hold" command arrives, the hold capacitor voltage may be somewhat different than the actual analog input. The effect of these delays is opposite to the effect created by delays in the logic which switches the circuit from sample to hold. For example, consider an analog input of 20 Vp-p at 10 kHz. Maximum dV/dt is 0.6 V/μs. With no analog phase delay and 100 ns logic delay, one could expect up to (0.1μs)(0.6V/μs) = 60 mV error if the "hold" signal arrived near maximum dV/dt of the input. A positive-going input would give a ±60 mV error. Now assume a 1 MHz (3 dB) bandwidth for the overall analog loop. This generates a phase delay of 160 ns. If the hold capacitor sees this exact delay, then error due to analog delay will be (0.16μs)(0.6 V/μs) = –96 mV. Total output error is +60 mV (digital) –96 mV (analog) for a total of –36 mV. To add to the confusion, analog delay is proportional to hold capacitor value while digital delay remains constant. A family of curves (dynamic sampling error) is included to help estimate errors.

A curve labeled Aperture Time has been included for sampling conditions where the input is steady during the sampling period, but may experience a sudden change nearly coincident with the "hold" command. This curve is based on a 1 mV error fed into the output.

A second curve, Hold Settling Time indicates the time required for the output to settle to 1 mV after the "hold" command.

Digital Feedthrough

Fast rise time logic signals can cause hold errors by feeding externally into the analog input at the same time the amplifier is put into the hold mode. To minimize this problem, board layout should keep logic lines as far as possible from the analog input. Grounded guarding traces may also be used around the input line, especially if it is driven from a high impedance source. Reducing high amplitude logic signals to 2.5V will also help.

Guarding Technique

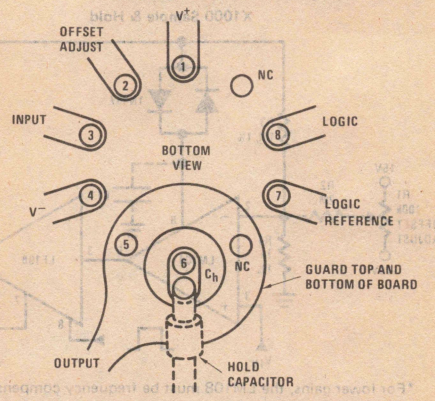

Use 10-pin layout. Guard around C_h is tied to output.

logic input configurations

TTL & CMOS
$3V \leq V_L$ (Hi State) $\leq 7V$

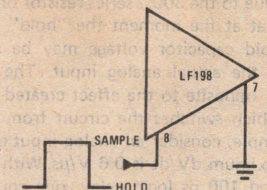

Threshold = 1.4V

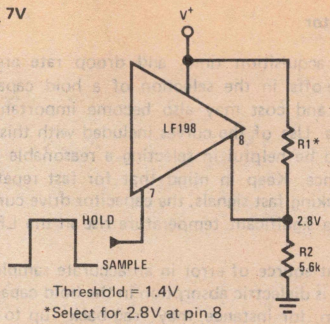

Threshold = 1.4V
*Select for 2.8V at pin 8

CMOS
$7V \leq V_L$ (Hi State) $\leq 15V$

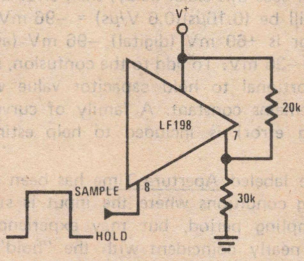

Threshold = 0.6 (V^+) + 1.4V

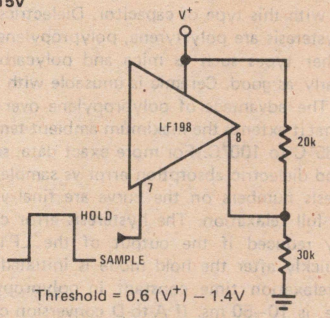

Threshold = 0.6 (V^+) − 1.4V

Op Amp Drive

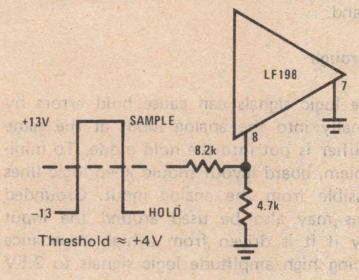

Threshold ≈ +4V

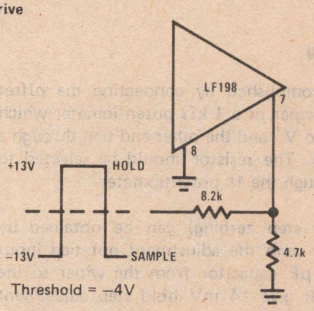

Threshold = −4V

typical applications (con't)

X1000 Sample & Hold

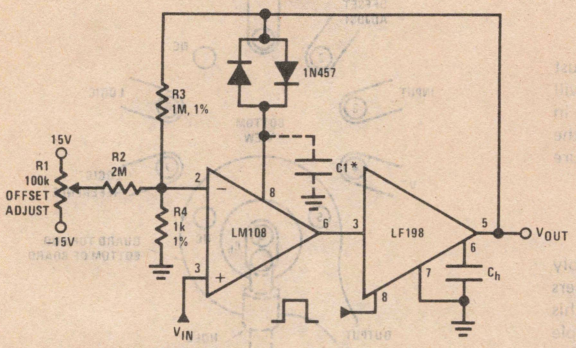

*For lower gains, the LM108 must be frequency compensated

Use ≈ $\frac{100}{A_V}$ pF from comp 2 to ground

Sample and Difference Circuit
(Output Follows Input in Hold Mode)

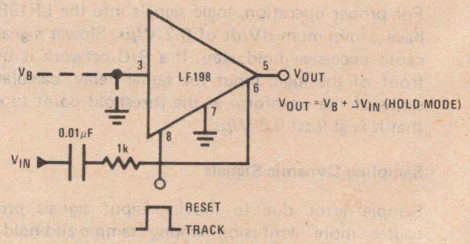

typical applications (con't)

Ramp Generator with Variable Reset Level

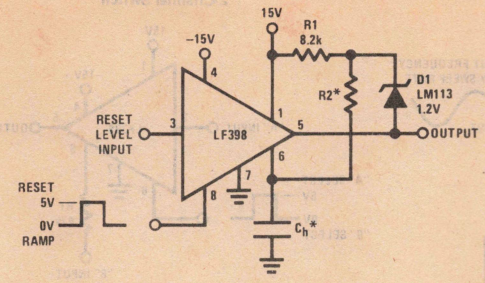

*Select for ramp rate $R \geq 10k$

$$\frac{\Delta V}{\Delta T} = \frac{1.2V}{(R2)(C_h)}$$

Integrator with Programmable Reset Level

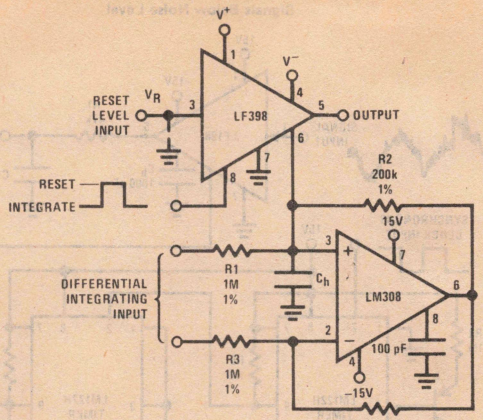

$$V_{OUT}\text{ (Hold Mode)} = \left[\frac{1}{(R1)(C_h)}\int_0^t V_{IN}\,dt\right] + \left[V_R\right]$$

Output Holds at Average of Sampled Input

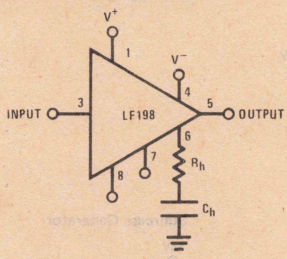

$$\text{Select } (R_h)(C_h) >> \frac{1}{2\pi f_{IN}\text{ (Min)}}$$

Increased Slew Current

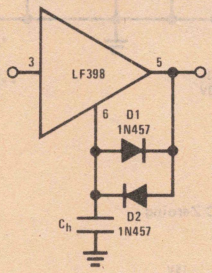

Reset Stabilized Amplifier (Gain of 1000)

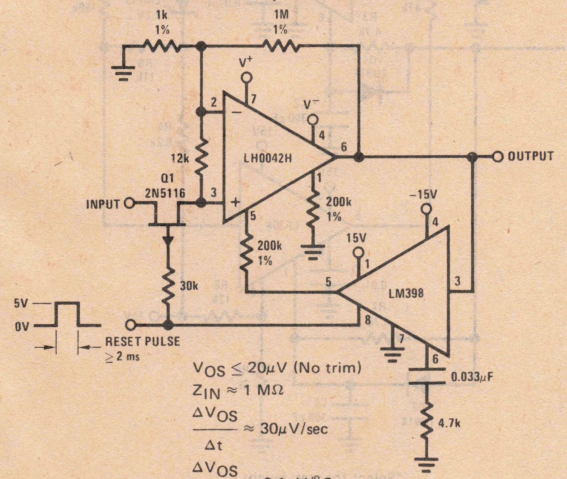

$V_{OS} \leq 20\mu V$ (No trim)

$Z_{IN} \approx 1\ M\Omega$

$$\frac{\Delta V_{OS}}{\Delta t} \approx 30\mu V/sec$$

$$\frac{\Delta V_{OS}}{\Delta T} \approx 0.1\mu V/°C$$

Fast Acquisition, Low Droop Sample & Hold

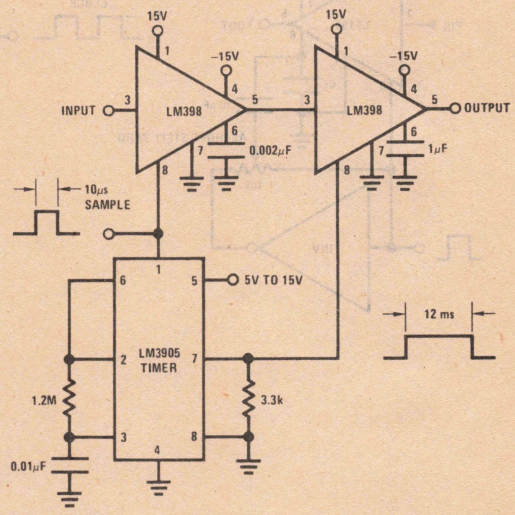

typical applications (con't)

Synchronous Correlator for Recovering Signals Below Noise Level

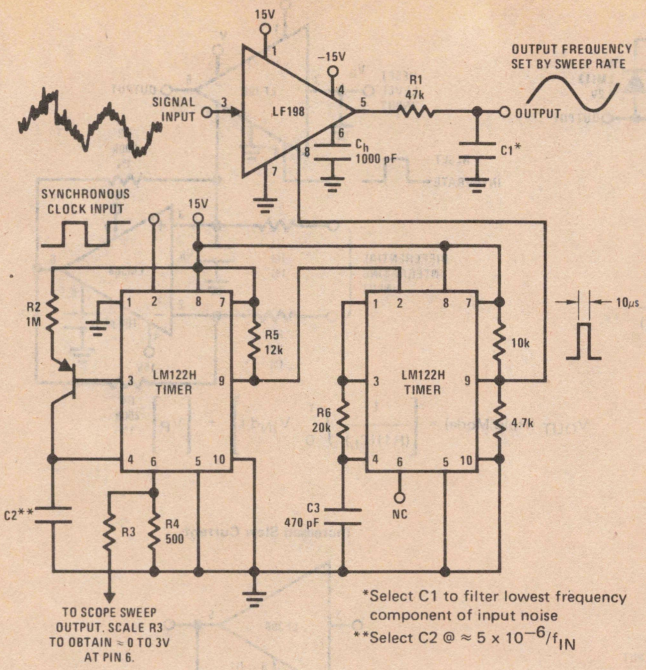

*Select C1 to filter lowest frequency component of input noise

**Select C2 @ $\approx 5 \times 10^{-6}/f_{IN}$

2-Channel Switch

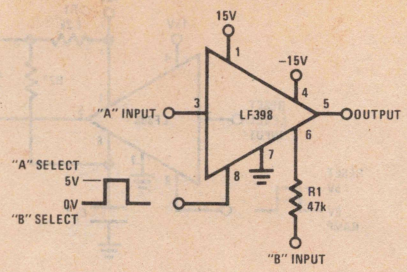

	A	B
Gain	1 ±0.02%	1 ±0.2%
Z_{IN}	$10^{10}\Omega$	47 kΩ
BW	≃1 MHz	≈400 kHz
Crosstalk @ 1 kHz	−90 dB	−90 dB
Offset	≤ 6 mV	≤ 75 mV

DC & AC Zeroing

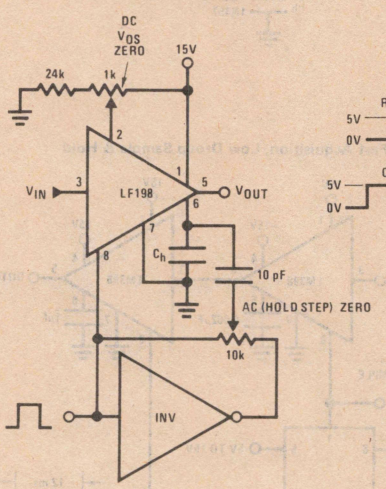

Staircase Generator

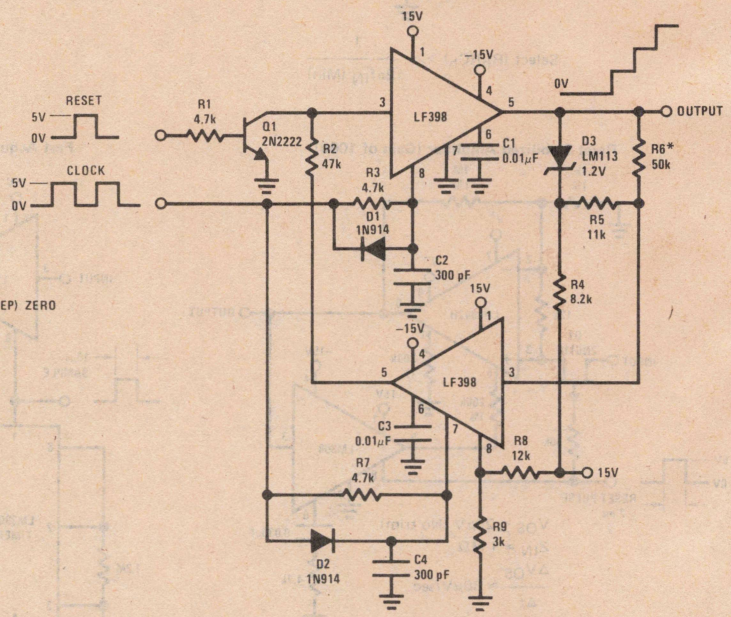

*Select for step height 50k → ≃ 1V Step

typical applications (con't)

Capacitor Hysteresis Compensation

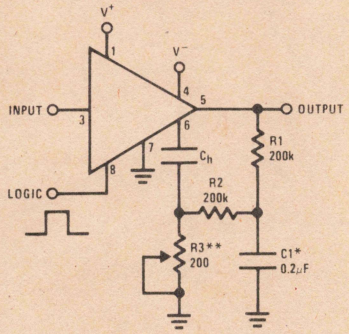

*Select for time constant C1 = $\frac{\tau}{100k}$

**Adjust for amplitude

Differential Hold

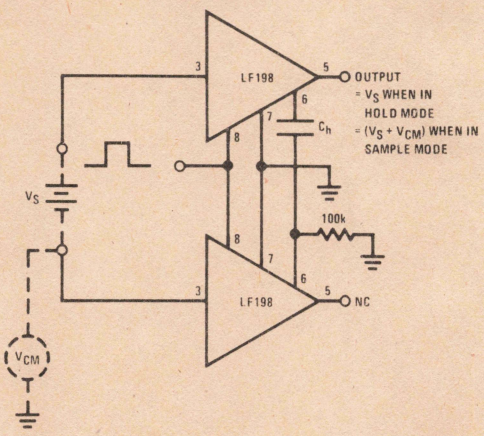

connection diagram

Dual-In-Line Package

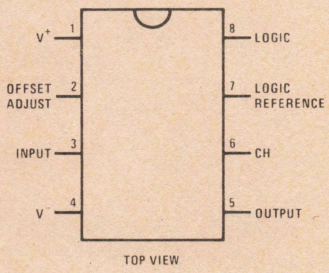

Order Number LF198J, LF298J or LF398J
See NS Package J08A

Order Number LF398N
See NS Package N08B

Metal Can Package

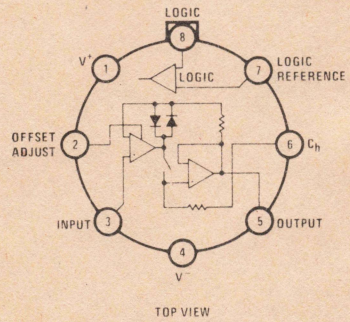

Order Number LF198H, LF298H or LF398H
See NS Package H08C

typical applications (cont'd)

Differential Input

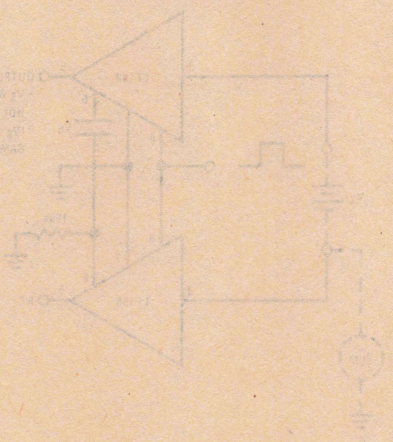

Capacitor Hysteresis Compensation

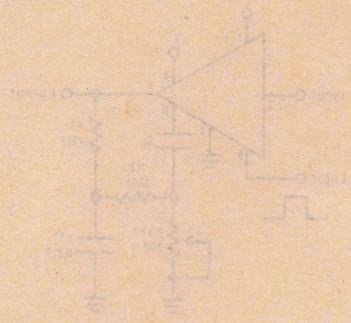

connection diagram

Metal Can Package

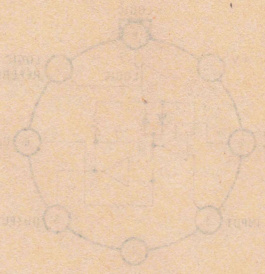

Order Number LF198H, LF298H or LF398H
See NS Package H08C

Dual-In-Line Package

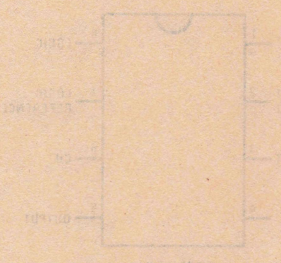

Order Number LF198J, LF298J or LF398J
See NS Package J08A

Order Number LF398N
See NS Package N08A

Section 5

Comparators

5

National Semiconductor

LH2111/LH2211/LH2311 Dual Voltage Comparator

general description

The LH2111 series of dual voltage comparators are two LM111 type comparators in a single hermetic package. Featuring all the same performance characteristics of the single, these duals offer in addition closer thermal tracking, lower weight, reduced insertion cost and smaller size than two singles. For additional information see the LM111 data sheet and National's Linear Application Handbook.

The LH2111 is specified for operation over the −55°C to +125°C military temperature range. The LH2211 is specified for operation over the −25°C to +85°C temperature range. The LH2311 is specified for operation over the 0°C to 70°C temperature range.

features

■ Wide operating supply range	±15V to a single +5V
■ Low input currents	6 nA
■ High sensitivity	10 μV
■ Wide differential input range	±30V
■ High output drive	50 mA, 50V

connection diagram

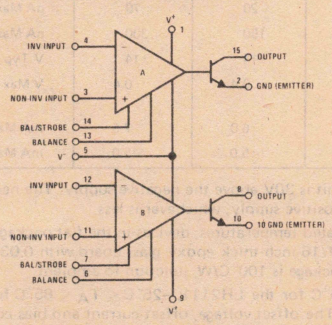

Order Number LH2111D or or LH2211D or LH2311D
See Package D16C

auxiliary circuits

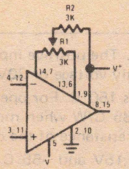

Offset Balancing

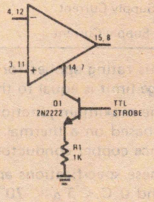

Strobing

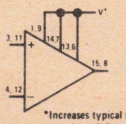

*Increases typical common mode slew from 7.0V/μs to 18V/μs.

Increasing Input Stage Current*

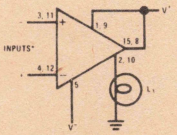

Driving Ground-Referred Load

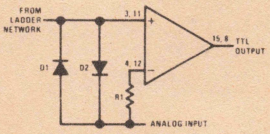

Using Clamp Diodes to Improve Responses

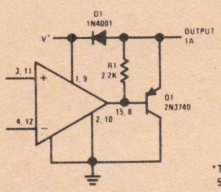

Comparator and Solenoid Driver

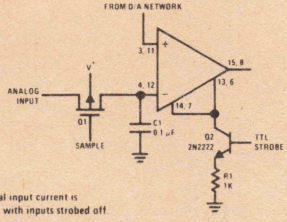

*Typical input current is 50 pA with inputs strobed off.

Strobing off Both Input* and Output Stages

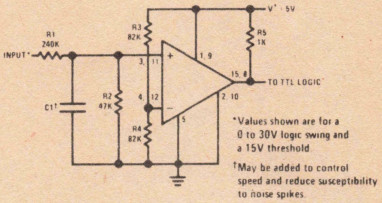

*Values shown are for a 0 to 30V logic swing and a 15V threshold.

†May be added to control speed and reduce susceptibility to noise spikes.

TTL Interface with High Level Logic

absolute maximum ratings

Total Supply Voltage ($V^+ - V^-$)	36V	Output Short Circuit Duration	10 sec
Output to Negative Supply Voltage ($V_{OUT} - V^-$)	50V	Operating Temperature Range LH2111	−55°C to 125°C
Ground to Negative Supply Voltage ($GND - V^-$)	30V	LH2211	−25°C to 85°C
Differential Input Voltage	±30V	LH2311	0°C to 70°C
Input Voltage (Note 1)	±15V	Storage Temperature Range	−65°C to 150°C
Power Dissipation (Note 2)	500 mW	Lead Temperature (Soldering, 10 sec)	300°C

electrical characteristics – each side (Note 3)

PARAMETER	CONDITIONS	LIMITS			UNITS
		LH2111	LH2211	LH2311	
Input Offset Voltage (Note 4)	$T_A = 25°C$, $R_S \leq 50k$	3.0	3.0	7.5	mV Max
Input Offset Current (Note 4)	$T_A = 25°C$	10	10	50	nA Max
Input Bias Current	$T_A = 25°C$	100	100	250	nA Max
Voltage Gain	$T_A = 25°C$	200	200	200	V/mV Typ
Response Time (Note 5)	$T_A = 25°C$	200	200	200	ns Typ
Saturation Voltage	$V_{IN} \leq -5$ mV, $I_{OUT} = 50$ mA $T_A = 25°C$	1.5	1.5	1.5	V Max
Strobe On Current	$T_A = 25°C$	3.0	3.0	3.0	mA Typ
Output Leakage Current	$V_{IN} \geq 5$ mV, $V_{OUT} = 35V$ $T_A = 25°C$	10	10	50	nA Max
Input Offset Voltage (Note 4)	$R_S \leq 50k$	4.0	4.0	10	mV Max
Input Offset Current (Note 4)		20	20	70	nA Max
Input Bias Current		150	150	300	nA Max
Input Voltage Range		±14	±14	±14	V Typ
Saturation Voltage	$V^+ \geq 4.5V$, $V^- = 0$ $V_{IN} \leq -5$ mV, $I_{SINK} \leq 8$ mA	0.4	0.4	0.4	V Max
Positive Supply Current	$T_A = 25°C$	6.0	6.0	7.5	mA Max
Negative Supply Current	$T_A = 25°C$	5.0	5.0	5.0	mA Max

Note 1: This rating applies for ±15V supplies. The positive input voltage limit is 30V above the negative supply. The negative input voltage limit is equal to the negative supply voltage or 30V below the positive supply, whichever is less.

Note 2: The maximum junction temperature is 150°C. For operating at elevated temperatures, devices in the flat package, the derating is based on a thermal resistance of 185°C/W when mounted on a 1/16-inch-thick epoxy glass board with 0.03-inch-wide, 2 ounce copper conductor. The thermal resistance of the dual-in-line package is 100°C/W, junction to ambient.

Note 3: These specifications apply for $V_S = \pm 15V$ and $-55°C \leq T_A \leq 125°C$ for the LH2111, $-25°C \leq T_A \leq 85°C$ for the LH2211, and $0°C \leq T_A \leq 70°C$ for the LH2311, unless otherwise stated. The offset voltage, offset current and bias current specifications apply for any supply voltage from a single 5V supply up to ±15V supplies. For the LH2311, $V_{IN} = \pm 10$ mV.

Note 4: The offset voltages and offset currents given are the maximum values required to drive the output within a volt of either supply with a 1 mA load. Thus, these parameters define an error band and take into account the worst case effects of voltage gain and input impedance.

Note 5: The response time specified is for a 100 mV input step with 5 mV overdrive.

Section 6

Non-Linear Functions

6

Section 6. Non-Linear Functions

Function	Characteristics	Transfer Characteristics	Part Number −55°C to 125°C	Part Number −25°C to 85°C	Page Number
True RMS to DC Converter	0.05% accuracy, 100 KHz bandwidth, crest factor 5 minimum	$E_{OUT} = \sqrt{\frac{1}{T}\int_0^T E_{IN}^2(t)dt}$	LH0091D	LH0091CD	6-4
Multifunction Converter	0.05% accuracy, device multiplies, divides, square roots, raises to fractional powers	$E_{OUT} = V_Y\left(\frac{V_Z}{V_X}\right)^m$	LH0094D	LH0094CD	6-9

National Semiconductor

LH0091 True RMS to DC Converter

general description

The LH0091, rms to dc converter, generates a dc output equal to the rms value of any input per the transfer function:

$$E_{OUT(DC)} = \sqrt{\frac{1}{T}\int_0^T E_{IN}^2(t)\,dt}$$

The device provides rms conversion to an accuracy of 0.1% of reading using the external trim procedure. It is possible to trim for maximum accuracy (0.5 mV ±0.05% typ) for decade ranges i.e., 10 mV → 100 mV, 0.7V → 7V, etc.

features

- Low cost
- True rms conversion
- 0.5% of reading accuracy untrimmed
- 0.05% of reading accuracy with external trim
- Minimum component count
- Input voltage to ±15V peak for V_S = ±15V
- Uncommitted amplifier for filtering, gain, or high crest factor configuration
- Military or commercial temperature range.

block and connection diagrams

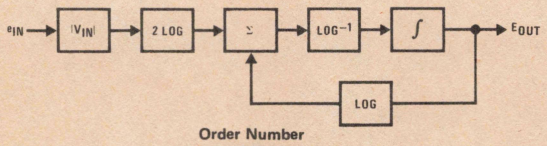

Order Number
LH0091D
LH0091CD
See Package D16D

Dual-In-Line Package

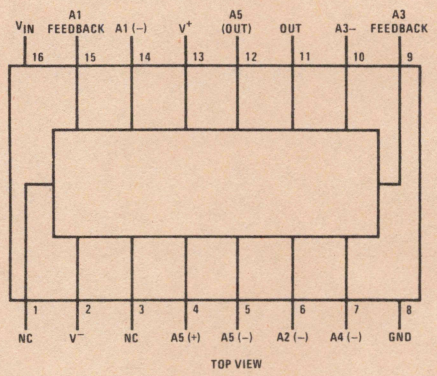

simplified schematic

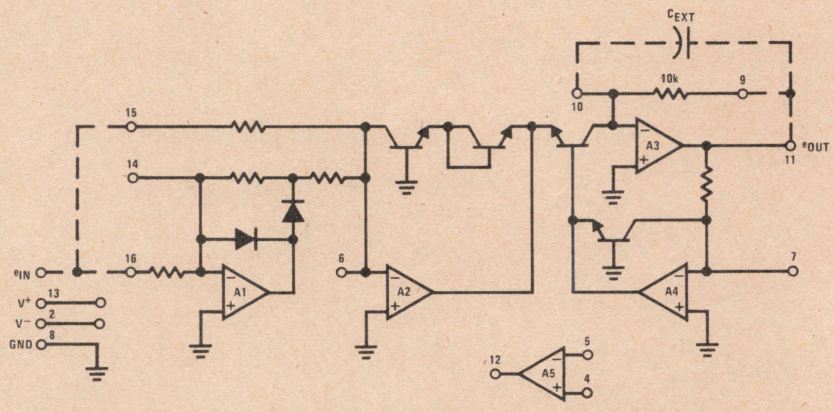

Note: Dotted lines denote external connections.

absolute maximum ratings

Supply Voltage		±22V
Input Voltage		±15V peak
Output Short Circuit Duration		Continuous
Operating Temperature Range	T_{MIN}	T_{MAX}
LH0091	−55°C	125°C
LH0091C	−25°C	85°C
Storage Temperature Range		
LH0091	−65°C to +150°C	
LH0091C	−25°C to +85°C	
Lead Temperature (Soldering, 10 seconds)		300°C

electrical characteristics $V_S = \pm 15V$, $T_A = 25°C$, unless otherwise specified.

Transfer Function = $E_{O(DC)} = \sqrt{\frac{1}{T}\int_0^T E_{IN}^2(t)\,dt}$

PARAMETER	CONDITIONS	MIN	TYP	MAX	UNITS
ACCURACY (See Definition of Terms)					
Total Unadjusted Error	50 mVrms ≤ V_{IN} ≤ 7Vrms *(Figure 1)*		20, ±0.5	40, ±1.0	mV, %
Total Adjusted Error	50 mVrms ≤ V_{IN} ≤ 7Vrms *(Figure 3)*		0.5, ±0.05	1, ±0.2	mV, %
Total Unadjusted Error vs Temperature	−25°C ≤ T_A ≤ +70°C		0.25, ±0.02%		mV, %/°C
Total Unadjusted Error vs Supply Voltage			1		mV/V
AC PERFORMANCE					
Frequency for Specified Adjusted Error	Input = 7Vrms, Sinewave *(Figure 3)*	30	70		kHz
	Input = 0.7Vrms, Sinewave *(Figure 3)*		40		kHz
	Input = 0.1Vrms, Sinewave *(Figure 3)*		20		kHz
Frequency for 1% Additional Error	Input = 7Vrms, Sinewave *(Figure 3)*	100	200		kHz
	Input = 0.7Vrms, Sinewave *(Figure 3)*		75		kHz
	Input = 0.1Vrms, Sinewave *(Figure 3)*		50		kHz
Bandwidth (3 dB)	Input = 7Vrms, Sinewave *(Figure 3)*		2		MHz
	Input = 0.7Vrms, Sinewave *(Figure 3)*		1.5		MHz
	Input = 0.1Vrms, Sinewave *(Figure 3)*		0.8		MHz
Crest Factor	Rated Adjusted Accuracy Using the High Crest Factor Circuit *(Figure 5)*	5	10		
INPUT CHARACTERISTICS					
Input Voltage Range	For Rated Performance	±0.05		±11	Vpeak
Input Impedance		4.5	5		kΩ
OUTPUT CHARACTERISTICS					
Rated Output Voltage	$R_L \geq 2.5$ kΩ	10			V
Output Short Circuit Current			22		mA
Output Impedance			1		Ω
POWER SUPPLY REQUIREMENTS					
Operating Range		±5		±20	V
Quiescent Current	$V_S = \pm 15V$		14	18	mA

op amp electrical characteristics $V_S = \pm 15V$, $T_A = 25°C$ unless otherwise specified

PARAMETER		CONDITIONS	MIN	TYP	MAX	UNITS
V_{OS}	Input Offset Voltage	$R_S \leq 10\ k\Omega$		1.0	10	mV
I_{OS}	Input Offset Current			4.0	200	nA
I_B	Input Bias Current			30	500	nA
R_{IN}	Input Resistance			2.5		MΩ
A_{OL}	Large Signal Voltage Gain	$V_{OUT} = \pm 10V$, $R_L \geq 2\ k\Omega$	15	160		V/mV
V_O	Output Voltage Swing	$R_L = 10\ k\Omega$	±10	±13		V
V_I	Input Voltage Range		±10			V
CMRR	Common-Mode Rejection Ratio	$R_S \leq 10\ k\Omega$		90		dB
PSRR	Supply Voltage Rejection Ratio	$R_S \leq 10\ k\Omega$		96		dB
I_{SC}	Output Short-Circuit Current			25		mA
S_r	Slew Rate (Unity Gain)			0.5		V/μs
BW	Small Signal Bandwidth			1.0		MHz

typical performance characteristics

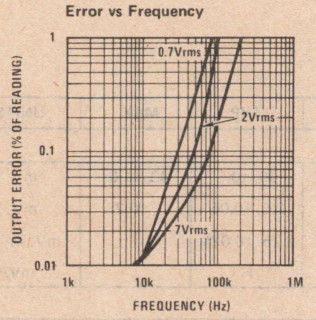

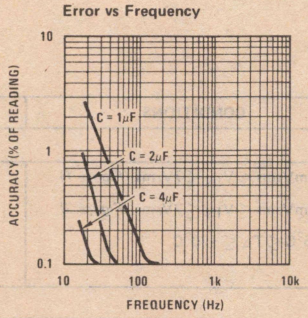

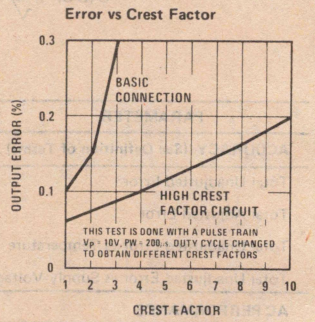

typical applications (All applications require power supply by-pass capacitors.)

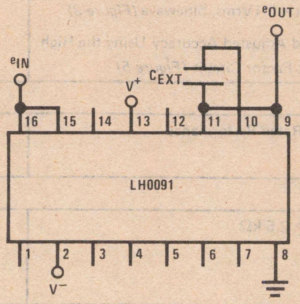

$C_{EXT} \geq 1\mu F$; frequency ≥ 1 kHz

FIGURE 1. LH0091 Basic Connection (No Trim)

typical applications (con'd)

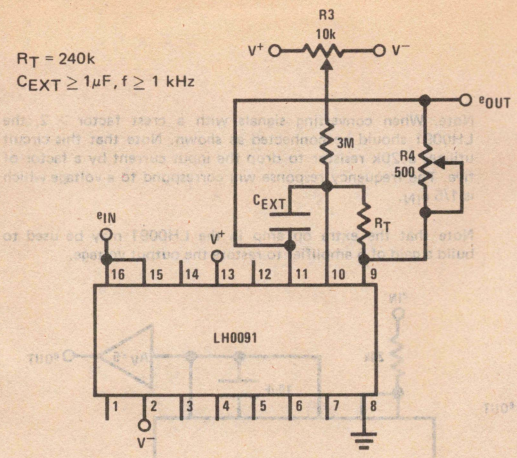

Note. The easy trim procedure is used for ac coupled input signals. It involves two trims and can achieve accuracies of 2 mV offset ±0.1% reading.

Procedure:

1. Apply 100 mV rms (sine wave) to input, adjust R3 until the output reads 100 mV_{DC}.
2. Apply 5 V_{rms} (sine wave) to input, adjust R4 until the output reads 5 V_{DC}.
3. Repeat steps 1 and 2 until the desired initial accuracy is achieved.

FIGURE 2. LH0091 "Easy Trim" (For ac Inputs Only)

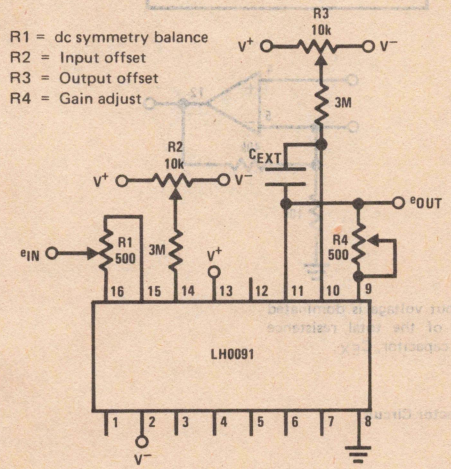

Note. This procedure will give accuracies of 0.5 mV offset ±0.05% reading for inputs from 0.05V peak to 10V peak.

Procedure:

1. Apply 50 mV_{DC} to the input. Read and record the output.
2. Apply −50 mV_{DC} to the input. Use R2 to adjust for an output of the same magnitude as in step 1.
3. Apply 50 mV to the input. Use R3 to adjust the output for 50 mV.
4. Apply −50 mV to input. Use R2 to adjust the output for 50 mV.
5. Apply ±10V alternately to the input. Adjust R1 until the output readings for both polarities are equal (not necessary that they be exactly 10V).
6. Apply 10V to the input. Use R4 to adjust for 10V at the output.
7. Repeat this procedure to obtain the desired accuracy.

FIGURE 3. LH0091 Standard dc Trim Procedure

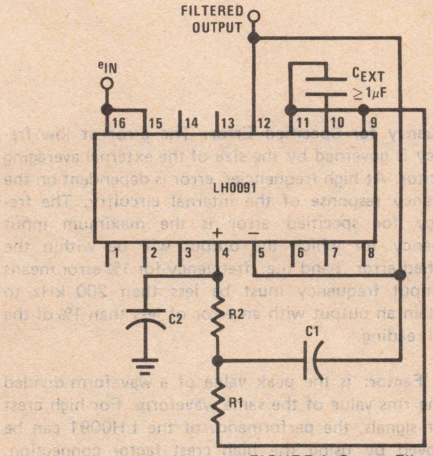

Note. The additional op amp in the LH0091 may be used as a low pass filter as shown in *Figure 4*.

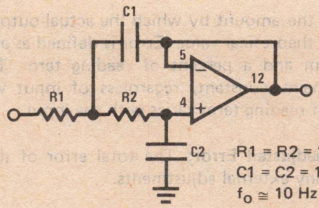

FIGURE 4. Output Filter Connection Using the Internal Op Amp

typical applications (con'd)

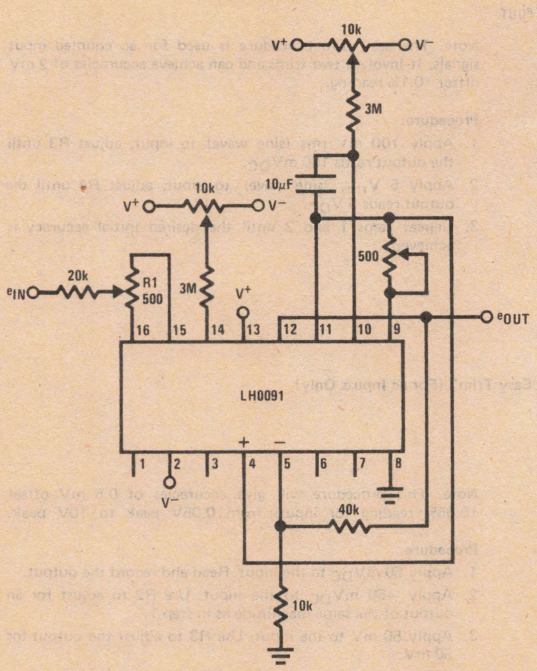

Note. When converting signals with a crest factor ≥ 2, the LH0091 should be connected as shown. Note that this circuit utilizes a 20k resistor to drop the input current by a factor of five. The frequency response will correspond to a voltage which is 1/5 e_{IN}.

Note that the extra op amp in the LH0091 may be used to build a gain of 5 amplifier to restore the output voltage.

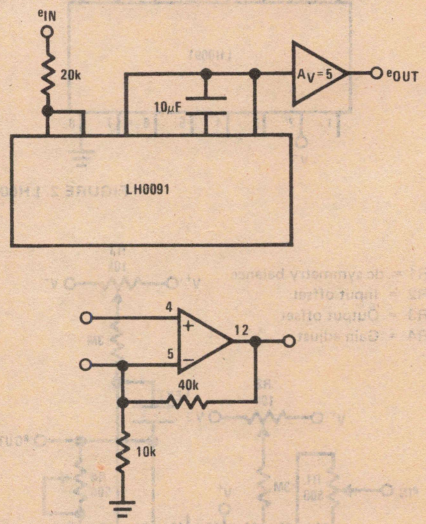

Note. Response time of the dc output voltage is dominated by the RC time constant consisting of the total resistance between pins 9 and 10 and the external capacitor, C_{EX}.

FIGURE 5. High Crest Factor Circuit

definition of terms

True rms to dc Converter: A device which converts any signal (ac, dc, ac + dc) to the dc equivalent of the rms value.

Error: is the amount by which the actual output differs from the theoretical value. Error is defined as a sum of a fixed term and a percent of reading term. The fixed term remains constant, regardless of input while the percent of reading term varies with the input.

Total Unadjusted Error: The total error of the device without any external adjustments.

Bandwidth: The frequency at which the output dc voltage drops to 0.707 of the dc value at low frequency.

Frequency for Specified Error: The error at low frequency is governed by the size of the external averaging capacitor. At high frequencies, error is dependent on the frequency response of the internal circuitry. The frequency for specified error is the maximum input frequency for which the output will be within the specified error band (i.e., frequency for 1% error means the input frequency must be less than 200 kHz to maintain an output with an error of less than 1% of the initial reading.

Crest Factor: is the peak value of a waveform divided by the rms value of the same waveform. For high crest factor signals, the performance of the LH0091 can be improved by using the high crest factor connection.

National Semiconductor

LH0094 Multifunction Converter

General Description

The LH0094 multifunction converter generates an output voltage per the transfer function:

$$E_O = V_Y \left(\frac{V_Z}{V_X}\right)^m, \; 0.1 \leq m \leq 10, \text{ m continuously adjustable}$$

m is set by 2 resistors.

Features

- Low cost
- Versatile
- High accuracy—0.05%
- Wide supply range—±5V to ±22V
- Minimum component count
- Internal matched resistor pair for setting m = 2 and m = 0.5

Applications

- Precision divider, multiplier
- Square root
- Square
- Trigonometric function generator
- Companding
- Linearization
- Control systems
- Log amp

Block and Connection Diagrams

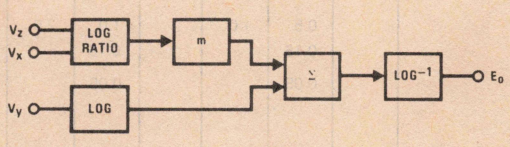

Order Number
LH0094D
LH0094CD
See Package D16D

Dual-In-Line Package

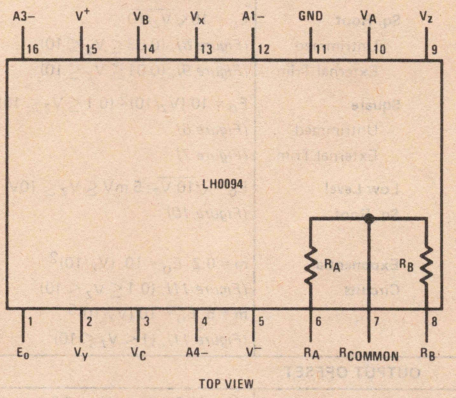

Simplified Schematic

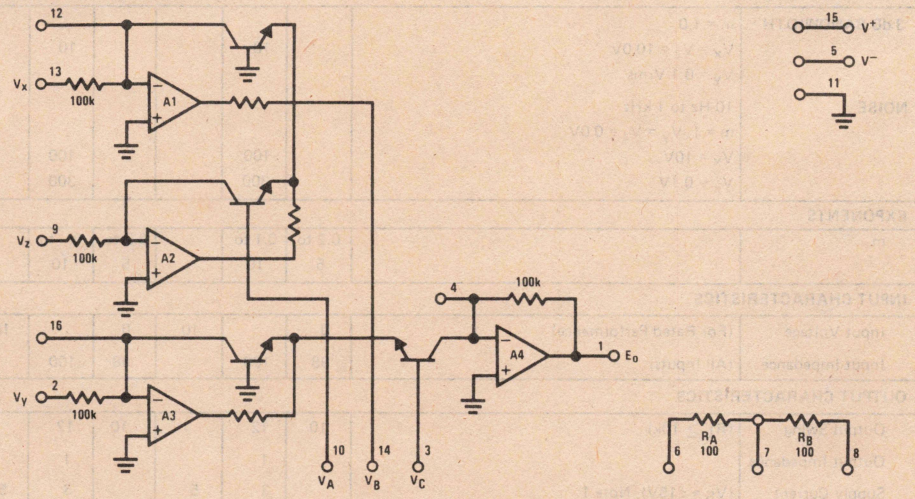

Absolute Maximum Ratings

Supply Voltage	±22V
Input Voltage	±22V
Output Short-Circuit Duration	Continuous
Operating Temperature Range	
LH0094CD	−25°C to +85°C
LH0094D	−55°C to +125°C
Storage Temperature Range	
LH0094D	−65°C to +150°C
LH0094CD	−55°C to +125°C
Lead Temperature (Soldering, 10 seconds)	300°C

Electrical Characteristics

$V_S = \pm 15V$, $T_A = 25°C$ unless otherwise specified. Transfer function: $E_o = V_y \left(\frac{V_z}{V_x}\right)^m$; $0.1 \leq m \leq 10$; $0V \leq V_x, V_y, V_z \leq 10V$

PARAMETER	CONDITIONS	LH0094 MIN	LH0094 TYP	LH0094 MAX	LH0094C MIN	LH0094C TYP	LH0094C MAX	UNITS
ACCURACY								
Multiply	$E_o = \frac{V_z V_y}{10}$ $(0.03 \leq V_y \leq 10V; 0.01 \leq V_z \leq 10V)$							% F.S.
Untrimmed	*(Figure 2)*		0.25	0.45		0.45	0.9	(10V)
External Trim	*(Figure 3)*		0.10			0.1		% F.S.
	vs Temperature		0.2			0.2		mV/°C
Divide	$E_o = 10\, V_z/V_x$							
Untrimmed	*(Figure 4)*, $(0.5 \leq V_x \leq 10; 0.01 \leq V_z \leq 10)$		0.25	0.45		0.45	0.9	% F.S.
External Trim	*(Figure 5)*, $(0.1 \leq V_x \leq 10; 0.01 \leq V_z \leq 10)$		0.10			0.1		% F.S.
	vs Temperature		0.2			0.2		mV/°C
Sq. Root	$E_o = 10\sqrt{V_z/10}$							
Untrimmed	*(Figure 8)*, $(0.03 \leq V_z \leq 10)$		0.25	0.45		0.45	0.9	% F.S.
External Trim	*(Figure 9)*, $(0.01 \leq V_z \leq 10)$		0.15			0.15		% F.S.
Square	$E_o = 10\,(V_z/10)^2$ $(0.1 \leq V_z \leq 10)$							
Untrimmed	*(Figure 6)*		0.5	1.0		1.0	2.0	% F.S.
External Trim	*(Figure 7)*		0.15			0.15		% F.S.
Low Level Sq. Root	$E_o = \sqrt{10\, V_z}$; $5\,mV \leq V_z \leq 10V$ *(Figure 10)*		0.05			0.05		% F.S.
Exponential Circuits	**m = 0.2** $E_o = 10\,(V_z/10)^2$ *(Figure 11)*, $(0.1 \leq V_z \leq 10)$		0.05			0.08		% F.S.
	m = 5 $E_o = 10\,(V_z/10)^5$ *(Figure 11)*, $(1 \leq V_z \leq 10)$		0.05			0.08		% F.S.
OUTPUT OFFSET								
	$V_x = 10.0V$, $V_y = V_z = 0.0$		2	5		5	10	mV
AC CHARACTERISTICS								
3 dB BANDWIDTH	m = 1.0, $V_x = V_z = 10.0V$, $V_y = 0.1$ Vrms		10			10		kHz
NOISE	10 Hz to 1 kHz, m = 1, $V_y = V_z = 0.0V$, $V_x = 10V$		100			100		μVrms
	$V_x = 0.1V$		300			300		μVrms
EXPONENTS								
m.		0.2 to 5	0.1 to 10		0.2 to 5	0. to 10		
INPUT CHARACTERISTICS								
Input Voltage	(For Rated Performance)	0		10	0		10	V
Input Impedance	(All Inputs)	98	100		98	100		kΩ
OUTPUT CHARACTERISTICS								
Output Swing	$(R_L \geq 10k)$	10	12		10	12		V
Output Impedance			1			1		Ω
Supply Current	$(V_S = \pm 15V)$, Note 1		3	5		3	5	mA

Applications Information

GENERAL INFORMATION

Power supply bypass capacitors (0.1 μF) are recommended for all applications.

The LH0094 series is designed for positive input signals only. However, negative input up to the supply voltage will not damage the device.

A clamp diode *(Figure 1)* is recommended for those applications in which the inputs may be subjected to open circuit or negative input signals.

For basic applications (multiply, divide, square, square root) it is possible to use the device without any external adjustments or components. Two matched resistors are provided internally to set m for square or square root.

When using external resistors to set m, such resistors should be as close to the device as possible.

SELECTION OF RESISTORS TO SET m

Internal Matched Resistors

R_A and R_B are matched internal resistors. They are 100Ω ±10%, but matched to 0.1%.

(a) m = 2*

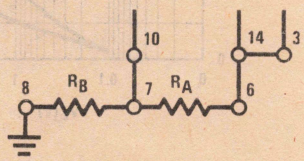

(b) m = 0.5*

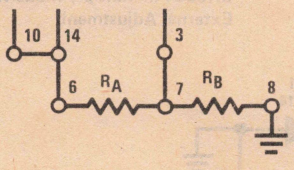

*No external resistors required, strap as indicated

External Resistors

The exponent is set by 2 external resistors or it may be continuously varied by a single trim pot. (R1 + R2 ≤ 500Ω.

(a) m = 1

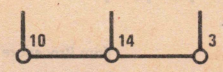

(b) m < 1

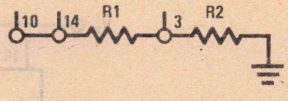

$$m = \frac{R2}{R1 + R2} \qquad R1 + R2 \approx 200\Omega$$

(c) m > 1

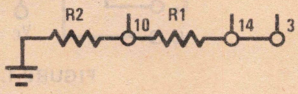

$$m = \frac{R1 + R2}{R2}$$

ACCURACY (ERROR)

The accuracy of the LH0094 is specified for both externally adjusted and unadjusted cases.

Although it is customary to specify the errors in percent of full-scale (10V), it is seen from the typical performance curves that the actual errors are in percent of reading. Thus, the specified errors are overly conservative for small input voltages. An example of this is the LH0094 used in the multiplication mode. The specified typical error is 0.25% of full-scale (25 mV). As seen from the curve, the unadjusted error is ≈ 25 mV at 10V input, but the error is less than 10 mV for inputs up to 1V. Note also that if either the multiplicand or the multiplier is at less than 10V, (5V for example) the unadjusted error is less. Thus, the errors specified are at full-scale—the worst case.

The LH0094 is designed such that the user is able to externally adjust the gain and offset of the device—thus trim out all of the errors of conversion. In most applications, the gain adjustment is the only external trim needed for super accuracy—except in division mode, where a denominator offset adjust is needed for small denominator voltages.

EXPONENTS

The LH0094 is capable of performing roots to 0.1 and powers up to 10. However, care should be taken when applying these exponents—otherwise, results may be misinterpreted. For example, consider the 1/10th power of a number: i.e., 0.001 raised to 0.1 power is 0.5011; 0.1 raised to the 0.1 power is 0.7943; and 10 raised to the 0.1 power is 1.2589. Thus, it is seen that while the input has changed 4 decades, the output has only changed a little more than a factor of 2. It is also seen that with as little as 1 mV of offset, the output will also be greater than zero with zero input.

Applications Information (Continued)

1. CLAMP DIODE CONNECTION

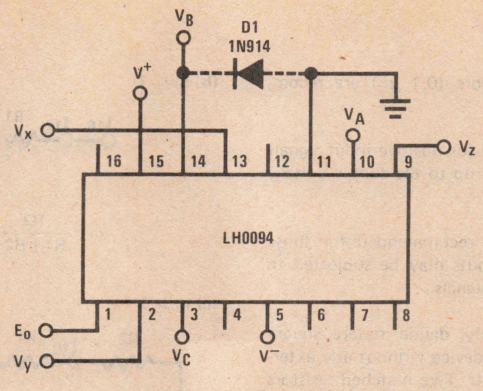

$$E_o = V_y \left(\frac{V_z}{V_x}\right)^m$$

$0.1 \leq m \leq 10$

Note. This clamp diode connection is recommended for those applications in which the inputs may be subject to open circuit or negative signals.

FIGURE 1. Clamp Diode Connection

2. MULTIPLY

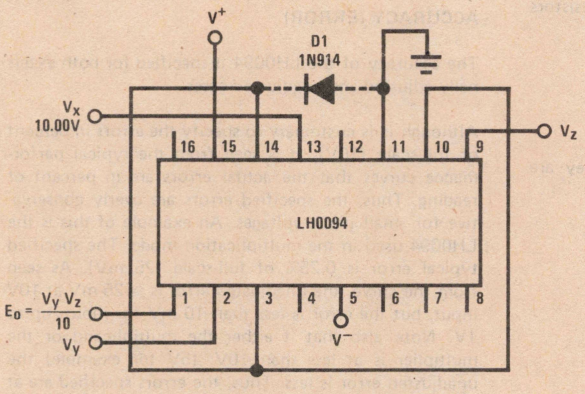

FIGURE 2a. LH0094 Used to Multiply (No External Adjustment)

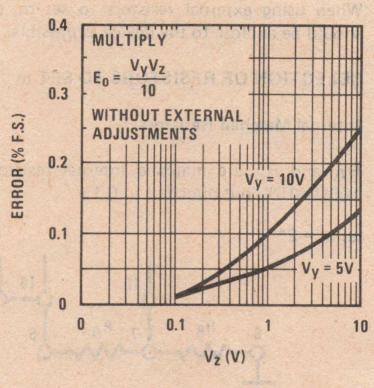

FIGURE 2b. Typical Performance of LH0094 in Multiply Mode Without External Adjustment

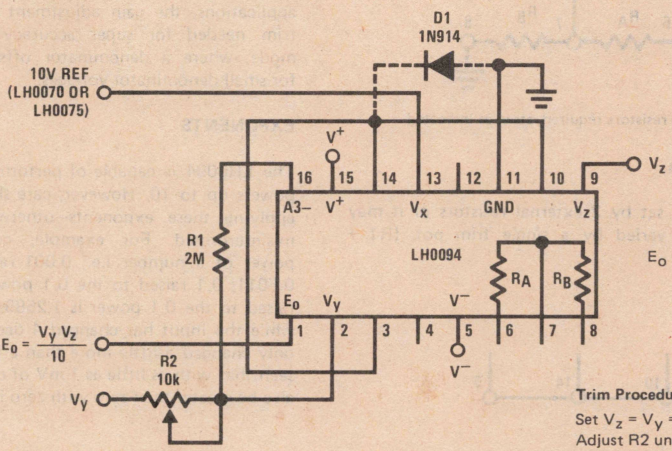

$$E_o = \frac{V_y V_z}{10} \qquad m = 1$$

Trim Procedure

Set $V_z = V_y = 10V$

Adjust R2 until output = 10.000V

FIGURE 3. Precision Multiplier (0.02% Typ) with 1 External Adjustment

Applications Information (Continued)

3. DIVIDE

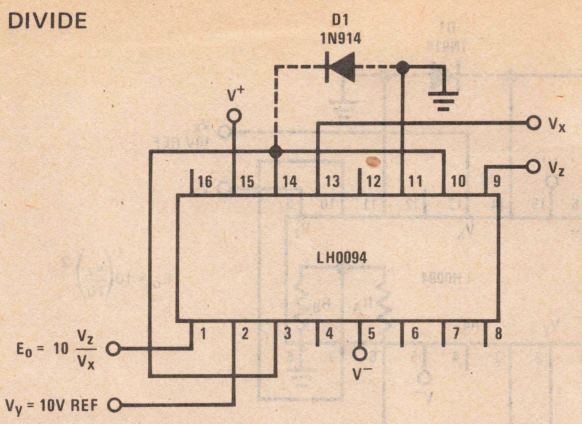

FIGURE 4a. LH0094 Used to Divide (No External Adjustment)

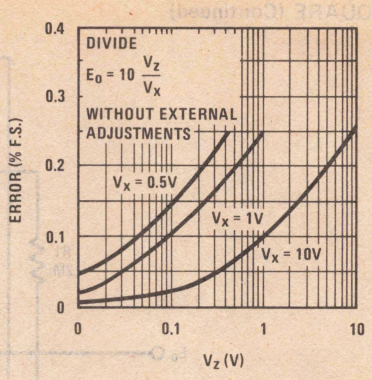

FIGURE 4b. Typical Performance, Divide Mode, Without External Adjustments

Trim Procedures

Apply 10V to V_y, 0.1V to V_x and V_z.
Adjust R3 until E_o = 10.000V.

Apply 10.000V to all inputs.
Adjust R2 until E_o = 10.000V

Repeat procedure.

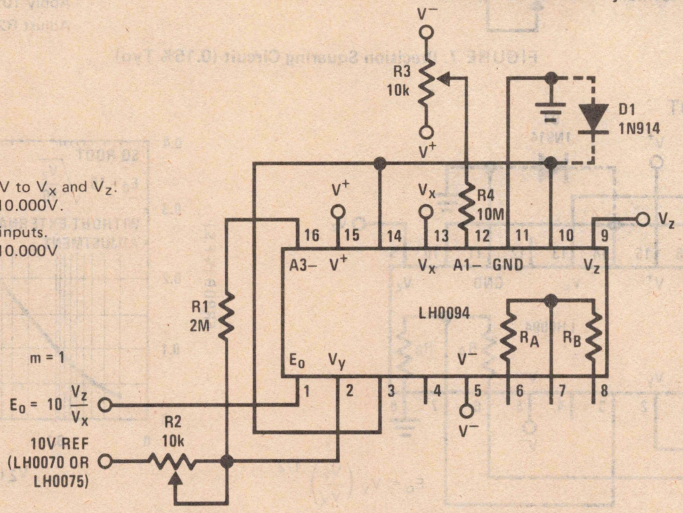

FIGURE 5. Precision Divider (0.05% Typ)

4. SQUARE

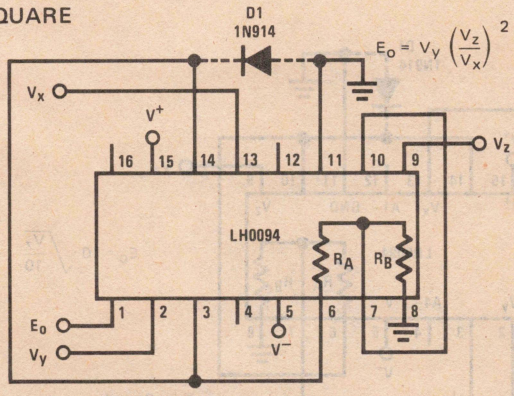

FIGURE 6a. Basic Connection of LH0094 (m = 2) without External Adjustment Using Internal Resistors to Set m

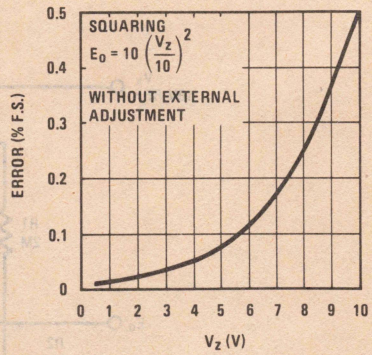

FIGURE 6b. Squaring Mode without External Adjustment

Applications Information (Continued)

4. SQUARE (Continued)

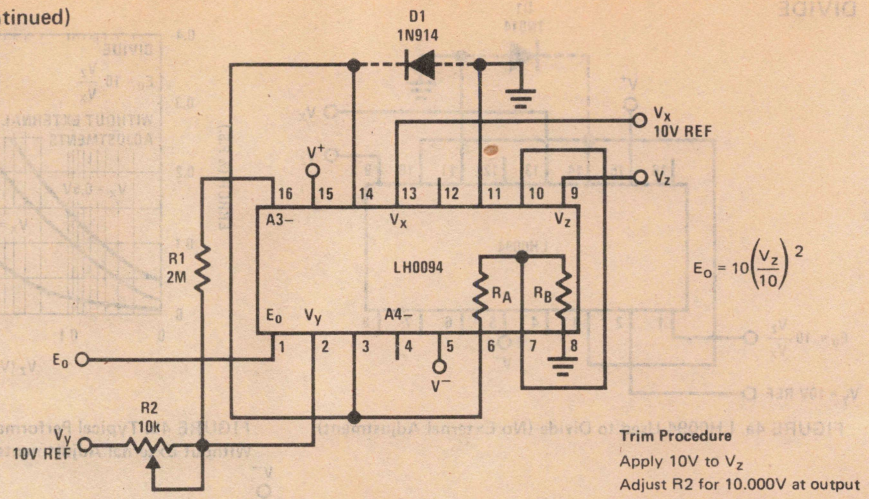

FIGURE 7. Precision Squaring Circuit (0.15% Typ)

5. SQUARE ROOT

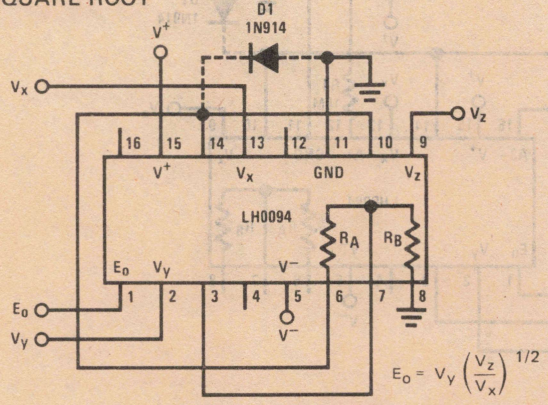

FIGURE 8a. Basic Connection of LH0094 (m = 0.5) without External Adjustment Using Internal Resistors to Set m

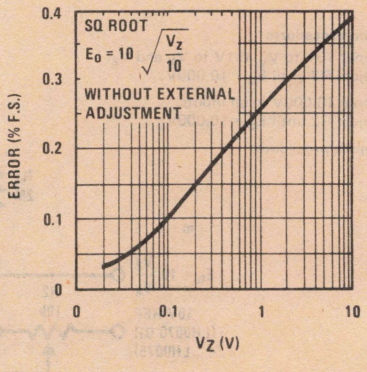

FIGURE 8b. Typical Performance Curve Square Root, No External Adjustment

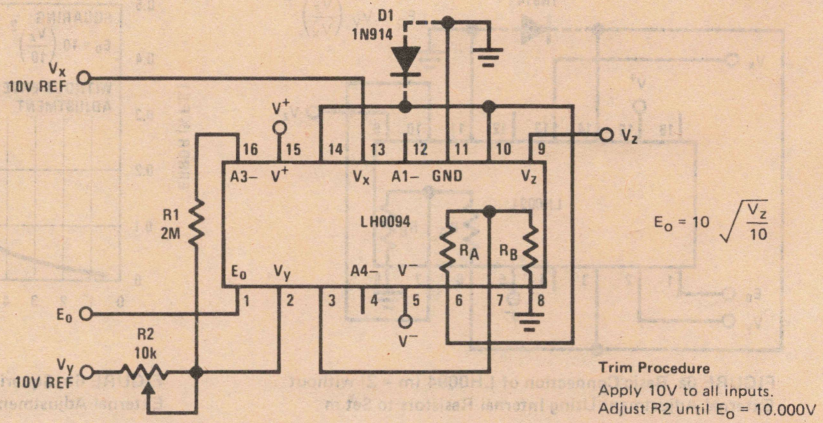

FIGURE 9. Precision Square Rooter (0.15% Typ)

Applications Information (Continued)

6. LOW LEVEL SQUARE ROOT

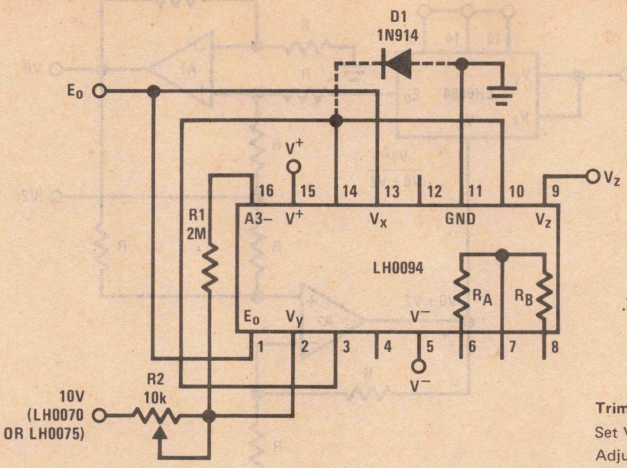

$m = 1$

$E_o = 10 \frac{V_z}{E_o}$

$E_o^2 = 10\ V_z$

$\therefore E_o = \sqrt{10\ V_z}$

$5\ mV \leq V_z \leq 10V$

Trim Procedure

Set $V_z = 10V$

Adjust R2 until output = 10.000V

FIGURE 10. 3-Decade Precision Square Root Circuit Using the LH0094 with m = 1

Typical Applications

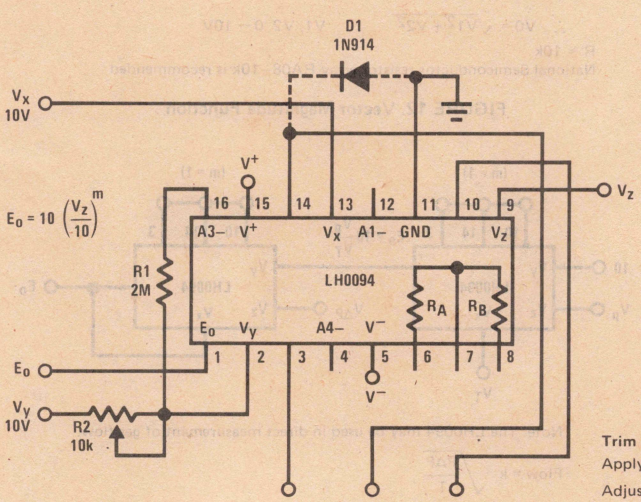

$E_o = 10 \left(\frac{V_z}{10}\right)^m$

$E_o = 10 \left(\frac{V_z}{10}\right)^m$

Trim Procedure

Apply 10V to all inputs

Adjust R2 for output of 10.000V

For m = 0.2

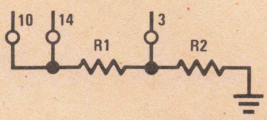

$m = \frac{R2}{R1 + R2}$; Choose R1 = 200Ω

∴ R2 = 50Ω

For m = 5

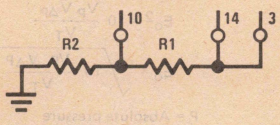

$m = \frac{R1 + R2}{R2}$; Choose R2 = 50Ω

∴ R1 = 200Ω

FIGURE 11. Precision Exponentiator (m = 0.2 to 5)

Typical Applications (Continued)

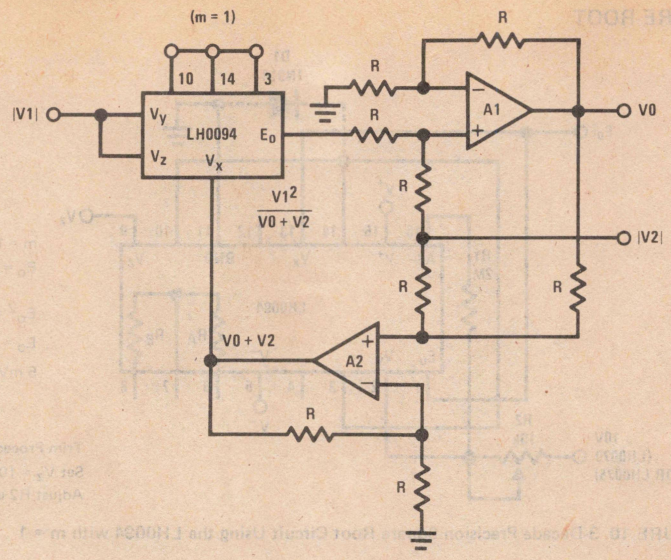

Note. The LH0094 may be used to generate a voltage equivalent to:

$$V0 = \sqrt{V1^2 + V2^2}$$

$$V0 = V2 + \frac{V1^2}{V0 + V2}$$

$$V0^2 + V0\ V2 = V2\ V0 + V2^2 + V1^2$$

$$V0^2 = V1^2 + V2^2$$

$$\therefore\ V0 = \sqrt{V1^2 + V2^2} \qquad V1, V2\ 0 \rightarrow 10V$$

R ≈ 10k

National Semiconductor resistor array RA08–10k is recommended

FIGURE 12. Vector Magnitude Function

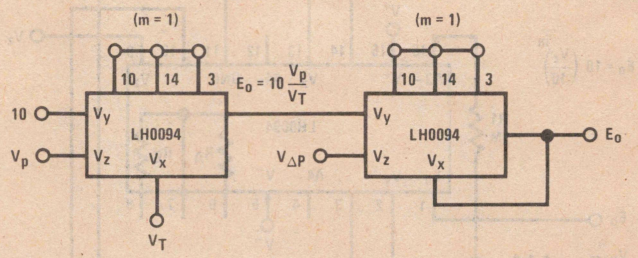

Note. The LH0094 may be used in direct measurement of gas flow.

$$\text{Flow} = k\sqrt{\frac{P\Delta P}{T}}$$

$$E_o = 10\ \frac{V_P}{V_T} \times \frac{V_{\Delta P}}{E_o}$$

$$E_o^2 = 10\ \frac{V_P\ V_{\Delta P}}{V_T}$$

$$E_o = \sqrt{10\ \frac{V_P\ V_{\Delta P}}{V_T}}$$

P = Absolute pressure
T = Absolute temperature
ΔP = Pressure drop

FIGURE 13. Mass Gas Flow Circuit

Typical Applications (Continued)

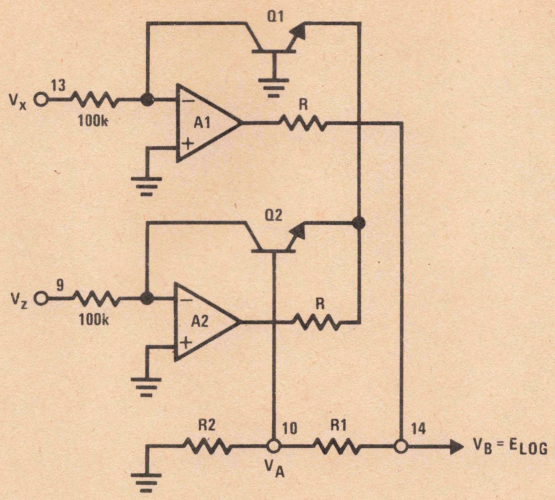

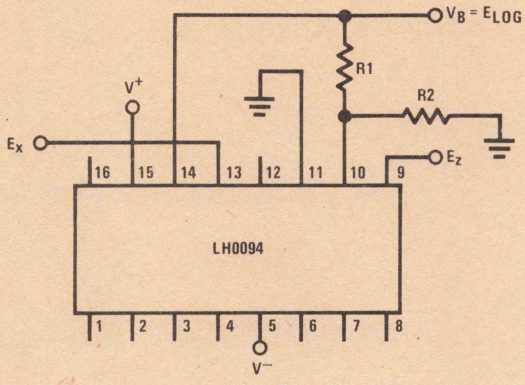

Note. The LH0094 may also be used to generate the Log of a ratio of 2 voltages. The output is taken from pin 14 of the LH0094 for the Log application.

$$E_{LOG} = K1 \frac{KT}{q} \ln \frac{V_z}{V_x}$$

$$\text{where } K1 = \frac{R1 + R2}{R2}$$

$$\text{If } K1 = \frac{1}{KT/q \ln 10}$$

$$\text{then } E_{LOG} = \text{Log}_{10} \frac{V_z}{V_x}$$

$R1 = 15.9\ R2$
$R2 \approx 400\Omega$

R2 must be a thermistor with a tempco of $\approx$ 0.33%/°C to be compensated over temperature.

FIGURE 14. Log Amp Application

Typical Applications (Continued)

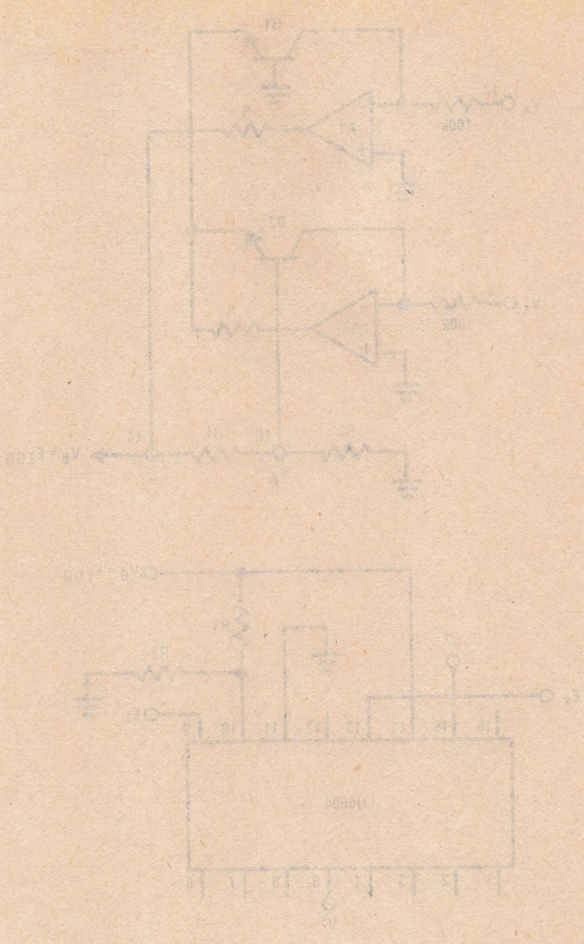

Note: The LH0024 may also be used to generate the Log of a ratio of 2 voltages. The output is taken from pin 14 of the LH0024 from a 2 amplifier stage.

$$E_{LOG} = \frac{kT}{q} \ln \frac{V_a}{V_b}$$

where $k = \frac{R1 + R2}{R2}$

$$q = \frac{1}{(1.6 \times 10^{-19})}$$

then $E_{LOG} = 1.3010 \frac{V_a}{V_b}$

$R1 = 16.4\ R2$
$R2 = 100\Omega$

HP recommends an 8 Ohm pot with a tempco of ≈ 0.39%/°C to compensate for curve temperature.

FIGURE 16. Log Amp Application

Section 7

Precision Voltage Regulators and References

7

Section 7. Precision References and Regulators

Function	Features	Line Reg	Load Reg	I_{OUT} (mA)	V_{OUT} Toler. @25°C (Max)	Drift (Max)	Part Number −55°C to 125°C	Part Number −25°C to 85°C	Page Number
Positive Programmable Voltage Regulator	Internal programming resistors, adjustable current limit, V_{OUT} = 5, 6, 8, 10, 12, 15, 18V	0.008%	0.055%	0.1–200	0.5% 1%		LH0075	LH0075C	7-8
Negative Programmable Voltage Regulator					0.5% 1%		LH0076	LH0075C	7-13
10.000V Precision BCD Reference	Three-terminal buffered zener reference, 0.1Ω output, 12.5 to 40V input, 100μV p-p noise	0.02% 0.02% 0.02%	0.01% 0.02% 0.02%	0–5	0.1% 0.1% 0.05%	20mV* 10mV 4mV	LH0070-0 LH0070-1 LH0070-2		7-4
10.024V Precision Binary Reference		0.02% 0.02% 0.02%	0.01% 0.02% 0.02%	0–5	0.1% 0.1% 0.05%	20mV* 10mV 4mV	LH0071-0 LH0071-1 LH0071-2		7-4
6.95V Temperature Stabilized Reference	Thermostated two-terminal zener, 0.5Ω low noise		0.1%	0.5–10	+1%, −2%	15mV 1mV	LM199A	LM299A	7-23
6.9V Reference	Low noise subsurface zener, 0.8Ω			6–15	5%	7 to 35mV	LM129		7-18

*These specifications apply for −25°C to +85°C.

Note: Refer to the *Linear Databook* for information on other regulators and references.

National Semiconductor

Voltage References and Regulators

LH0070 Series Precision BCD Buffered Reference
LH0071 Series Precision Binary Buffered Reference

General Description

The LH0070 and LH0071 are precision, three terminal, voltage references consisting of a temperature compensated zener diode driven by a current regulator and a buffer amplifier. The devices provide an accurate reference that is virtually independent of input voltage, load current, temperature and time. The LH0070 has a 10.000V nominal output to provide equal step sizes in BCD applications. The LH0071 has a 10.240V nominal output to provide equal step sizes in binary applications.

The output voltage is established by trimming ultra-stable, low temperature drift, thin film resistors under actual operating circuit conditions. The devices are short-circuit proof in both the current sourcing and sinking directions.

The LH0070 and LH0071 series combine excellent long term stability, ease of application, and low cost, making them ideal choices as reference voltages in precision D to A and A to D systems.

Features

- Accurate output voltage
  - LH0070 — 10V ±0.01%
  - LH0071 — 10.24V ±0.01%
- Single supply operation — 12.5V to 40V
- Low output impedance — 0.1Ω
- Excellent line regulation — 0.1 mV/V
- Low zener noise — 100 μVp-p
- 3-lead TO-5 (pin compatible with the LM109)
- Short circuit proof
- Low standby current — 3 mA

Equivalent Schematic

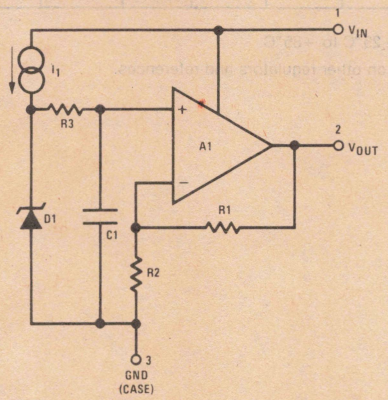

Connection Diagram

TO-5 Metal Can Package

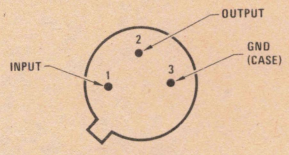

BOTTOM VIEW

Order Number LH0070-0H, LH0071-0H, LH0070-1H, LH0071-1H, LH0070-2H or LH0071-2H
See NS Package H03B

Typical Applications

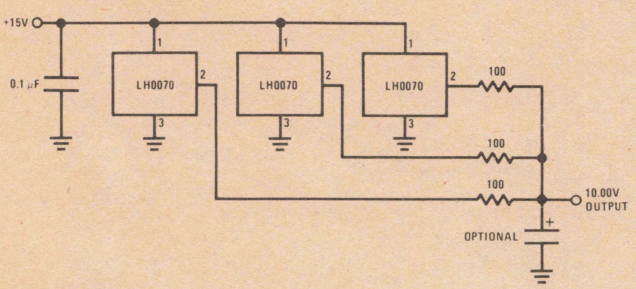

Statistical Voltage Standard

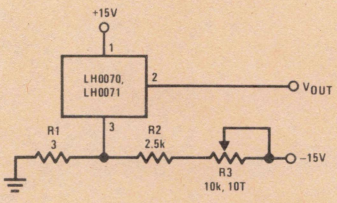

*Note. The output of the LH0070 and LH0071 may be adjusted to a precise voltage by using the above circuit since the supply current of the devices is relatively small and constant with temperature and input voltage. For the circuit shown, supply sensitivities are degraded slightly to 0.01%/V change in V_{OUT} for changes in V_{IN} and V^-.

An additional temperature drift of 0.0001%/°C is added due to the variation of supply current with temperature of the LH0070 and LH0071. Sensitivity to the value of R1, R2 and R3 is less than 0.001%/%.

***Output Voltage Fine Adjustment**

Absolute Maximum Ratings

Supply Voltage	40V
Power Dissipation (See Curve)	600 mW
Short Circuit Duration	Continuous
Output Current	±20 mA
Operating Temperature Range	−55°C to +125°C
Storage Temperature Range	−65°C to +150°C
Lead Temperature (Soldering, 10 seconds)	300°C

Electrical Characteristics (Note 1)

PARAMETER	CONDITIONS	MIN	TYP	MAX	UNITS
Output Voltage	$T_A = 25°C$				
LH0070			10.000		V
LH0071			10.240		V
Output Accuracy	$T_A = 25°C$				
−0, −1			±0.03	±0.1	%
−2			±0.02	±0.05	%
Output Accuracy	$T_A = -55°C, 125°C$				
−0, −1				±0.3	%
−2				±0.2	%
Output Voltage Change With Temperature	(Note 2)				
−0				± 0.2	%
−1			±0.02	± 0.1	%
−2			±0.01	±0.04	%
Line Regulation	$13V \leq V_{IN} \leq 33V, T_C = 25°C$				
−0, −1			0.02	0.1	%
−2			0.01	0.03	%
Input Voltage Range		12.5		40	V
Load Regulation	$0\ mA \leq I_{OUT} \leq 5\ mA$		0.01	0.03	%
Quiescent Current	$13V \leq V_{IN} \leq 33V, I_{OUT} = 0\ mA$	1	3	5	mA
Change In Quiescent Current	$\Delta V_{IN} = 20V$ From 13V To 33V		0.75	1.5	mA
Output Noise Voltage	BW = 0.1 Hz To 10 Hz, $T_A = 25°C$		20		μVp-p
Ripple Rejection	f = 120 Hz		0.01		%/Vp-p
Output Resistance			0.2	1	Ω
Long Term Stability	$T_A = 25°C$, (Note 3)				
−0, −1				±0.2	%/yr.
−2				±0.05	%/yr.

Note 1: Unless otherwise specified, these specifications apply for $V_{IN} = 15.0V$, $R_L = 10\ k\Omega$, and over the temperature range of $-55°C \leq T_A \leq +125°C$.

Note 2: This specification is the difference in output voltage measured at $T_A = 85°C$ and $T_A = 25°C$ or $T_A = 25°C$ and $T_A = -25°C$ with readings taken after test chamber and device-under-test stabilization at temperature using a suitable precision voltmeter.

Note 3: This parameter is guaranteed by design and not tested.

Typical Performance Characteristics

Maximum Power Dissipation

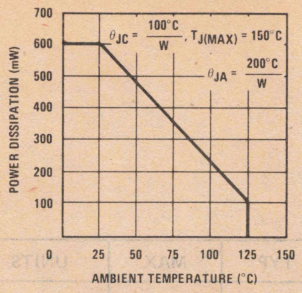

Quiescent Current vs Input Voltage

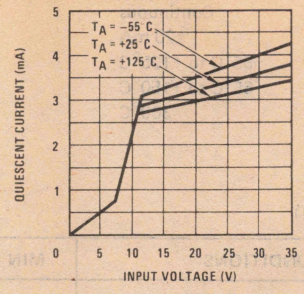

Normalized Output Voltage vs Temperature

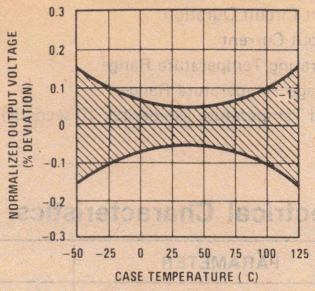

Step Load Response

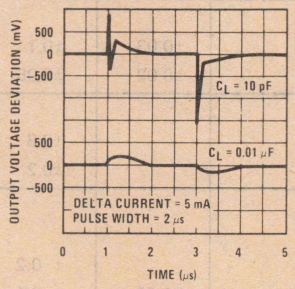

Output Short Circuit Characteristics

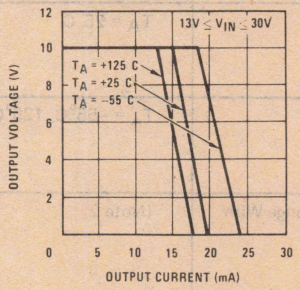

Noise Voltage

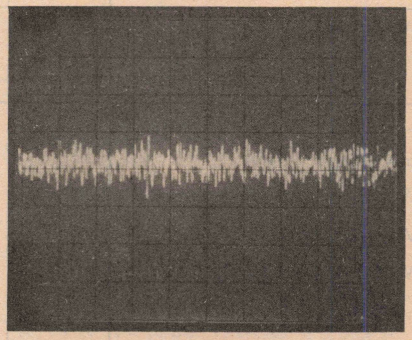

BW = 0.1 Hz TO 10 Hz

Typical Applications (Continued)

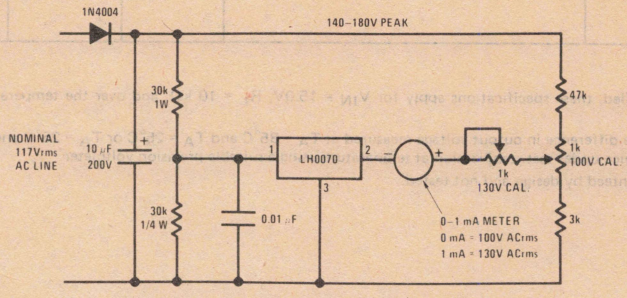

Expanded Scale AC Voltmeter

Typical Applications (Continued)

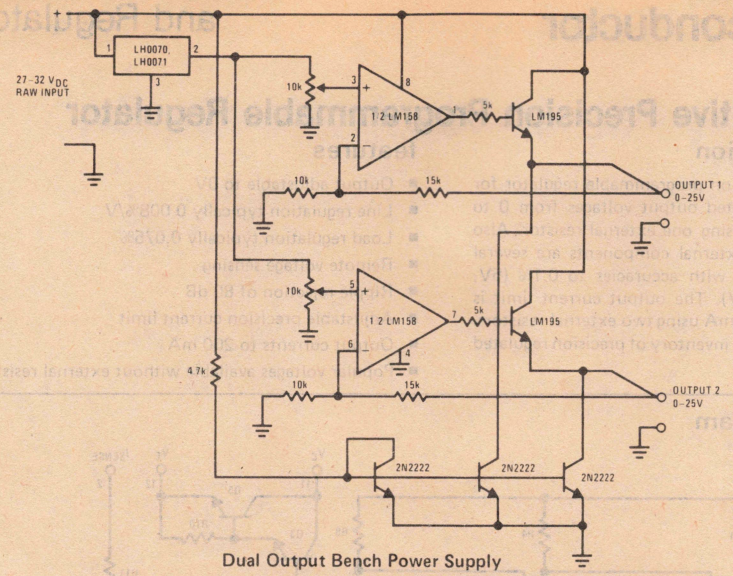

Dual Output Bench Power Supply

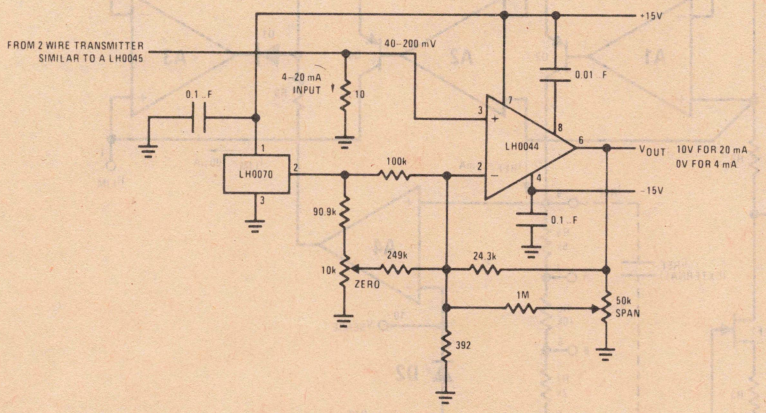

Precision Process Control Interface

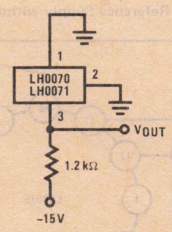

Negetive 10V Reference

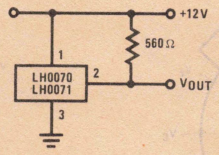

Boosted Reference For Low Input Voltages

National Semiconductor

LH0075 Positive Precision Programmable Regulator

general description

The LH0075 is a precision programmable regulator for positive voltages. Regulated output voltages from 0 to 27V may be obtained using one external resistor. Also available without any external components are several fixed regulated voltages with accuracies to 0.1% (5V, 6V, 10V, 12V and 15V). The output current limit is adjustable from 0 to 200 mA using two external resistors. These features provide an inventory of precision regulated values in one package.

features

- Output adjustable to 0V
- Line regulation typically 0.008%/V
- Load regulation typically 0.075%
- Remote voltage sensing
- Ripple rejection of 80 dB
- Adjustable precision current limit
- Output currents to 200 mA
- Popular voltages available without external resistors

schematic diagram

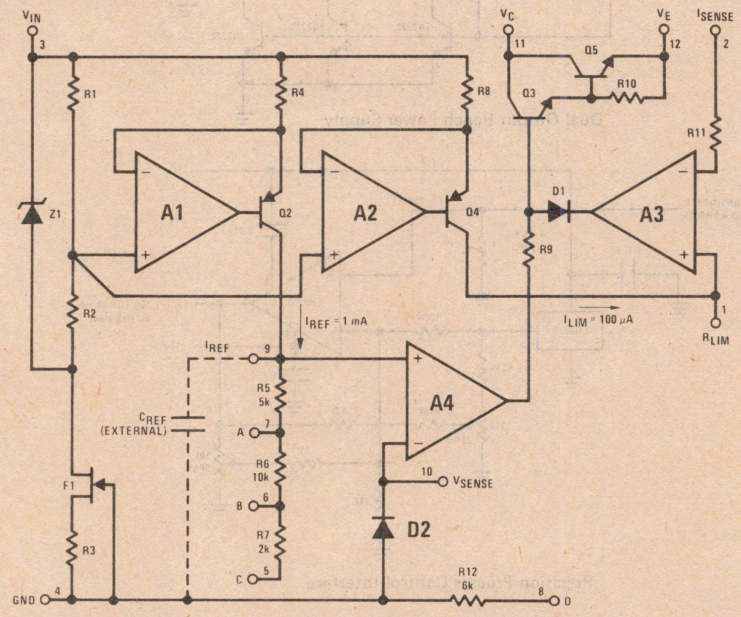

connection diagram

TO-8 Metal Can Package

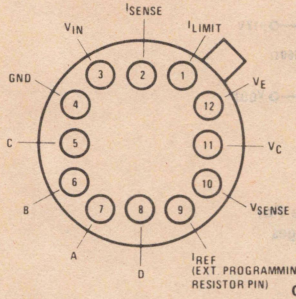

Case is electrically isolated

Order Number
LH0075G
LH0075CG
See Package H12B

typical applications

Precision 15V Reference Supply without Current Limit

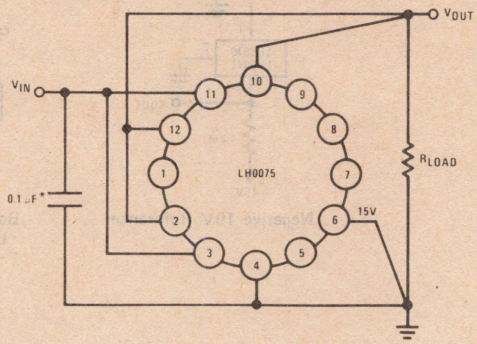

*Needed if device is far from filter capacitors

absolute maximum ratings

Input Voltage	32V
Output Voltage	27V
Output Current	200 mA
Power Dissipation	See Curve
Operating Temperature Range	T_{MIN} T_{MAX}
LH0075	−55°C to +125°C
LH0075C	0°C to +70°C
Storage Temperature	−65°C to +150°C
Lead Temperature (Soldering, 10 seconds)	300°C

electrical characteristics Unless otherwise specified conditions are for $T_{MIN} \leq T_A \leq T_{MAX}$

PARAMETER	CONDITIONS	LH0075			LH0075C			UNITS
		MIN	TYP	MAX	MIN	TYP	MAX	
Line Regulation	T_A = 25°C		0.008	0.02		0.008	0.04	%/V
Load Regulation	T_A = 25°C, 1 mA < I_{LOAD} < 200 mA							
	$V_{OUT} \leq 5V$		2.5	7.5		2.5	15	mV
	$V_{OUT} \geq 5V$		0.055	0.15		0.055	0.3	%
Reference Current (I_{REF})	T_A = 25°C, V_{IN} = 15V	0.998	1.000	1.002	0.995	1.00	1.005	mA
Load Regulation	1 mA < I_{LOAD} < 200 mA							
	$V_{OUT} \leq 5V$		4	15		4	25	mV
	$V_{OUT} \geq 5V$		0.075	0.3		0.075	0.5	%
Reference Current Drift ($\Delta I_{REF}/\Delta Temp$)	V_{IN} = 15V		−0.0065			−0.0065		%/°C
Minimum Load Current (I_{LIM})	(Note 1)	98	100	102	95	100	105	μA
Output Voltage Range		0		27	0		27	V
Minimum Input Voltage		8			8			V
Input–Output Differential Voltage	T_A = 25°C, 1 mA < I_{LOAD} < 200 mA		3.0	3.2		3.0	3.5	V
Quiescent Supply Current			6	6.5		6.5	8	mA
Ripple Rejection	V_{OUT} = 5V, f = 120 Hz		65			65		dB
	C_{REF} = 2.2 μF		80			80		dB
Initial Output Voltage Tolerance	(Note 2)		±0.1	±0.5		±0.1	±1.0	%
Output Voltage Change with Temperature ($\Delta V_{OUT}/\Delta Temp$)	(Note 3)		0.003			0.003		%/°C

Note 1: Minimum load current is established by I_{LIM}, the current from Q4. (See schematic). I_{LIM} goes directly to the output if the current limit feature is used.

Note 2: For V_{IN} = 15V and V_{OUT} obtained by using R5, R6, R7 and R12 individually.

Note 3: Total change over specified temperature range.

typical performance characteristics

Maximum Power Dissipation

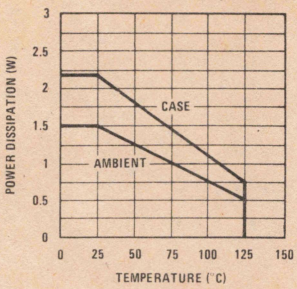

Reference Current Change with Temperature (Normalized)

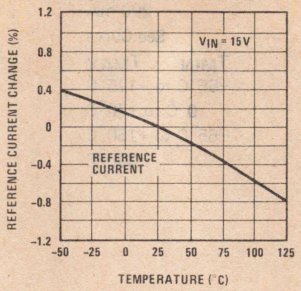

Temperature Stability

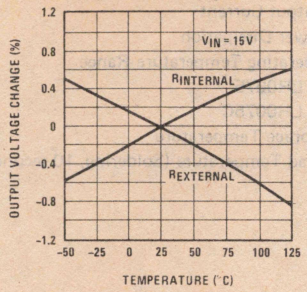

Output Voltage Change with Temperature (Normalized)

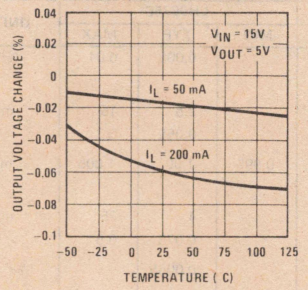

Current Limit

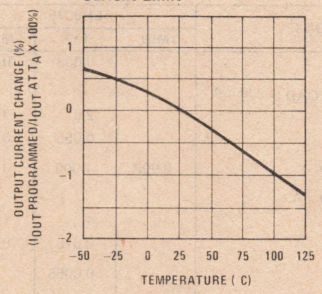

Input–Output Differential Voltage

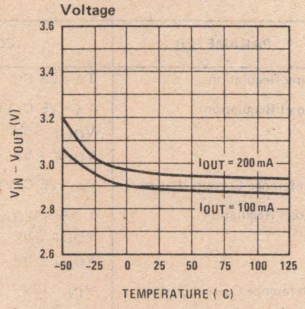

Load Transient Response (Voltage Mode)

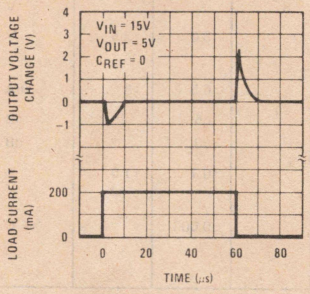

Load Transient Response (Current Mode)

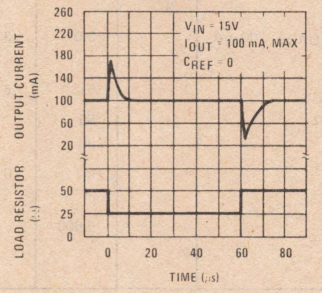

Ripple Rejection

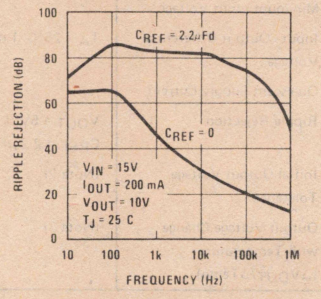

Line Transient Response

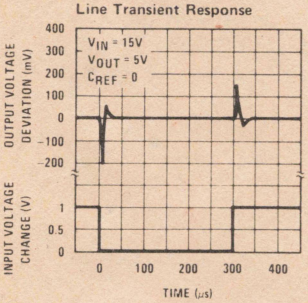

Line Transient Response

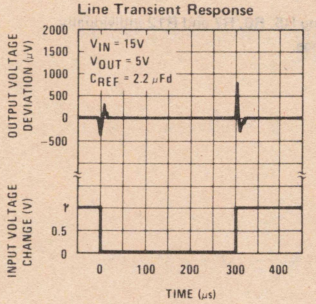

Output Impedance

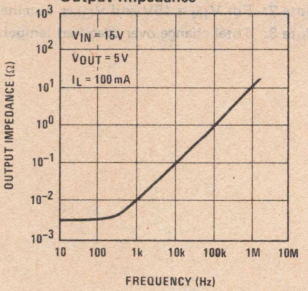

typical applications (Continued)

2A Regulator with Current Limit

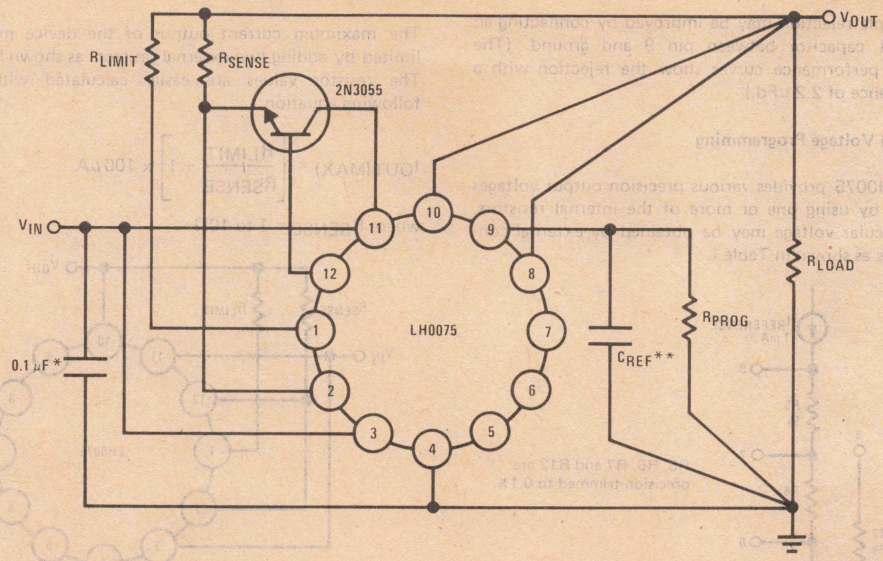

Variable Voltage Reference with Current Limit

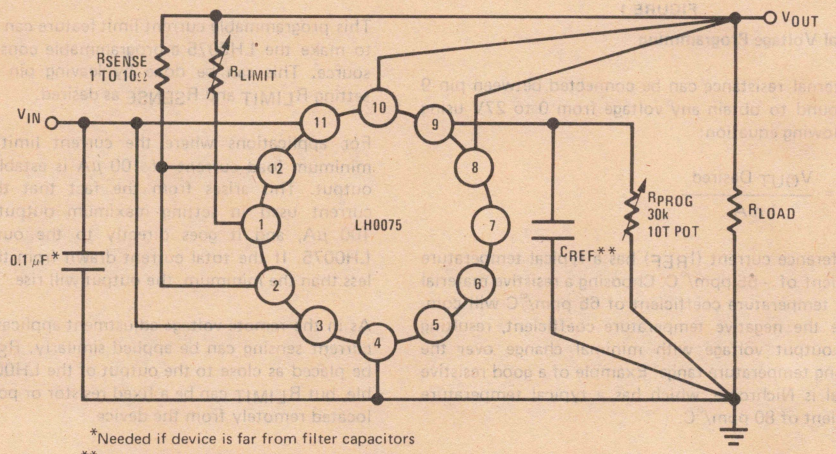

*Needed if device is far from filter capacitors

**Optional—improves transient response

$$R_{PROG} = \frac{V_{OUT}\ \text{Desired}}{1\ \text{mA}} \qquad I_{OUT(MAX)} = \left[\frac{R_{LIMIT}}{R_{SENSE}} + 1\right] \times 100\,\mu A$$

$$I_{OUT} \leq 200\ \text{mA}$$

applications information

The LH0075 does not require capacitors for stable operation, but an input bypass is recommended if device is far from filter capacitors. A 0.1 μF for input bypassing should be adequate for almost all applications.

applications information (Continued)

DESCRIPTION OF OPTIONS

Ripple Rejection Compensation. (Increases Ripple Rejection Typically to 80 dB)

The ripple rejection may be improved by connecting an external capacitor between pin 9 and ground. (The typical performance curves show the rejection with a capacitance of 2.2 μFd.)

Internal Voltage Programming

The LH0075 provides various precision output voltages simply by using one or more of the internal resistors. A particular voltage may be obtained by external connections as shown in Table I.

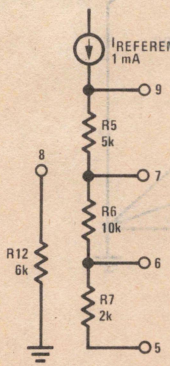

R5, R6, R7 and R12 are precision-trimmed to 0.1%.

FIGURE 1

External Voltage Programming

An external resistance can be connected between pin 9 and ground to obtain any voltage from 0 to 27V using the following equation:

$$R_{EXT} = \frac{V_{OUT}\ \text{Desired}}{1\ \text{mA}}$$

The reference current (I_{REF}) has a typical temperature coefficient of −65 ppm/°C. Choosing a resistive material with a temperature coefficient of 65 ppm/°C will compensate the negative temperature coefficient, resulting in an output voltage with minimal change over the operating temperature range. Example of a good resistive material is Nichrome, which has a typical temperature coefficient of 80 ppm/°C.

Since a current source is used as a reference, this makes remote voltage programming possible.

Current Limit Programming

The maximum current output of the device may be limited by adding two external resistors as shown below. The resistor values are easily calculated with the following equation:

$$I_{OUT(MAX)} = \left[\frac{R_{LIMIT}}{R_{SENSE}} + 1\right] \times 100\,\mu A$$

where R_{SENSE} = 1 to 10Ω

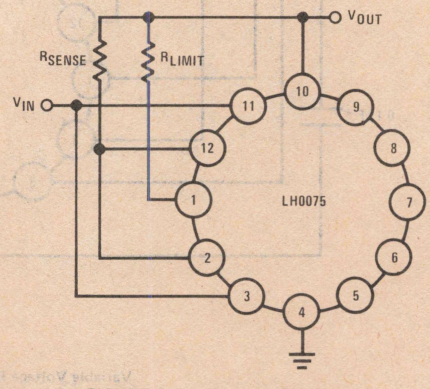

FIGURE 2. Current Limit Programming

This programmable current limit feature can be extended to make the LH0075 a programmable constant current source. This can be done by leaving pin 9 open and setting R_{LIMIT} and R_{SENSE} as desired.

For applications where the current limit is used, a minimum load current of 100 μA is established at the output. This arises from the fact that the constant current used in setting maximum output current is 100 μA, and it goes directly to the output of the LH0075. If the total current drawn from the output is less than the minimum, the output will rise.

As in the remote voltage adjustment application, remote current sensing can be applied similarly. R_{SENSE} must be placed as close to the output of the LH0075 as possible, but R_{LIMIT} can be a fixed resistor or potentiometer located remotely from the device.

TABLE I. Connection Scheme for Internal Available Output Voltages

OUTPUT VOLTAGE (V)	PIN 5	PIN 6	PIN 7	PIN 8	PIN 9
5			Gnd		
6				•	•
8	•	•	•	•	•
10		Gnd	•	•	•
12	Gnd		•	•	•
15		Gnd			
18	•		•	•	•

National Semiconductor

Voltage References and Regulators

LH0076 Negative Precision Programmable Regulator

General Description

The LH0076 is a precision programmable regulator for negative voltages. Regulated output voltages from 0 to −27V may be obtained by using 1 external resistor. Also available without any external components are several fixed regulated voltages with accuracies to 0.1% (−3V, −5V, −6V, −8V, −9V, −12V, −15V and −18V). The output current limit is adjustable from 0 to 200 mA using 2 external resistors. These features provide an inventory of precision regulated values in 1 package.

Features

- Line regulation typically 0.005%/V
- Load regulation typically 0.02%
- Remote voltage sensing
- Ripple rejection−70 dB
- Output Adjustable to 0V
- Adjustable precision current limit
- Output current to 200 mA

Schematic Diagram

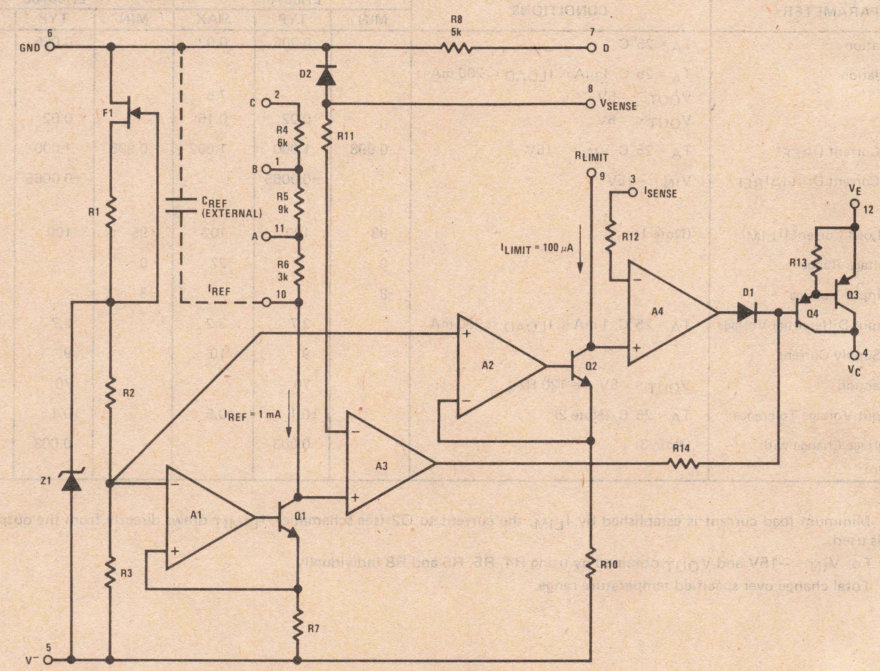

Connection Diagram

Metal Can Package

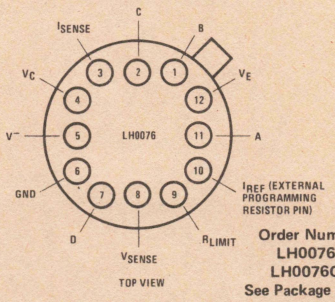

Order Number
LH0076G
LH0076CG
See Package H12B

Case is electrically isolated

Typical Application

Precision − 15V Reference Supply without Current Limit

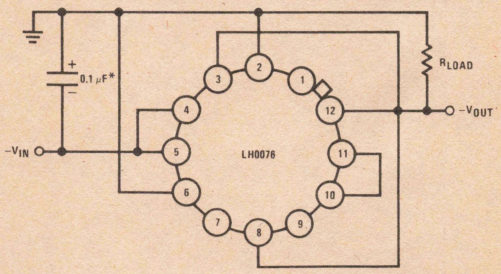

*Recommended if device is far from filter capacitors

Absolute Maximum Ratings

Input Voltage	−32V
Output Voltage	−27V
Output Current	200 mA
Power Dissipation	See Curve
Operating Temperature	
LH0076	−55°C to +125°C
LH0076C	−25°C to +85°C
Storage Temperature	−65°C to +150°C
Lead Temperature (Soldering, 10 seconds)	300°C

Electrical Characteristics

Conditions are for $T_{MIN} \leq T_A \leq T_{MAX}$ unless otherwise specified.

PARAMETER	CONDITIONS	LH0076			LH0076C			UNITS
		MIN	TYP	MAX	MIN	TYP	MAX	
Line Regulation	$T_A = 25°C$		0.005	0.02		0.005	0.04	%/V
Load Regulation	$T_A = 25°C$, 1 mA < I_{LOAD} < 200 mA							
	$V_{OUT} \geq -5V$			7.5			15	mV
	$V_{OUT} \leq -5V$		0.02	0.15		0.02	0.3	%
Reference Current (I_{REF})	$T_A = 25°C$, $V_{IN} = -15V$	0.998	1.000	1.002	0.995	1.000	1.005	mA
Reference Current Drift ($\Delta I_{REF}/\Delta Temp$)	$V_{IN} = -15V$		−0.0065			−0.0065		%/°C
Minimum Load Current (I_{LIM})	(Note 1)	98	100	102	95	100	105	μA
Output Voltage Range		0		−27	0		−27	V
Minimum Input Voltage		−8			−8			V
Input–Output Differential Voltage	$T_A = 25°C$, 1 mA < I_{LOAD} < 200 mA		2.7	3.2		2.7	3.5	V
Quiescent Supply Current			9	10		9	11	mA
Ripple Rejection	$V_{OUT} = -5V$, f = 120 Hz		70			70		dB
Initial Output Voltage Tolerance	$T_A = 25°C$, (Note 2)		±0.1	±0.5		±0.1	±1.0	%
Output Voltage Change with Temperature	(Note 3)		0.003			0.003		%/°C

Note 1: Minimum load current is established by I_{LIM}, the current to Q2 (see schematic). I_{LIMIT} draws directly from the output if current limit feature is used.

Note 2: For $V_{IN} = -15V$ and V_{OUT} obtained by using R4, R5, R6 and R8 individually.

Note 3: Total change over specified temperature range.

Typical Performance Characteristics

Maximum Power Dissipation

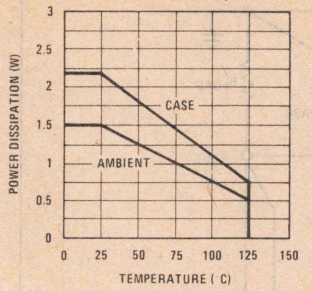

Reference Current Change with Temperature (Normalized)

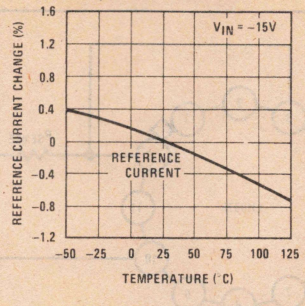

Temperature Stability

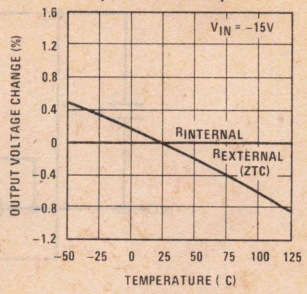

Output Voltage Change with Temperature (Normalized)

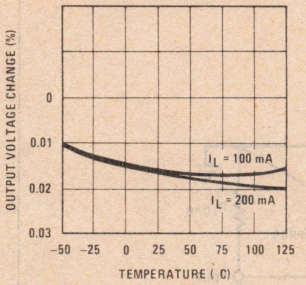

Current Limit

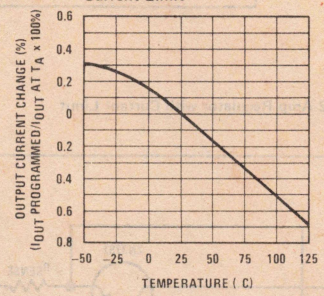

Input-Output Differential Voltage

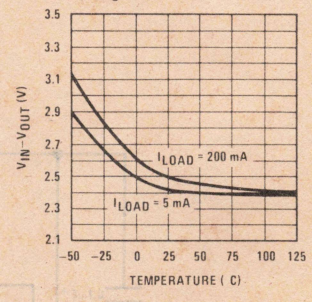

Load Transient Response (Voltage Mode)

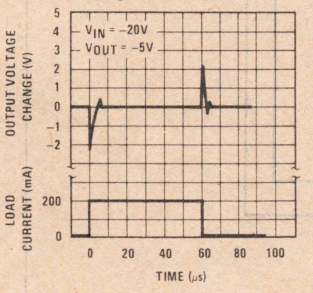

Load Transient Response (Current Mode)

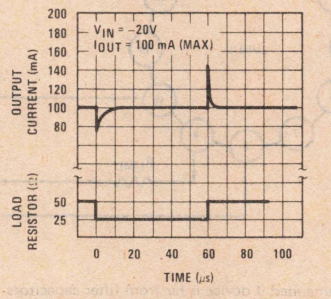

Line Transient Response

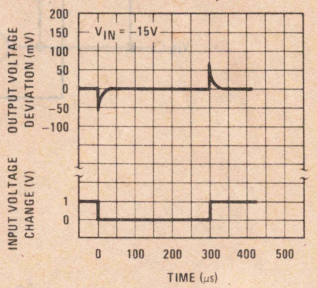

Quiescent Input Current

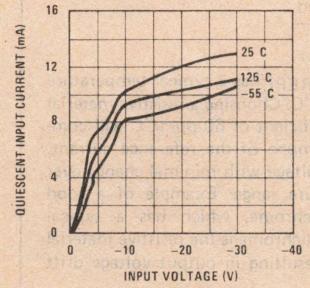

Ripple Rejection

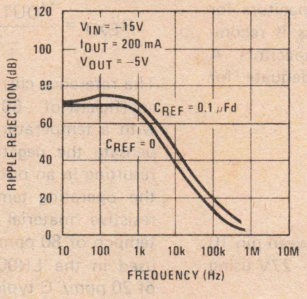

Output Impedance

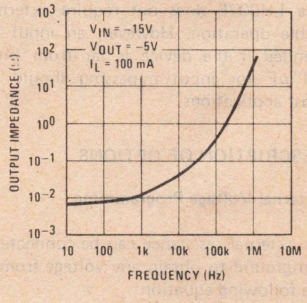

Typical Application (Continued)

Variable Voltage Reference with Current Limit

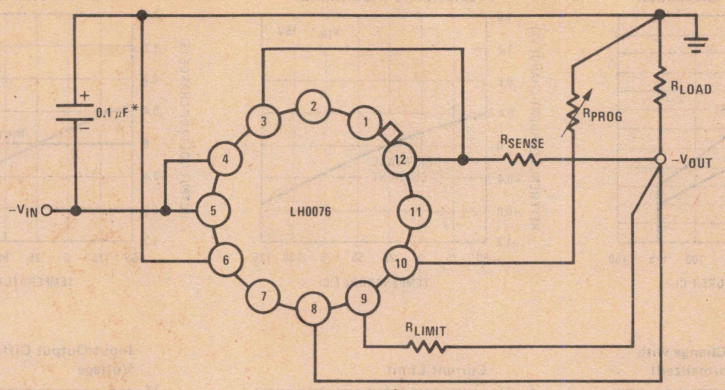

2-Amp Regulator with Current Limit

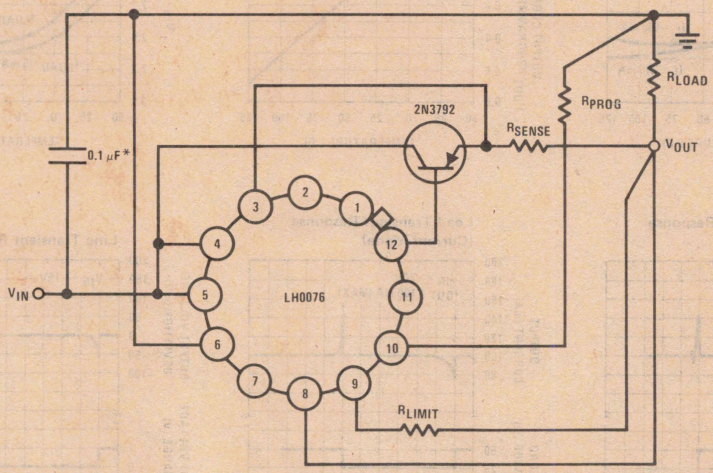

*Recommended if device is far from filter capacitors

Application Information

The LH0076 does not require external capacitors for stable operation. However, an input bypass is recommended if the device is far from filter capacitors. A 0.1 μF for input bypassing should be adequate for most applications.

DESCRIPTION OF OPTIONS

External Voltage Programming

An external resistance can be connected between pin 10 and ground to obtain any voltage from 0 to −27V using the following equation:

$$R_{EXT} = \frac{V_{OUT}\ \text{desired}}{-1\ \text{mA}}$$

The reference current (I_{REF}) has a typical temperature coefficient of −60 ppm/°C. Choosing a resistive material with a temperature coefficient of 60 ppm/°C will compensate the negative tempco of the reference current, resulting in an output voltage with minimal change over the operating temperature range. Example of a good resistive material is nichrome, which has a typical tempco of 80 ppm/°C. Nichrome is the resistive material used in the LH0076, resulting in output voltage drift of 20 ppm/°C typically.

Application Information (Continued)

Because a current source is used as a reference, remote voltage programming is possible.

Internal Voltage Programming

The LH0076 provides various precision output voltages simply by using 1 or more of the internal programming resistors. These voltages may be obtained by using the connections as shown in Table I.

R_{TOTAL} is the total resistance between pin 10 and ground

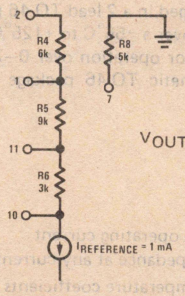

$V_{OUT} = I_{REF} \times (R_{TOTAL})$

R4, R5, R6 and R8 are precision trimmed to 0.1%

FIGURE 1

Current Limit Programming

The maximum current output of the device may be limited by adding 2 external resistors as shown in *Figure 2*. The resistor values are calculated using the following equation:

$$I_{OUT(MAX)} = \left[\frac{R_{LIMIT}}{R_{SENSE}} + 1\right] \times 100\,\mu A$$

where R_{SENSE} = 1 to 10Ω

This programming current limit feature can be extended to make the LH0076 a programmable current sink. This can be done by leaving pin 10 open and setting R_{LIMIT} and R_{SENSE} as desired. (See *Figure 3*).

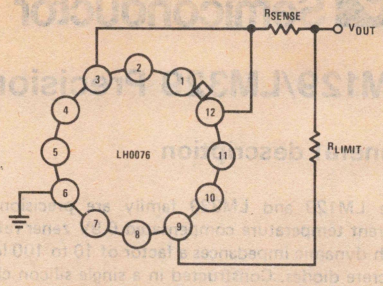

FIGURE 2. Current Limit Programming

For applications where the current limit is used, a minimum load current of 100 μA is established at the output. This arises from the fact that the constant current used in setting maximum output current is 100 μA, and it comes directly from the output of the LH0076. If the total load current is less than this minimum current, the output will drop.

As in the remote voltage adjustment application, remote current sensing can be applied similarly. R_{SENSE} should be placed as close to the output of the LH0076 as possible, but R_{LIMIT} can be a resistor or potentiometer located remotely from the device.

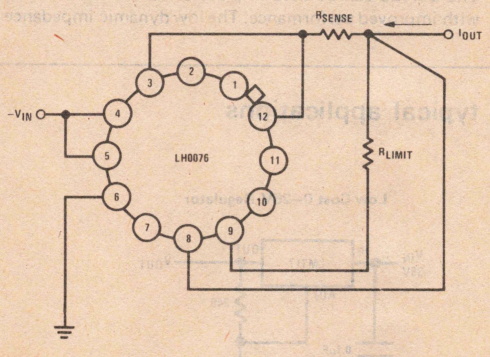

FIGURE 3. Precision Current Sink

TABLE I. Connection Scheme for Internally Available Output Voltages

OUTPUT VOLTAGE (V)	PIN 1	PIN 2	PIN 7	PIN 10	PIN 11
−3					Gnd
−5			•	•	
−6	•	Gnd		•	
−8			•	•	•
−9	Gnd			•	•
−12	Gnd				
−15		Gnd		•	•
−18		Gnd			

National Semiconductor

LM129/LM329 Precision Reference

general description

The LM129 and LM329 family are precision multi-current temperature compensated 6.9V zener references with dynamic impedances a factor of 10 to 100 less than discrete diodes. Constructed in a single silicon chip, the LM129 uses active circuitry to buffer the internal zener allowing the device to operate over a 0.5 mA to 15 mA range with virtually no change in performance. The LM129 and LM329 are available with selected temperature coefficients of 0.001, 0.002, 0.005 and 0.01%/°C. These new references also have excellent long term stability and low noise.

A new subsurface breakdown zener used in the LM129 gives lower noise and better long term stability than conventional IC zeners. Further the zener and temperature compensating transistor are made by a planar process so they are immune to problems that plague ordinary zeners. For example, there is virtually no voltage shifts in zener voltage due to temperature cycling and the device is insensitive to stress on the leads.

The LM129 can be used in place of conventional zeners with improved performance. The low dynamic impedance simplifies biasing and the wide operating current allows the replacement of many zener types.

The LM129 is packaged in a 2-lead TO-46 package and is rated for operation over a −55°C to +125°C temperature range. The LM329 for operation over 0–70°C is available in both a hermetic TO-46 package and a TO-92 epoxy package.

features

- 0.6 mA to 15 mA operating current
- 0.6Ω dynamic impedance at any current
- Available with temperature coefficients of 0.001%/°C
- 7μV wideband noise
- 5% initial tolerance
- 0.002% long term stability
- Low cost
- Subsurface zener

typical applications

Low Cost 0–25V Regulator

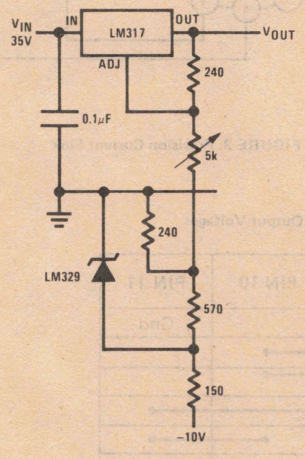

Simple Reference

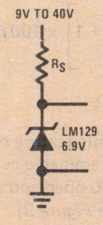

Adjustable Bipolar Output Reference

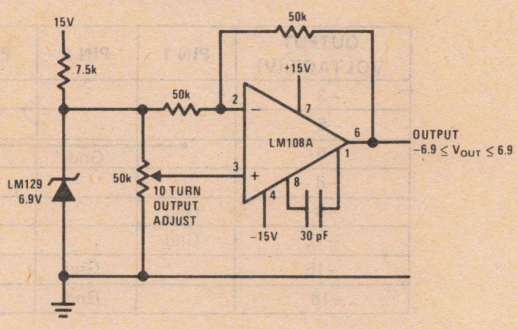

absolute maximum ratings

Reverse Breakdown Current	30 mA
Forward Current	2 mA
Operating Temperature Range	
LM129	−55°C to +125°C
LM329	0°C to +70°C
Storage Temperature Range	−55°C to +150°C
Lead Temperature (Soldering, 10 seconds)	300°C

electrical characteristics (Note 1)

PARAMETER	CONDITIONS	LM129A, B, C			LM329B, C, D			UNITS
		MIN	TYP	MAX	MIN	TYP	MAX	
Reverse Breakdown Voltage	$T_A = 25°C$, $0.6\ mA \leq I_R \leq 15\ mA$	6.7	6.9	7.2	6.6	6.9	7.25	V
Reverse Breakdown Change with Current	$T_A = 25°C$, $0.6\ mA \leq I_R \leq 15\ mA$		9	14		9	20	mV
Reverse Dynamic Impedance	$T_A = 25°C$, $I_R = 1\ mA$		0.6	1		0.8	2	Ω
RMS Noise	$T_A = 25°C$, $10\ Hz \leq F \leq 10\ kHz$		7	20		7	100	μV
Long Term Stability	$T_A = 45°C \pm 0.1°C$, $I_R = 1\ mA \pm 0.3\%$		20			20		ppm
Temperature Coefficient	$I_R = 1\ mA$							
LM129A			6	10				ppm/°C
LM129B, LM329B			15	20		15	20	ppm/°C
LM129C, LM329C			30	50		30	50	ppm/°C
LM329D						50	100	ppm/°C
Change In Reverse Breakdown Temperature Coefficient	$1\ mA \leq I_R \leq 15\ mA$		1			1		ppm/°C
Reverse Breakdown Change with Current	$1\ mA \leq I_R \leq 15\ mA$		12			12		mV
Reverse Dynamic Impedance	$1\ mA \leq I_R \leq 15\ mA$		0.8			1		Ω

Note 1: These specifications apply for $-55°C \leq T_A \leq +125°C$ for the LM129 and $0°C \leq T_A \leq +70°C$ for the LM329 unless otherwise specified. The maximum junction temperature for an LM129 is 150°C and LM329 is 100°C. For operating at elevated temperature, devices in TO-46 package must be derated based on a thermal resistance of 440°C/W junction to ambient or 80°C/W junction to case. For the TO-92 package, the derating is based on 180°C/W junction to ambient with 0.4" leads from a PC board and 160°C/W junction to ambient with 0.125" lead length to a PC board.

typical applications (con't)

0V to 20V Power Reference

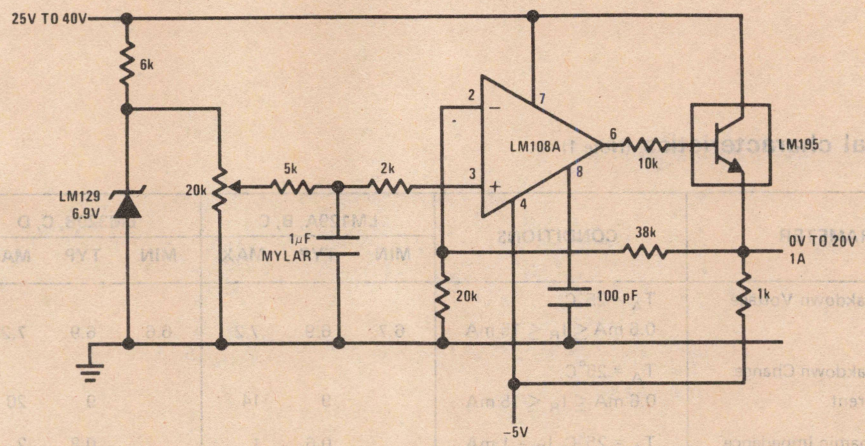

External Reference for Temperature Transducer

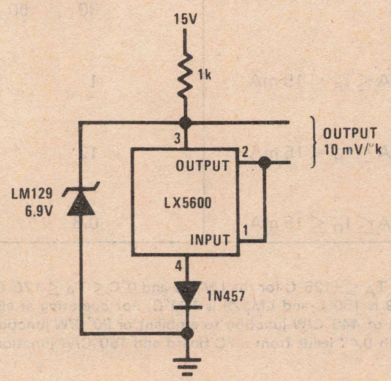

typical applications (con't)

Positive Current Source

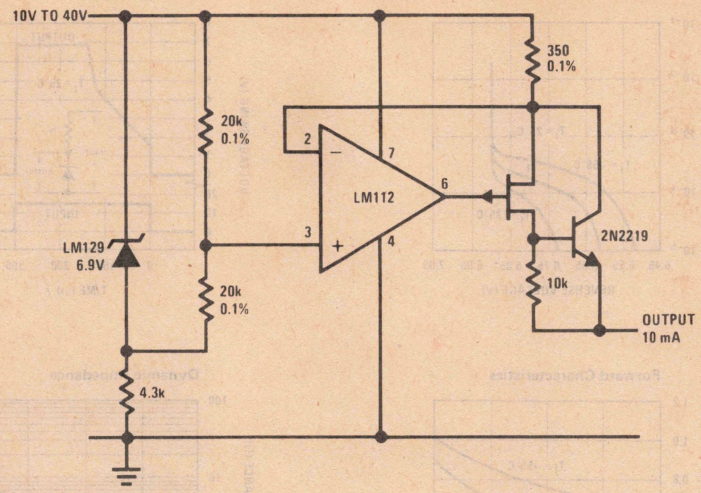

Buffered Reference with Single Supply

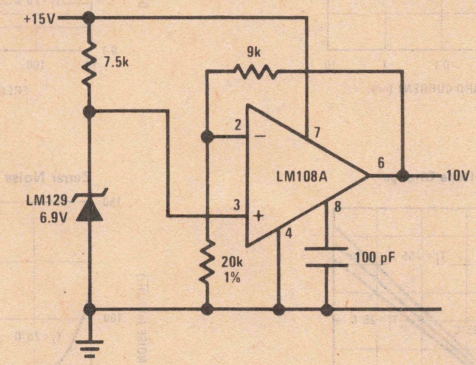

connection diagrams

Metal Can Package

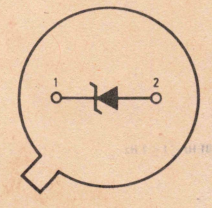

BOTTOM VIEW

Order Number LM129AH, LM129BH LM129CH, LM329BH, LM329CH or LM329DH
See NS Package H02A

Plastic Package

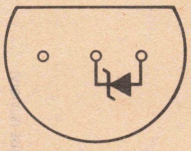

BOTTOM VIEW

Order Number LM329BZ, LM329CZ or LM329DZ
See NS Package Z03A

typical performance characteristics

Reverse Characteristics

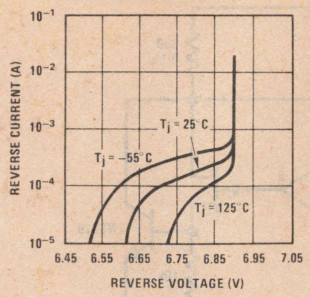

Response Time

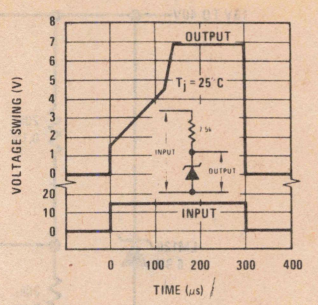

Forward Characteristics

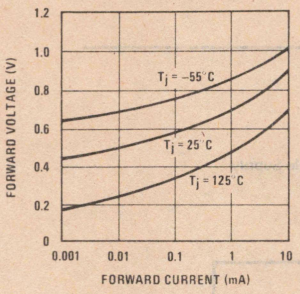

Dynamic Impedance

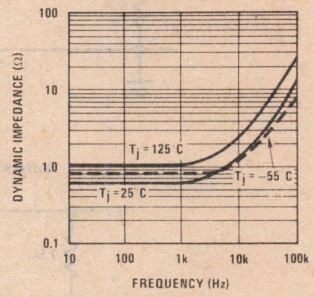

Reverse Voltage Change

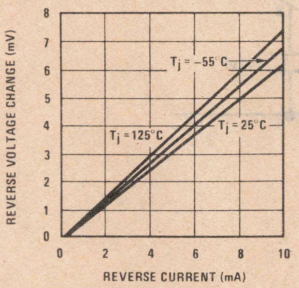

Zener Noise Voltage

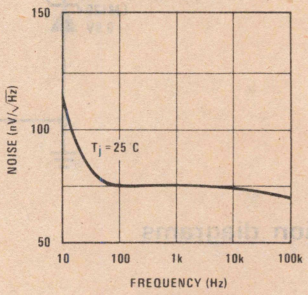

Low Frequency Noise Voltage

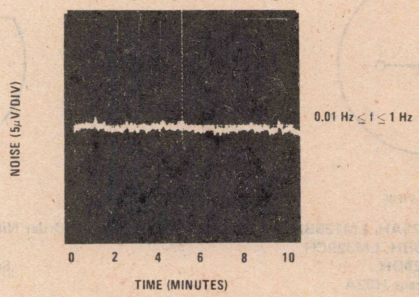

LM199A/LM299A/LM399A Precision Reference

general description

The LM199A/LM299A/LM399A are precision, temperature-stabilized monolithic zeners offering temperature coefficients a factor of ten better than high quality reference zeners. Constructed on a single monolithic chip is a temperature stabilizer circuit and an active reference zener. The active circuitry reduces the dynamic impedance of the zener to about 0.5Ω and allows the zener to operate over 0.5 mA to 10 mA current range with essentially no change in voltage or temperature coefficient. Further, a new subsurface zener structure gives low noise and excellent long term stability compared to ordinary monolithic zeners. The package is supplied with a thermal shield to minimize heater power and improve temperature regulation.

The LM199A series references are exceptionally easy to use and free of the problems that are often experienced with ordinary zeners. There is virtually no hysteresis in reference voltage with temperature cycling. Also, the LM199A is free of voltage shifts due to stress on the leads. Finally, since the unit is temperature stabilized, warm up time is fast.

The LM199A can be used in almost any application in place of ordinary zeners with improved performance. Some ideal applications are analog to digital converters, calibration standards, precision voltage or current sources or precision power supplies. Further in many cases the LM199A can replace references in existing equipment with a minimum of wiring changes.

The LM199A series devices are packaged in a standard hermetic TO-46 package inside a thermal shield. The LM199 is rated for operation from −55°C to +125°C while the LM299A is rated for operation from −25°C to +85°C and the LM399A is rated from 0°C to +70°C.

features

- Guaranteed 0.00005%/°C temperature coefficient
- Low dynamic impedance – 0.5Ω
- Initial tolerance on breakdown voltage – 2%
- Sharp breakdown at 400μA
- Wide operating current – 500μA to 10 mA
- Wide supply range for temperature stabilizer
- Guaranteed low noise
- Low power for stabilization – 300 mW at 25°C
- Long term stability – 20 ppm

schematic diagrams

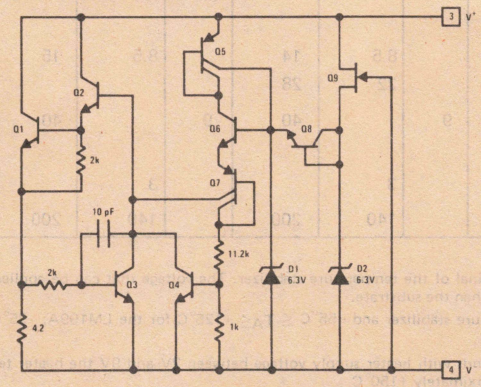

Temperature Stabilizer

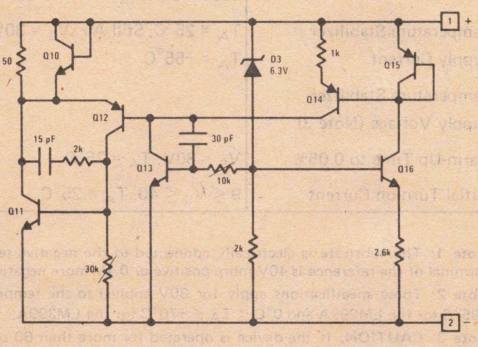

Reference

connection diagram

Metal Can Package

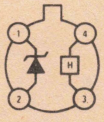

TOP VIEW

Order Number
LM199AH
LM299AH
LM399AH
See Package H04D

functional block diagram

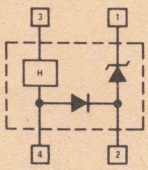

absolute maximum ratings

Temperature Stabilizer Voltage	40V
Reverse Breakdown Current	20 mA
Forward Current	1 mA
Reference to Substrate Voltage $V_{(RS)}$ (Note 1)	+40V −0.1V
Operating Temperature Range	
LM199A	−55°C to +125°C
LM299A	−25°C to +85°C
LM399A	0°C to +70°C
Storage Temperature Range	−55°C to +150°C
Lead Temperature (Soldering, 10 seconds)	300°C

electrical characteristics (Note 2)

PARAMETER	CONDITIONS	LM199A, LM299A			LM399A			UNITS
		MIN	TYP	MAX	MIN	TYP	MAX	
Reverse Breakdown Voltage	$0.5\ mA \le I_R \le 10\ mA$	6.8	6.95	7.1	6.6	6.95	7.3	V
Reverse Breakdown Voltage Change With Current	$0.5\ mA \le I_R \le 10\ mA$		6	9		6	12	mV
Reverse Dynamic Impedance	$I_R = 1\ mA$		0.5	1		0.5	1.5	Ω
Reverse Breakdown Temperature Coefficient	$-55°C \le T_A \le 85°C$ LM199A		0.00002	0.00005				%/°C
	$85°C \le T_A \le 125°C$ LM199A		0.0005	0.0010				%/°C
	$-25°C \le T_A \le 85°C$ LM299A		0.00002	0.00005				%/°C
	$0°C \le T_A \le 70°C$ LM399A					0.00003	0.0001	%/°C
RMS Noise	$10\ Hz \le f \le 10\ kHz$		7	20		7	50	μV
Long Term Stability	Stabilized, $22°C \le T_A \le 28°C$, 1000 Hours, $I_R = 1\ mA \pm 0.1\%$		20			20		ppm
Temperature Stabilizer Supply Current	$T_A = 25°C$, Still Air, $V_S = 30V$		8.5	14		8.5	15	mA
	$T_A = -55°C$		22	28				
Temperature Stabilizer Supply Voltage (Note 3)		9		40	9		40	V
Warm-Up Time to 0.05%	$V_S = 30V$, $T_A = 25°C$		3			3		Seconds
Initial Turn-on Current	$9 \le V_S \le 40$, $T_A = 25°C$		140	200		140	200	mA

Note 1: The substrate is electrically connected to the negative terminal of the temperature stabilizer. The voltage that can be applied to either terminal of the reference is 40V more positive or 0.1V more negative than the substrate.

Note 2: These specifications apply for 30V applied to the temperature stabilizer and $-55°C \le T_A \le +125°C$ for the LM199A; $-25°C \le T_A \le +85°C$ for the LM299A and $0°C \le T_A \le +70°C$ for the LM399A.

Note 3: CAUTION. If the device is operated for more than 60 seconds with heater supply voltage between 2V and 9V the heater temperature control circuitry is not properly biased and the device can rise to approximately +150°C.

typical performance characteristics

Reverse Characteristics

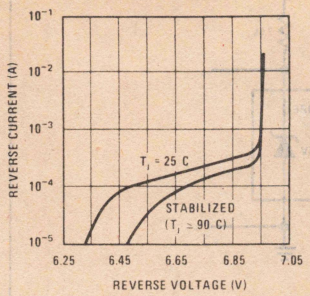

Reverse Voltage Change

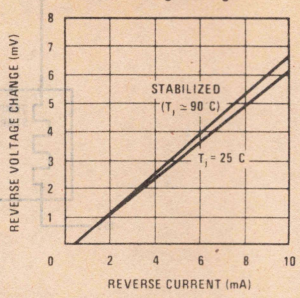

Dynamic Impedance

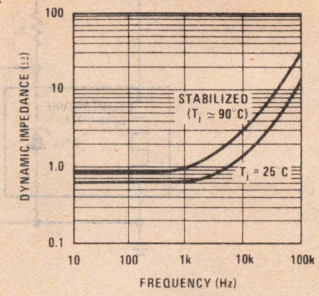

Zener Noise Voltage

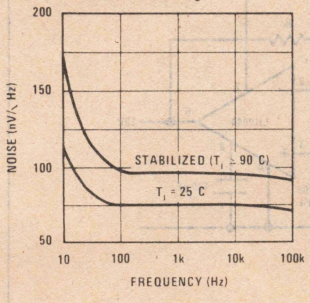

Stabilization Time

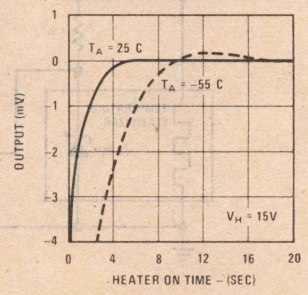

Heater Current

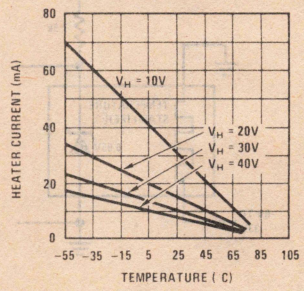

Initial Heater Current

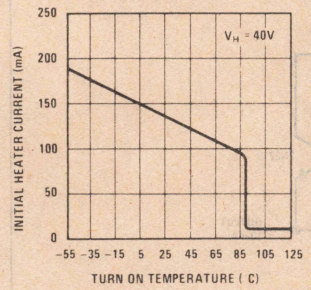

Heater Current

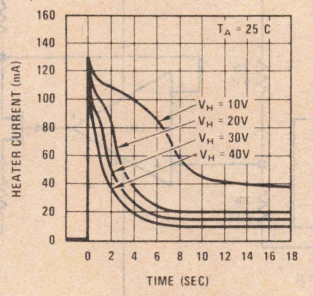

Response Time

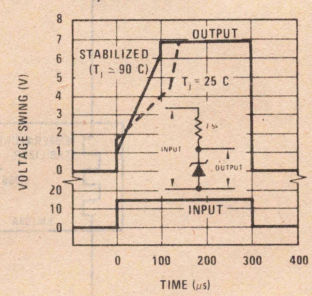

Low Frequency Noise Voltage

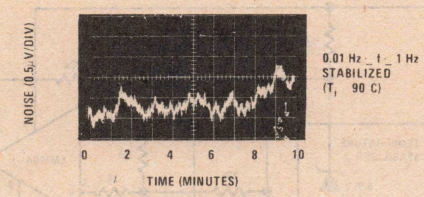

typical applications

Single Supply Operation

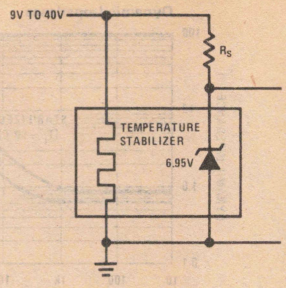

Split Supply Operation

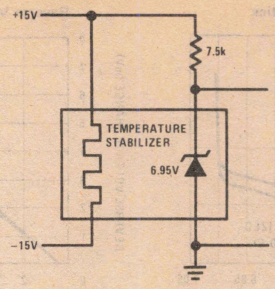

Negative Heater Supply with Positive Reference

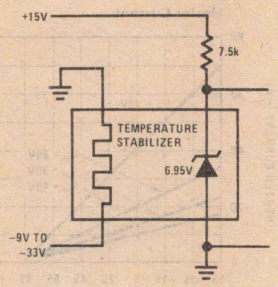

Buffered Reference With Single Supply

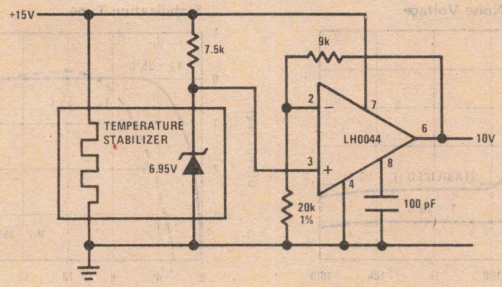

Positive Current Source

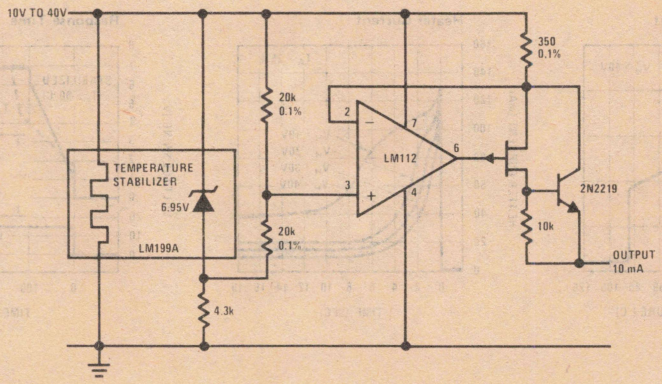

Standard Cell Replacement

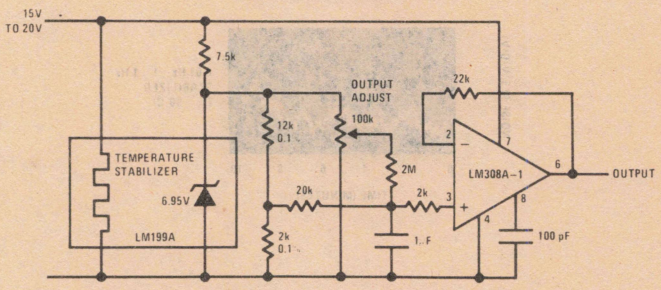

typical applications (con't)

Negative Current Source

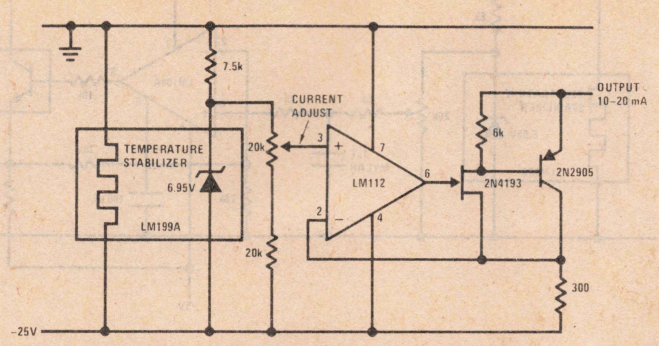

Square Wave Voltage Reference

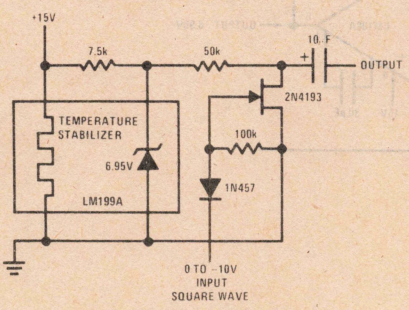

Portable Calibrator*

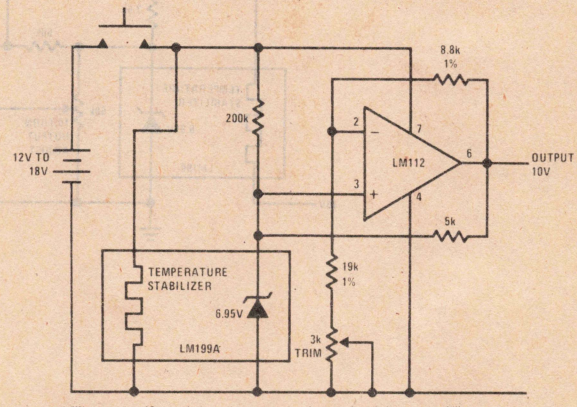

*Warm-up time 10 seconds; intermittant operation does not degrade long term stability.

14V Reference

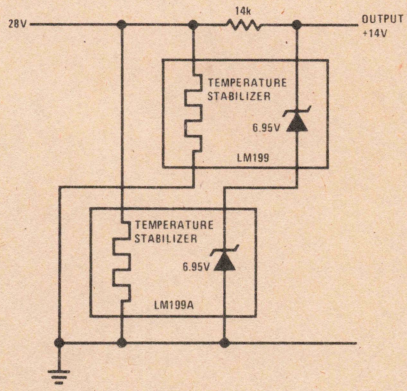

Precision Clamp*

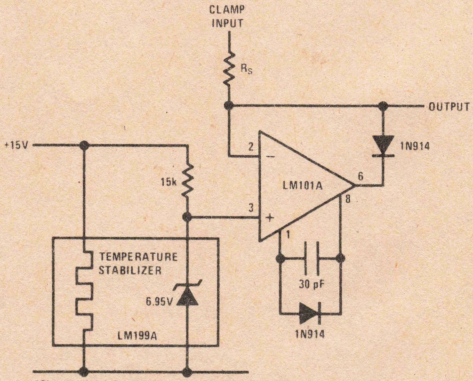

*Clamp will sink 5 mA when input goes more positive than reference.

typical applications (con't)

0V to 20V Power Reference

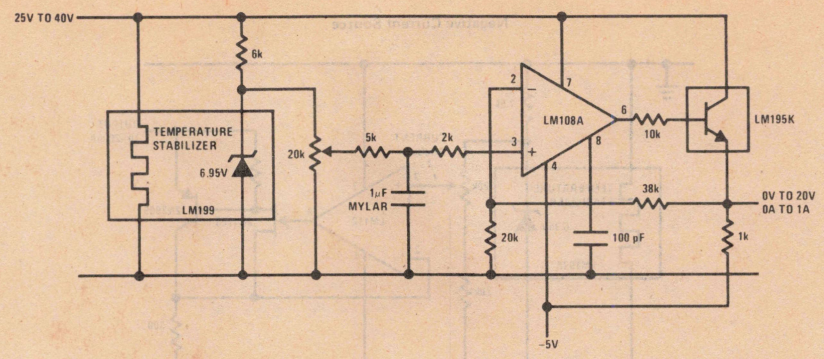

Bipolar Output Reference

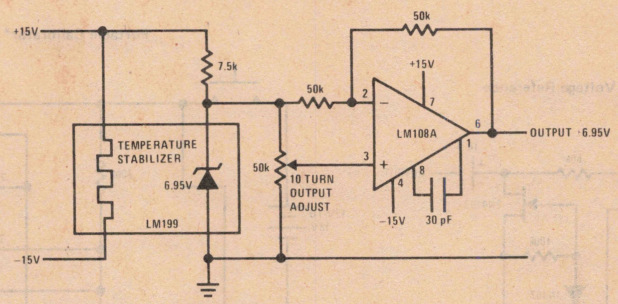

Section 8

Analog Switches

8

Section 8. Analog Switches

Function		Drain-Source "On" Resistance	Drain-Gate Leakage Current	t_{ON}	t_{OFF}	Part Number		Page Number
Type	Style					−55°C to 125°C	−25°C to 85°C	
PMOS	DPDT	200Ω	200pA	350ns	600ns	AH0014	AH0014C	8-7
PMOS	DPDT	200Ω	200pA	100ns	600ns	AH0015	AH0015C	8-7
PMOS	Dual DPST	200Ω	200pA	100ns	600ns	AH0019	AH0019C	8-7
NJFET	Dual SPDT	10Ω	10nA	1.0μs	2.5μs	AH0140	AH0140C	8-10
NJFET	Dual SPDT	15Ω	10nA	1.0μs	2.5μs	AH0153	AH0153C	8-10
NJFET	Dual SPDT	30Ω	1nA	0.8μs	1.0μs	AH0129	AH0129C	8-10
NJFET	Dual SPDT	50Ω	1nA	0.8μs	1.0μs	AH0153	AH0153C	8-10
NJFET	Dual SPDT	80Ω	1nA	0.8μs	1.0μs	AH0126	AH0126C	8-10
NJFET	Dual SPDT	10Ω	10nA	1.0μs	2.5μs	AH0141	AH0141C	8-10
NJFET	Dual SPST	15Ω	10nA	1.0μs	2.5μs	AH0151	AH0151C	8-10
NJFET	Dual SPST	30Ω	1nA	0.8μs	1.0μs	AH0133	AH0133C	8-10
NJFET	Dual SPST	50Ω	1nA	0.8μs	1.0μs	AH0152	AH0152C	8-10
NJFET	Dual SPST	80Ω	1nA	0.8μs	1.0μs	AH0134	AH0134C	8-10
NJFET	DPDT	10Ω	10nA	1.0μs	2.5μs	AH0145	AH0145C	8-10
NJFET	DPDT	15Ω	10nA	1.0μs	2.5μs	AH0163	AH0163C	8-10
NJFET	DPDT	30Ω	1nA	0.8μs	1.0μs	AH0139	AH0139C	8-10
NJFET	DPDT	50Ω	1nA	0.8μs	1.0μs	AH0164	AH0164C	8-10
NJFET	DPDT	80Ω	1nA	0.8μs	1.0μs	AH0142	AH0142C	8-10
NJFET	SPDT	10Ω	10nA	1.0μs	2.5μs	AH0146	AH0146C	8-10
NJFET	SPDT	15Ω	10nA	1.0μs	2.5μs	AH0161	AH0161C	8-10
NJFET	SPDT	30Ω	1nA	0.8μs	1.0μs	AH0144	AH0144C	8-10
NJFET	SPDT	50Ω	1nA	0.8μs	1.0μs	AH0162	AH0162C	8-10
NJFET	SPDT	80Ω	1nA	0.8μs	1.0μs	AH0143	AH0143C	8-10
NJFET	Dual SPST	100Ω	1nA	1.5μs	0.75μs	AH2114	AH2114C	8-17

Additional information on analog switches may be found in the *FET* and *Linear* Data Books.

Analog Switches/Multiplexers Selection Guide

R_{ON} (Ω)	V_A/I (V)	PART NUMBER	LOGIC INPUT	V_S (V) TYP	t_{ON}/t_{OFF} TYP
Dual SPST					
10	±10	AH0141/DG141	TTL	−18, 12	0.8/1.1μs
30	±10	AH0133/DG133	TTL	−18, 12	0.5/0.9μs
80	±10	AH0134/DG134	TTL	−18, 12	0.5/0.9μs
15	±7.5	AH0151/DG151	TTL	±15	0.8/1.1μs
50	±7.5	AH0152/DG152	TTL	±15	0.5/0.9μs
Quad SPST					
200-600	±10	AH0015	TTL	−20, 10, 5	100/400 ns
*200	±10	LF11201	TTL	±15	90/500 ns
*200	±10	LF11202	TTL	±15	90/500 ns
*200	±10	LF11331	TTL	±15	90/500 ns
*200	±10	LF11332	TTL	±15	90/500 ns
*200	±10	LF11333	TTL	±15	90/500 ns
*250	±10	LF13201	TTL	±15	90/500 ns
*250	±10	LF13202	TTL	±15	90/500 ns
*250	±10	LF13331	TTL	±15	90/500 ns
*250	±10	LF13332	TTL	±15	90/500 ns
*250	±10	LF13333	TTL	±15	90/500 ns
280	±7.5	CD4066	CMOS	±7.5	
850	±7.5	CD4016	CMOS	±7.5	
*30	±7.5	AM193	TTL	±15, 5	180/150 ns
*75	±10	AM194	TTL	±15, 5	300/150 ns

R_{ON} (Ω)	V_A/I (V)	PART NUMBER	LOGIC INPUT	V_S (V) TYP	t_{ON}/t_{OFF} TYP
SPDT					
10	±10	AH0146/DG146	TTL	−18, 12	0.8/1.1μs
30	±10	AH0144/DG144	TTL	−18, 12	0.5/0.9μs
80	±10	AH0143/DG143	TTL	−18, 12	0.5/0.9μs
15	±7.5	AH0161/DG161	TTL	±15	0.8/1.1μs
50	±7.5	AH0162/DG162	TTL	±15	0.5/0.9μs
100	±9	AH2114 (Sw. 1)	15V TTL	±15	35/600 ns
		(Sw. 2)			1.2μs/50 ns
Triple SPDT					
280	±7.5	CD4053	CMOS	±7.5	150/150 ns
Dual DPST					
10	±10	AH0140/DG140	TTL	−18, 12	0.8/1.1μs
30	±10	AH0129/DG129	TTL	−18, 12	0.5/0.9μs
80	±10	AH0126/DG126	TTL	−18, 12	0.5/0.9μs
15	±7.5	AH0153/DG153	TTL	±15	0.8/1.1μs
50	±7.5	AH0154/DG154	TTL	±15	0.5/0.9μs
200-600	±10	AH0019	TTL	−20, 10, 5	100/400 ns
Dual DPDT					
10	±10	AH0145/DG145	TTL	−18, 12	0.8/1.1μs
30	±10	AH0139/DG139	TTL	−18, 12	0.5/0.9μs
80	±10	AH0142/DG142	TTL	−18, 12	0.5/0.9μs
15	±7.5	AH0163/DG163	TTL	±15	0.8/1.1μs
50	±7.5	AH0164/DG164	TTL	±15	0.5/0.9μs
200-600	±10	AH0014	TTL	−20, 10, 5	350/400 ns

R_{ON} (Ω)	V_A/I (V)	PART NUMBER	LOGIC INPUT	V_S (V) TYP	t_{ON}/t_{OFF} TYP
MULTIPLEXERS					
4-Channel Differential					
280	±7.5	CD4052	CMOS	±7.5	150/150 ns
*350	12, −15	LF11509	TTL	±15	1/0.2μs
270	±7.5	CD4529B	CMOS	±7.5	50/50 ns
6-Channel					
250-1500	50 mA	AM2009/MM4504/ MM5504	TTL	−15, 5	
8-Channel					
250-400	±5	AM3705	TTL	−15, 5	300/600 ns
*350	12, −15	LF11508	TTL	±15	1/0.2μs
270	±7.5	CD4529B	CMOS	±7.5	50/50 ns
280	±7.5	CD4051	CMOS	±7.5	150/150 ns

Notes:

R_{ON} max @ $T_A = 25°C$.

V_A/I = maximum voltage or current to be safely switched.

Part number = basic number/alternate number (i.e., AM181/DG181). May be ordered by either number.

*Preferred devices.

AM, AH5 Series data sheets may be found in the *FET Data Book*.

LF Series products are to be found in the *Linear Data Book*.

CD Series data sheets are in the *CMOS Data Book*.

Analog Switches Cross Reference Guide

DEVICE NUMBER	TYPE/R_{ON}/V_A/V_S	NATIONAL PIN-FOR-PIN	FUNCTIONAL EQUIVALENT
Analog Devices			
AD7516	4-SPST/280Ω/±7.5V/±7.5V	CD4066	
Fairchild			
F4016	4 SPST/800Ω/±7.5V/±7.5V	CD4016	
F4051	8-Ch. MUX/280Ω/±7.5V/±7.5V	CD4051	
F4052	4-Ch. MUX/280Ω/±7.5V/±7.5V	CD4052	
F4053	3-SPDT/280Ω/±7.5V/±7.5V	CD4053	
F4066	4-SPST/280Ω/±7.5V/±7.5V	CD4066	
Harris			
HD4051	8-Ch MUX/280Ω/±7.5V/±7.5V	CD4051	
HD4052	4-Ch MUX/280Ω/±7.5V/±7.5V	CD4052	
HD4053	3 SPDT/280Ω/±7.5V/±7.5V	CD4053	
HD4066	4-SPST/280Ω/±7.5V/±7.5V	CD4066	
Intersil			
DG126/DG426	2-DPST/80Ω/±10V/−18V,12V	AH0126	
DG129/DG429	2-DPST/30Ω/±10V/−18V,12V	AH0129	
DG133/DG433	2-SPST/30Ω/±10V/−18V,12V	AH0133	
DG134/DG434	2-SPST/80Ω/±10V/−18V,12V	AH0134	
DG139/DG439	DPDT/30Ω/±10V/±15V	AH0139	
DG140/DG440	2-DPST/10Ω/±10V/−18V,12V	AH0140	
DG141/DG441	2-SPST/10Ω/±10V/−18V,12V	AH0141	
DG142/DG442	DPDT/80Ω/±10V/−18V,12V	AH0142	
DG143/DG443	SPDT/80Ω/±10V/−18V,12V	AH0143	
DG144/DG444	SPDT/30Ω/±10V/−18V,12V	AH0144	
DG145/DG445	2-DPST/10Ω/±10V/−18V,12V	AH0145	
DG146/DG446	SPDT/10Ω/±10V/−18V,12V	AH0146	
DG151/DG451	2-SPST/15Ω/±7.5V/±15V	AH0151	
DG152/DG452	2-SPST/50Ω/±7.5V/±15V	AH0152	
DG153/DG453	2-DPST/10Ω/±7.5V/±15V	AH0153	
DG154/DG454	2-DPST/50Ω/±7.5V/±15V	AH0154	
DG161/DG461	SPDT/15Ω/±7.5V/±15V	AH0161	
DG162/DG462	SPDT/50Ω/±7.5V/±15V	AH0162	
DG163/DG463	DPDT/15Ω/±7.5V/±15V	AH0163	
DG164/DG464	DPDT/50Ω/±7.5V/±15V	AH0164	
DG172	4-SPST/200–600Ω/±10V/−20V, 10V, 5V		AH0015
IH5001	SPST/30Ω/±8V/−18V,12V		1/2AH0133
IH5002	SPST/50Ω/±8V/−18V,12V		1/2AH0133
IH5003	2-SPST/30Ω/±10V/−18V,12V		AH0133
IH5004	2-SPST/50Ω/±10V/−18V,12V		AH0134
IH5005	2-SPST/10Ω/±10V/−18V,12V		AH0141
IH5006	2-SPST/30Ω/±10V/−18V,12V		AH0133
IH5007	2-SPST/80Ω/±10V/−18V,12V		AH0134
MM450/MM550	2-DPDT/200–600Ω/±10V	MM450/MM550	
MM451/MM551	4-Ch. MUX/200–600Ω/±10V	MM451/MM551	
MM452/MM552	4-SPST/200–600Ω/±10V	MM452/MM552	
MM455/MM555	3-SPST/200–600Ω/±10V	MM455/MM555	
DG508	8-Ch. MUX/450Ω/*/±15V	LF11508	
DG509	4-Ch. Diff. MUX/450Ω/*/±15V	LF11509	
IH5060	16-Ch. MUX/400Ω/*/±15V	LF11506	
IH5070	8-Ch. Diff. MUX/400Ω/*/±15V	LF11507	
Motorola			
MC14016	4-SPST/400Ω/±7.5V/±7.5V	CD4016	
MC14051	8-Ch. MUX/280Ω/±7.5V/±7.5V	CD4051	
MC14052	4-Ch. MUX/280Ω/±7.5V/±7.5V	CD4052	
MC14053	3-SPDT/280Ω/±7.5V/±7.5V	CD4053	
MC14066	4-SPDT/280Ω/±7.5V/±7.5V	CD4066	
MC14529	4-Ch. MUX/270Ω/±7.5V/±7.5V		CD4051

*Denotes items which have a maximum analog voltage of ±15V, the National equivalent devices have ±10V maximum analog voltage.

Analog Switches Cross Reference Guide

DEVICE NUMBER	TYPE/R_{ON}/V_A/V_S	NATIONAL PIN-FOR-PIN	FUNCTIONAL EQUIVALENT
RCA			
CD4016	4-SPST/850Ω/±7.5V/±7.5V	CD4016	
CD4051	8-Ch. MUX/280Ω/±7.5V/±7.5V	CD4051	
CD4052	4-Ch. MUX/280Ω/±7.5V/±7.5V	CD4052	
CD4053	3-SPDT/280Ω/±7.5V/±7.5V	CD4053	
CD4066	4-SPST/280Ω/±7.5V/±7.5V	CD4066	
Siliconix			
DG126	2-DPST/80Ω/±10V/−18V,12V	AH0126	
DG129	2-DPST/30Ω/±10V/−18V,12V	AH0129	
DG133	2-SPST/30Ω/±10V/−18V,12V	AH0133	
DG134	2-SPST/80Ω/±10V/−18V,12V	AH0134	
DG139	DPDT/30Ω/±10V/±15V	AH0139	
DG140	2-DPST/10Ω/±10V/−18V,12V	AH0140	
DG141	2-SPST/10Ω/±10V/−18V,12V	AH0141	
DG142	DPDT/80Ω/±10V/−18V,12V	AH0142	
DG143	SPDT/80Ω/±10V/−18V,12V	AH0143	
DG144	SPDT/30Ω/±10V/−18V,12V	AH0144	
DG145	2-DPST/10Ω/±10V/−18V,12V	AH0145	
DG146	SPDT/10Ω/±10V/−18V,12V	AH0146	
DG151	2-SPST/15Ω/±7.5V/±15V	AH0151	
DG152	2-SPST/50Ω/±7.5V/±15V	AH0152	
DG153	2-DPST/10Ω/±7.5V/±15V	AH0153	
DG154	2-DPST/50Ω/±7.5V/±15V	AH0154	
DG161	SPDT/15Ω/±7.5V/±15V	AH0161	
DG162	SPDT/50Ω/±7.5V/±15V	AH0162	
DG163	DPDT/15Ω/±7.5V/±15V	AH0163	
DG164	DPDT/50Ω/±7.5V/±15V	AH0164	
DG172	4-SPST/200−600Ω/±10V/−20V, 10V,5V		AH0015
DG173	DPDT/150−500Ω/±10V/−20V 10V,5V	AH0014	
DG201	4-SPST/100Ω/*/±15V	LF11201	
DG501	8-Ch. MUX/200−800Ω/±5V/−15V,5V		AM3705
DG511	4-Ch. Diff. MUX/200−700Ω/±10V/ −20V, 10V		MM454/MM554
DG506	16-Ch. MUX/400Ω/*/±15V	LF11506	
DG507	8-Ch. Diff. MUX/400Ω/*/±15V	LF11507	
DG508	8-Ch. MUX/400Ω/*/±15V	LF11508	
DG509	4-Ch. Diff. MUX/400Ω/*/±15V	LF11509	
DGM122	2-DPST/100−500Ω/±10V/−20V, 10V,5V		AH0019
SI455/SI555	3-SPST/200−600Ω/±10V/−20V, 10V,5V		MM455/MM555
Solitron			
CM4016	4-SPST/400Ω/±7.5V/±7.5V	CD4016	
CM4051	8-Ch. MUX/280Ω/±7.5V/±7.5V	CD4051	
CM4052	4-Ch. MUX/280Ω/±7.5V/±7.5V	CD4052	
CM4053	3-SPDT/280Ω/±7.5V/±7.5V	CD4053	
CM4116	4-SPST/800Ω/±7.5V/±7.5V	CD4016	
Teledyne−Crystalonics			
CAG-13	2-SPST/50Ω/±10V/−18V,15V		AH0134
CAG-21	2-DPST/30Ω/−6V,10V/−18V,15V		AH0129
CAG-22	2-SPST/30Ω/−6V,10V/−18V,15V		AH0133
CAG-23	2-SPST/50Ω/±10V/−18V,15V		AH0134
CAG-24	2-SPST/30Ω/−6V,10V/−18V,15V		AH0133
CAG-27-10	2-SPST/10Ω/−6V,10V/−18V,15V		AH0141
CAG-30	SPST/60Ω/±10V/±15V,5V		1/2AM182
CAG-42	2-SPST/60Ω/±10V/−18V,15V		AH0134
CAG-45	2-SPST/60Ω/±10V/−18V,15V		AH0134
CAG-48	2-SPST/60Ω/±10V/−18V,15V		AH0134
CD4066	4-SPST/280Ω/±7.5V/±7.5V	CD4066	
CS4R	2-DPST/15Ω/±10V/−18V,15V		AH0140
Texas Instruments			
TF4016	4-SPST/400Ω/±7.5V/±7.5V	CD4016	
TF4051	8-Ch. MUX/280Ω/±7.5V/±7.5V	CD4051	
TF4052	4-Ch. MUX/280Ω/±7.5V/±7.5V	CD4052	
TF4053	3-SPDT/280Ω/±7.5V/±7.5V	CD4053	

National Semiconductor

Analog Switches

AH0014/AH0014C DPDT, AH0015C Quad SPST, AH0019/AH0019C Dual DPST-TTL/DTL Compatible MOS Analog Switches

general description

This series of TTL/DTL compatible MOS analog switches feature high speed with internal level shifting and driving. The package contains two monolithic integrated circuit chips: the MOS analog chip is similar to the MM450 type which consists of four MOS analog switch transistors; the second chip is a bipolar I.C. gate and level shifter. The series is available in both hermetic dual-in-line package and flatpack.

features

- Large analog voltage switching ±10V
- Fast switching speed 500 ns
- Operation over wide range of power supplies
- Low ON resistance 200Ω
- High OFF resistance $10^{11}\Omega$
- Fully compatible with DTL or TTL logic
- Includes gating and level shifting

These switches are particularly suited for use in both military and industrial applications such as commutators in data acquisition systems, multiplexers, A/D and D/A converters, long time constant integrators, sample and hold circuits, modulators/demodulators, and other analog signal switching applications.

The AH0014, AH0015 and AH0019 are specified for operation over the −55°C to +125°C military temperature range. The AH0014C, AH0015C and AH0019C are specified for operation over the −25°C to +85°C temperature range.

block and connection diagrams

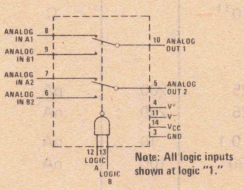

Note: All logic inputs shown at logic "1."

Order Number AH0014D or AH0014CD
See Package D14D

Quad SPST

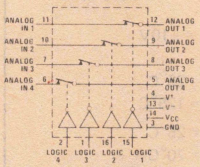

Note: All logic inputs shown at logic "1."

Order Number AH0015D or AH0015CD
See Package D16C

Dual DPST

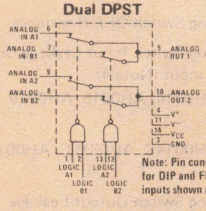

Note: Pin connections are identical for DIP and Flatpack. All logic inputs shown at logic "1."

Order Number AH0019D or AH0019CD
See Package D14D

typical applications

Integrator

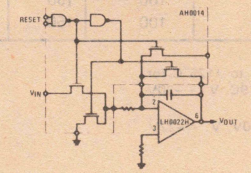

Reset Stabilized Amplifier

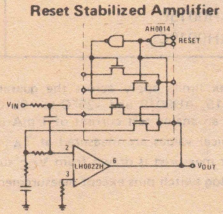

*Previously called NH0014/NH0014C and NH0019/NH0019C

absolute maximum ratings

V_{CC} Supply Voltage	7.0V
V^- Supply Voltage	−30V
V^+ Supply Voltage	+30V
V^+/V^- Voltage Differential	40V
Logic Input Voltage	5.5V
Storage Temperature Range	−65°C to +150°C
Operating Temperature Range	
AH0014, AH0015, AH0019	−55°C to +125°C
AH0014C, AH0015C, AH0019C	−25°C to +85°C
Lead Temperature (Soldering, 10 sec)	300°C

electrical characteristics (Notes 1 and 2)

PARAMETER	CONDITIONS		MIN	TYP	MAX	UNITS
Logical "1" Input Voltage	V_{CC} = 4.5V		2.0			V
Logical "0" Input Voltage	V_{CC} = 4.5V				0.8	V
Logical "1" Input Current	V_{CC} = 5.5V	V_{IN} = 2.4V			5	μA
Logical "1" Input Current	V_{CC} = 5.5V	V_{IN} = 5.5V			1	μA
Logical "0" Input Current	V_{CC} = 5.5V	V_{IN} = 0.4V		0.2	0.4	mA
Power Supply Current Logical "1" Input – each gate (Note 3)	V_{CC} = 5.5V	V_{IN} = 4.5V		0.85	1.6	mA
Power Supply Current Logical "0" Input – each gate (Note 3)	V_{CC} = 5.5V	V_{IN} = 0V				
AH0014, AH0014C				1.5	3.0	mA
AH0015, AH0015C				0.22	0.41	mA
AH0019, AH0019C				0.22	0.41	mA
Analog Switch ON Resistance – each gate	V_{IN} (Analog) = +10V			75	200	Ω
	V_{IN} (Analog) = −10V			150	600	Ω
Analog Switch OFF Resistance				10^{11}		Ω
Analog Switch Input Leakage Current – each input (Note 4)	V_{IN} = −10V					
AH0014, AH0015, AH0019	T_A = 25°C			25	200	pA
	T_A = 125°C			25	200	nA
AH0014C, AH0015C, AH0019C	T_A = 25°C			0.1	10	nA
	T_A = 70°C			30	100	nA
Analog Switch Output Leakage Current – each output (Note 4)	V_{OUT} = −10V					
AH0014, AH0015, AH0019	T_A = 25°C			40	400	pA
	T_A = 125°C			40	400	nA
AH0014C, AH0015C, AH0019C	T_A = 25°C			0.05	10	nA
	T_A = 70°C			4	50	nA
Analog Input (Drain) Capacitance	1 MHz @ Zero Bias			8	10	pF
Output Source Capacitance	1 MHz @ Zero Bias			11	13	pF
Analog Turn-OFF Time – t_{OFF}	See test circuit; T_A = 25°C			600	750	ns
Analog Turn-ON Time – t_{ON}	See test circuit; T_A = 25°C					
AH0014, AH0014C				350	425	ns
AH0015, AH0015C				100	150	ns
AH0019, AH0019C				100	150	ns

Note 1: Min/max limits apply across the guaranteed temperature range of −55°C to +125°C for AH0014, AH0015, AH0019 and −25°C to +85°C for AH0014C, AH0015C, AH0019C. V^- = −20V. V^+ = +10V and an analog test current of 1 mA unless otherwise specified.

Note 2: All typical values are measured at T_A = 25°C with V_{CC} = 5.0V. V^+ = +10V, V^- = −22V.

Note 3: Current measured is drawn from V_{CC} supply.

Note 4: All analog switch pins except measurement pin are tied to V^+.

analog switch characteristics (Note 2)

R_{ON} vs Temperature

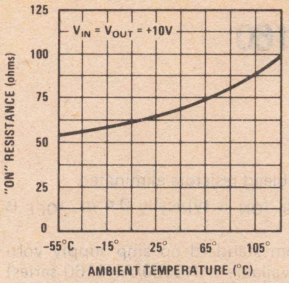

R_{ON} vs Temperature

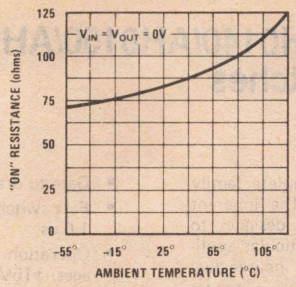

R_{ON} vs Temperature

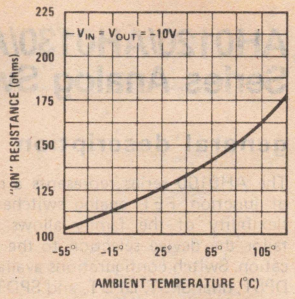

C_{IN} vs V_{IN}

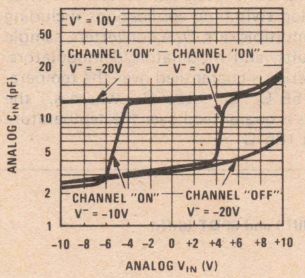

Leakage vs V_{IN} (Channel "OFF")

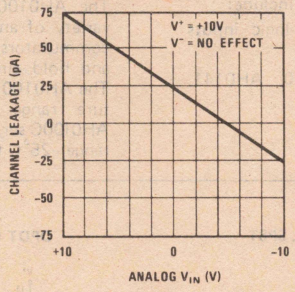

Driver Gate V_{IN} vs V_{OUT}

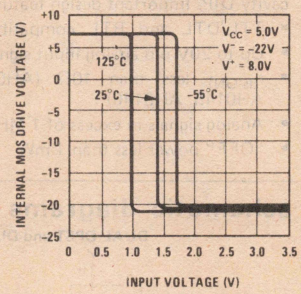

Schematic (Single Driver Gate and MOS Switch Shown)

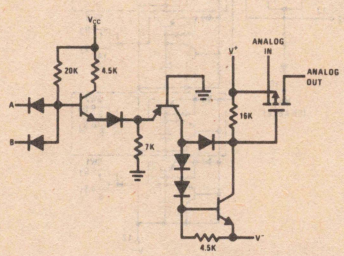

Analog Switching Time Test Circuit

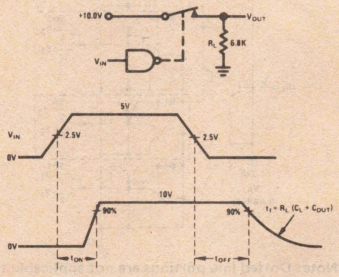

selecting power supply voltage

The graph shows the boundary conditions which must be used for proper operation of the unit. The range of operation for power supply V^- is shown on the X axis. It must be between −25V and −8V. The allowable range for power supply V^+ is governed by supply V^-. With a value chosen for V^-, V^+ may be selected as any value along a vertical line passing through the V^- value and terminated by the boundaries of the operating region. A voltage difference between power supplies of at least 5V should be maintained for adequate signal swing.

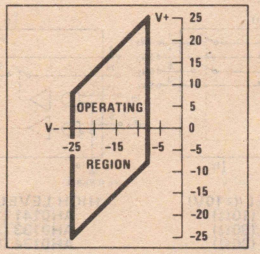

National Semiconductor

Analog Switches

AH0120/AH0130/AH0140/AH0150/AH0160 Series Analog Switches

general description

The AH0100 series represents a complete family of junction FET analog switches. The inherent flexibility of the family allows the designer to tailor the device selection to the particular application. Switch configurations available include dual DPST, dual SPST, DPDT, and SPDT. $r_{ds(ON)}$ ranges from 10 ohms through 100 ohms. The series is available in both 14 lead flat pack and 14 lead cavity DIP. Important design features include:

- TTL/DTL and RTL compatible logic inputs
- Up to 20V p-p analog input signal
- $r_{ds(ON)}$ less than 10Ω (AH0140, AH0141, AH0145, AH0146)
- Analog signals in excess of 1 MHz
- "OFF" power less than 1 mW
- Gate to drain bleed resistors eliminated
- Fast switching, t_{ON} is typically 0.4 μs, t_{OFF} is 1.0 μs
- Operation from standard op amp supply voltages, ±15V, available (AH0150/AH0160 series)
- Pin compatible with the popular DG 100 series

The AH0100 series is designed to fulfill a wide variety of analog switching applications including commutators, multiplexers, D/A converters, sample and hold circuits, and modulators/demodulators. The AH0100 series is guaranteed over the temperature range -55°C to +125°C; whereas, the AH0100C series is guaranteed over the temperature range -25°C to +85°C

schematic diagrams

DUAL DPST and DUAL SPST

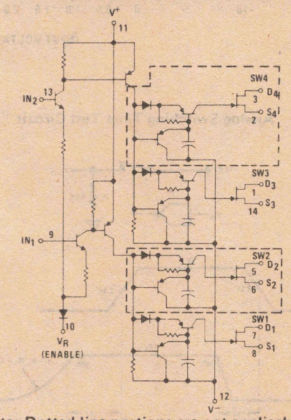

Note: Dotted line portions are not applicable to the dual SPST.

DPDT (diff.) and SPDT (diff.)

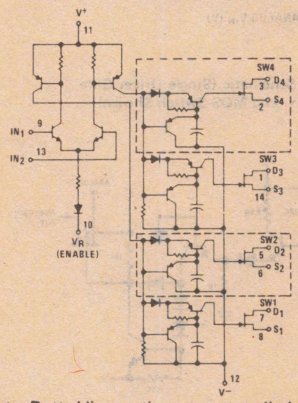

Note: Dotted line portions are not applicable to the SPDT (differential).

Order any of the devices below using the part number with a D suffix. See Package D16C. Additionally, AH0133C, AH0134C, AH0151C, and AH0152C are available with N suffix. See Package N16A.

logic and connection diagrams

DUAL DPST

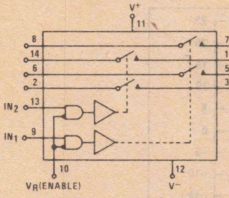

HIGH LEVEL (±10V)
AH0140 (10Ω)
AH0129 (30Ω)
AH0126 (80Ω)
MEDIUM LEVEL (±7.5V)
AH0153 (15Ω)
AH0154 (50Ω)

DUAL SPST

* Pinned out in N Package only.

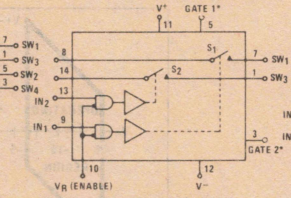

HIGH LEVEL (±10V)
AH0141 (10Ω)
AH0133 (30Ω)
AH0134 (80Ω)
MEDIUM LEVEL (±7.5V)
AH0151 (15Ω)
AH0152 (50Ω)

DPDT (diff.)

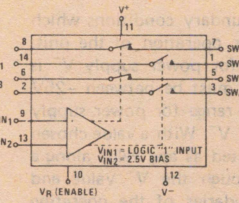

HIGH LEVEL (±10V)
AH0145 (10Ω)
AH0139 (30Ω)
AH0142 (80Ω)
MEDIUM LEVEL (±7.5V)
AH0163 (15Ω)
AH0164 (50Ω)

SPDT (diff.)

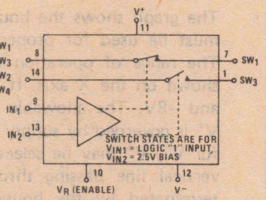

HIGH LEVEL (±10V)
AH0146 (10Ω)
AH0144 (30Ω)
AH0143 (80Ω)
MEDIUM LEVEL (±7.5V)
AH0161 (15Ω)
AH0162 (50Ω)

absolute maximum ratings

		High Level	Medium Level
Total Supply Voltage ($V^+ - V^-$)		36V	34V
Analog Signal Voltage ($V^+ - V_A$ or $V_A - V^-$)		30V	25V
Positive Supply Voltage to Reference ($V^+ - V_R$)		25V	25V
Negative Supply Voltage to Reference ($V_R - V^-$)		22V	22V
Positive Supply Voltage to Input ($V^+ - V_{IN}$)		25V	25V
Input Voltage to Reference ($V_{IN} - V_R$)		±6V	±6V
Differential Input Voltage ($V_{IN} - V_{IN2}$)		±6V	±6V
Input Current, Any Terminal		30 mA	30 mA
Power Dissipation		See Curve	
Operating Temperature Range	AH0100 Series	−55°C to +125°C	
	AH0100C Series	−25°C to +85°C	
Storage Temperature Range		−65°C to +150°C	
Lead Temperature (Soldering, 10 sec)		300°C	

electrical characteristics for "HIGH LEVEL" Switches (Note 1)

PARAMETER	SYMBOL	DEVICE TYPE				CONDITIONS		LIMITS		UNITS
		DUAL DPST	DUAL SPST	DPDT (DIFF)	SPDT (DIFF)	$V^+ = 12.0V$, $V^- = -18.0V$, $V_R = 0.0V$		TYP	MAX	
Logic "1" Input Current	$I_{IN(ON)}$	All Circuits				Note 2	$T_A = 25°C$	2.0	60	μA
							Over Temp. Range		120	μA
Logic "0" Input Current	$I_{IN(OFF)}$	All Circuits				Note 2	$T_A = 25°C$	.01	.1	μA
							Over Temp. Range		2.0	μA
Positive Supply Current Switch ON	$I^+_{(ON)}$	All Circuits				One Driver ON Note 2	$T_A = 25°C$	2.2	3.0	mA
							Over Temp. Range		3.3	mA
Negative Supply Current Switch ON	$I^-_{(ON)}$	All Circuits				One Driver ON Note 2	$T_A = 25°C$	−1.0	−1.8	mA
							Over Temp. Range		−2.0	mA
Reference Input (Enable) ON Current	$I_{R(ON)}$	All Circuits				One Driver ON Note 2	$T_A = 25°C$	−1.0	−1.4	mA
							Over Temp. Range		−1.6	mA
Positive Supply Current Switch OFF	$I^+_{(OFF)}$	All Circuits				$V_{IN1} = V_{IN2} = 0.8V$	$T_A = 25°C$	1.0	10	μA
							Over Temp. Range		25	μA
Negative Supply Current Switch OFF	$I^-_{(OFF)}$	All Circuits				$V_{IN1} = V_{IN2} = 0.8V$	$T_A = 25°C$	−1.0	−10	μA
							Over Temp. Range		−25	μA
Reference Input (Enable) OFF Current	$I_{R(OFF)}$	All Circuits				$V_{IN1} = V_{IN2} = 0.8V$	$T_A = 25°C$	−1.0	−10	μA
							Over Temp. Range		−25	μA
Switch ON Resistance	$r_{ds(ON)}$	AH0126	AH0134	AH0142	AH0143	$V_D = 10V$, $I_D = 1$ mA	$T_A = 25°C$	45	80	Ω
							Over Temp. Range		150	Ω
Switch ON Resistance	$r_{ds(ON)}$	AH0129	AH0133	AH0139	AH0144	$V_D = 10V$, $I_D = 1$ mA	$T_A = 25°C$	25	30	Ω
							Over Temp. Range		60	Ω
Switch ON Resistance	$r_{ds(ON)}$	AH0140	AH0141	AH0145	AH0146	$V_D = 10V$, $I_F = 1$ mA	$T_A = 25°C$	8	10	Ω
							Over Temp. Range		20	Ω
Driver Leakage Current	$(I_D + I_S)_{ON}$	All Circuits				$V_D = V_S = -10V$	$T_A = 25°C$	.01	1	nA
							Over Temp. Range		100	nA
Switch Leakage Current	$I_{S(OFF)}$ OR $I_{D(OFF)}$	AH0126 AH0129	AH0134 AH0133	AH0142 AH0139	AH0143 AH0144	$V_{DS} = \pm 20V$	$T_A = 25°C$	0.8	1	nA
							Over Temp. Range		100	nA
Switch Leakage Current	$I_{S(OFF)}$ OR $I_{D(OFF)}$	AH0140	AH0141	AH0145	AH0146	$V_{DS} = \pm 20V$	$T_A = 25°C$	4	10	nA
							Over Temp. Range		1.0	μA
Switch Turn-ON Time	t_{ON}	AH0126 AH0129	AH0134 AH0133	AH0142 AH0139	AH0143 AH0144	See Test Circuit $V_A = \pm 10V$ $T_A = 25°C$		0.5	0.8	μs
Switch Turn-ON Time	t_{ON}	AH0140	AH0141	AH0145	AH0146	See Test Circuit $V_A = \pm 10V$ $T_A = 25°C$		0.8	1.0	μs
Switch Turn-OFF Time	t_{OFF}	AH0126 AH0129	AH0134 AH0133	AH0142 AH0139	AH0143 AH0144	See Test Circuit $V_A = \pm 10V$ $T_A = 25°C$		0.9	1.6	μs
Switch Turn-OFF Time	t_{OFF}	AH0140	AH0141	AH0145	AH0146	See Test Circuit $V_A = \pm 10V$ $T_A = 25°C$		1.1	2.5	μs

Note 1: Unless otherwise specified these limits apply for −55°C to +125°C for the AH0100 series and −25°C to +85°C for the AH0100C series. All typical values are for $T_A = 25°C$.

Note 2: For the DPST and Dual DPST, the ON condition is for $V_{IN} = 2.5V$; the OFF condition is for $V_{IN} = 0.8V$. For the differential switches and SW1 and 2 ON, $V_{IN2} = 2.5V$, $V_{IN1} = 3.0V$. For SW3 and 4 ON, $V_{IN2} = 2.5V$, $V_{IN1} = 2.0V$.

electrical characteristics for "MEDIUM LEVEL" Switches (Note 1)

PARAMETER	SYMBOL	DEVICE TYPE				CONDITIONS		LIMITS		UNITS
		DUAL DPST	DUAL SPST	DUAL DPDT	SPDT (DIFF)	$V^+ = +15.0V$, $V^- = -15V$, $V_R = 0V$		TYP	MAX	
Logic "1" Input Current	$I_{IN(ON)}$	All Circuits				Note 2	$T_A = 25°C$	20	60	μA
							Over Temp. Range		120	μA
Logic "0" Input Current	$I_{IN(OFF)}$	All Circuits				Note 2	$T_A = 25°C$	.01	0.1	μA
							Over Temp. Range		2	μA
Positive Supply Current Switch ON	$I^+_{(ON)}$	All Circuits				One Driver ON Note 2	$T_A = 25°C$	2.2	3.0	mA
							Over Temp. Range		3.3	mA
Negative Supply Current Switch ON	$I^-_{(ON)}$	All Circuits				One Driver ON Note 2	$T_A = 25°C$	-1.0	-1.8	mA
							Over Temp. Range		-2.0	mA
Reference Input (Enable) ON Current	$I_{R(ON)}$	All Circuits				One Driver ON Note 2	$T_A = 25°C$	-1.0	-1.4	mA
							Over Temp. Range		-1.6	mA
Positive Supply Current Switch OFF	$I^+_{(OFF)}$	All Circuits				$V_{IN1} = V_{IN2} = 0.8V$	$T_A = 25°C$	1.0	10	μA
							Over Temp. Range		25	μA
Negative Supply Current Switch OFF	$I^-_{(OFF)}$	All Circuits				$V_{IN1} = V_{IN2} = 0.8V$	$T_A = 25°C$	-1.0	-10	μA
							Over Temp. Range		-25	μA
Reference Input (Enable) OFF Current	$I_{R(OFF)}$	All Circuits				$V_{IN1} = V_{IN2} = 0.8V$	$T_A = 25°C$	-1.0	-10	μA
							Over Temp. Range		-25	μA
Switch ON Resistance	$r_{ds(ON)}$	AH0153	AH0151	AH0163	AH0161	$V_D = 7.5V$, $I_D = 1mA$	$T_A = 25°C$	10	15	Ω
							Over Temp. Range		30	Ω
Switch ON Resistance	$r_{ds(ON)}$	AH0154	AH0152	AH0164	AH0162	$V_D = 7.5V$, $I_D = 1mA$	$T_A = 25°C$	45	50	Ω
							Over Temp. Range		100	Ω
Driver Leakage Current	$(I_D + I_S)_{ON}$	All Circuits				$V_D = V_S = -7.5V$	$T_A = 25°C$	.01	2	nA
							Over Temp. Range		500	nA
Switch Leakage Current	$I_{D(OFF)}$ OR $I_{S(OFF)}$	AH0153	AH0151	AH0163	AH0161	$V_{DS} = \pm 15V$	$T_A = 25°C$	5	10	nA
							Over Temp. Range		1.0	μA
Switch Leakage Current	$I_{D(OFF)}$ OR $I_{S(OFF)}$	AH0154	AH0152	AH0164	AH0162	$V_{DS} = \pm 15.0V$	$T_A = 25°C$	1.0	2.0	nA
							Over Temp. Range		200	nA
Switch Turn-ON Time	t_{ON}	AH0153	AH0151	AH0163	AH0161	See Test Circuit $V_A = \pm 7.5V$ $T_A = 25°C$		0.8	1.0	μs
Switch Turn-ON Time	t_{ON}	AH0154	AH0152	AH0164	AH0162	See Test Circuit $V_A = \pm 7.5V$ $T_A = 25°C$		0.5	0.8	μs
Switch Turn-OFF Time	t_{OFF}	AH0153	AH0151	AH0163	AH0161	See Test Circuit $V_A = \pm 7.5V$ $T_A = 25°C$		1.1	2.5	μs
Switch Turn-OFF Time	t_{OFF}	AH0154	AH0152	AH0164	AH0162	See Test Circuit $V_A = \pm 7.5V$ $T_A = 25°C$		0.9	1.5	μs

Note 1: Unless otherwise specified, these limits apply for -55°C to +125°C for the AH0100 series and -25°C to +85°C for the AH0100C series. All typical values are for $T_A = 25°C$.

Note 2: For the DPST and Dual DPST, the ON condition is for $V_{IN} = 2.5V$; the OFF condition is for $V_{IN} = 0.8V$. For the differential switches and SW1 and 2 ON, $V_{IN2} = 2.5V$, $V_{IN1} = 3.0V$. For SW3 and 4 ON, $V_{IN2} = 2.5V$, $V_{IN1} = 2.0V$.

typical performance characteristics

Power Dissipation vs Temperature

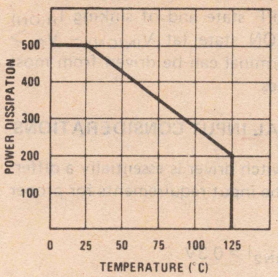

ON Supply Current vs Temperature

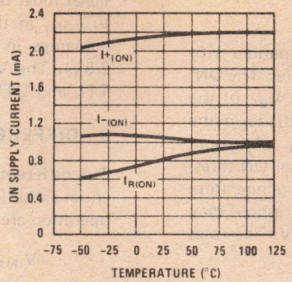

$r_{ds(ON)}$ vs Temperature AH0120 thru AH0140 Series

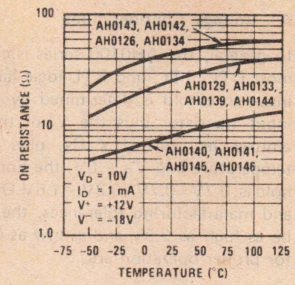

$r_{ds(ON)}$ vs Temperature AH0150/AH0160 Series

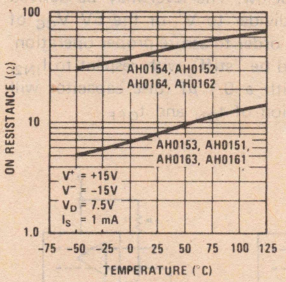

Leakage Current vs Temperature AH0120, AH0130, & AH0140

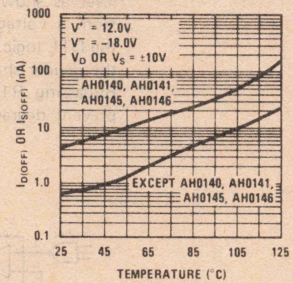

Leakage Current vs Temperature AH0150 & AH0160

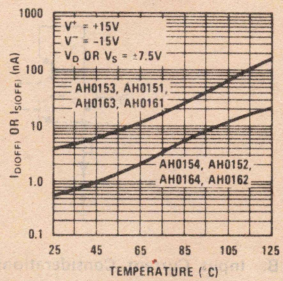

Single Ended Switch Input Threshold vs Temperature

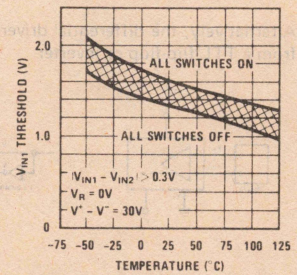

Differential Switch Input Threshold vs Temperature

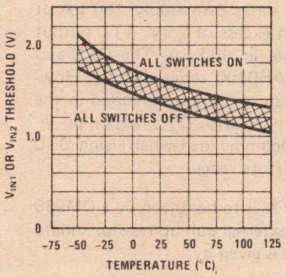

switching time test circuits

Single Ended Input

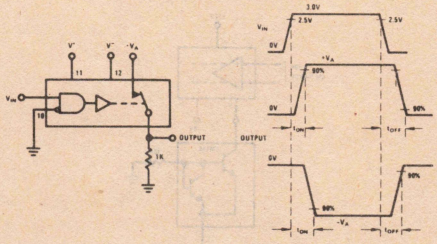

Differential Input

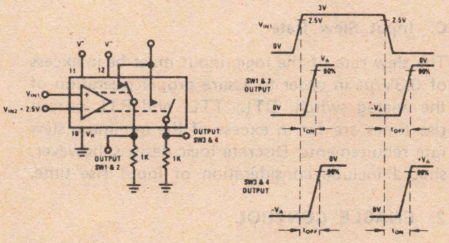

applications information

1. INPUT LOGIC COMPATIBILITY

A. Voltage Considerations

In general, the AH0100 series is compatible with most DTL, TTL, and RTL logic families. The ON-input threshold is determined by the V_{BE} of the input transistor plus the V_f of the diode in the emitter leg, plus $I \times R_1$, plus V_R. At room temperature and $V_R = 0V$, the nominal ON threshold is: 0.7V + 0.7V + 0.2V, = 1.6V. Over temperature and manufacturing tolerances, the threshold may be as high as 2.5V and as low as 0.8V. The rules for proper operation are:

$V_{IN} - V_R \geq 2.5V$ All switches ON

$V_{IN} - V_R \leq 0.8V$ All switches OFF

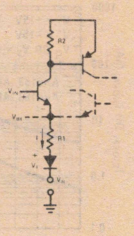

B. Input Current Considerations

$I_{IN(ON)}$, the current drawn by the driver with $V_{IN} = 2.5V$ is typically 20 μA at 25°C and is guaranteed less than 120 μA over temperature. DTL, such as the DM930 series can supply 180 μA at logic "1" voltages in excess of 2.5V. TTL output levels are comparable at 400 μA. The DTL and TTL can drive the AH0100 series directly. However, at low temperature, DC noise margin in the logic "1" state is eroded with DTL. A pull-up resistor of 10 kΩ is recommended when using DTL over military temperature range.

If more than one driver is to be driven by a DM930 series (6K) gate, an external pull-up resistor should be added. The value is given by:

$$R_P = \frac{11}{N-1} \text{ for } N > 2$$

where:

R_P = value of the pull-up resistor in kΩ

N = number of drivers.

C. Input Slew Rate

The slew rate of the logic input must be in excess of 0.3V/μs in order to assure proper operation of the analog switch. DTL, TTL, and RTL output rise times are far in excess of the minimum slew rate requirements. Discrete logic designs, however, should include consideration of input rise time.

2. ENABLE CONTROL

The application of a positive signal at the V_R terminal will open all switches. The V_R (ENABLE) signal must be capable of rising to within 0.8V of $V_{IN(ON)}$ in the OFF state and of sinking $I_{R(ON)}$ milliamps in the ON state (at $V_{IN(ON)} - V_R > 2.5V$). The V_R terminal can be driven from most TTL and DTL gates.

3. DIFFERENTIAL INPUT CONSIDERATIONS

The differential switch driver is essentially a differential amplifier. The input requirements for proper operation are:

$$|V_{IN1} - V_{IN2}| \geq 0.3V$$

$$2.5 \leq (V_{IN1} \text{ or } V_{IN2}) - V_R \leq 5V$$

The differential driver may be furnished by a DC level as shown below. The level may be derived from a voltage divider to V^+ or the 5V V_{CC} of the DTL logic. In order to assure proper operation, the divider should be "stiff" with respect to I_{IN2}. Bypassing R1 with a 0.1 μF disc capacitor will prevent degradation of t_{ON} and t_{OFF}.

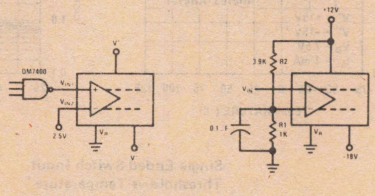

Alternatively, the differential driver may be driven from a TTL flip-flop or inverter.

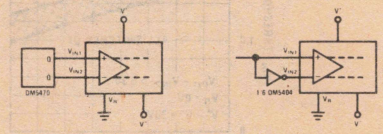

Connection of a 1 mA current source between V_R and V^- will allow operation over a ±10V common mode range. Differential input voltage must be less than the 6V breakdown, and input threshold of 2.5V and 300mV differential overdrive still prevail.

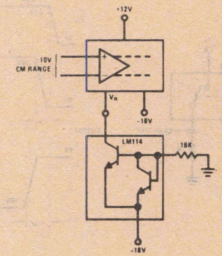

4. ANALOG VOLTAGE CONSIDERATIONS

The rules for operating the AH0100 series at supply voltages other than those specified essentially breakdown into OFF and ON considerations. The OFF considerations are dictated by the maximum negative swing of the analog signal and the pinch off of the JFET switch. In the OFF state, the gate of the FET is at $V^- + V_{BE} + V_{SAT}$ or about 1.0V above the V^- potential. The maximum V_P of the FET switches is 7V. The most negative analog voltage, V_A, swing which can be accomodated for any given supply voltage is:

$$|V_A| \leq |V^-| - V_P - V_{BE} - V_{SAT} \text{ or}$$

$$|V_A| \leq |V^-| - 8.0 \text{ or } |V^-| \geq |V_A| + 8.0V$$

For the standard high level switches, $V_A \leq |-18| + 8 = -10V$. The value for V^+ is dictated by the maximum positive swing of the analog input voltage. Essentially the collector to base junction of the turn-on PNP must remain reversed biased for all positive value of analog input voltage. The base of the PNP is at $V^+ - V_{SAT} - V_{BE}$ or $V^+ - 1.0V$. The PNP's collector base junction should have at least 1.0V reverse bias. Hence, the most positive analog voltage swing which may be accommodated for a given value of V^+ is:

$$V_A \leq V^+ - V_{SAT} - V_{BE} - 1.0V \text{ or}$$

$$V_A \leq V^+ - 2.0V \text{ or } V^+ \geq V_A + 2.0V$$

For the standard high level switches, $V_A = 12 - 2.0V = +10V$.

5. SWITCHING TRANSIENTS

Due to charge stored in the gate-to-source and gate-to-drain capacitances of the FET switch, transients may appear in the output during switching. This is particularly true during the OFF to ON transition. The magnitude and duration of the transient may be minimized by making source and load impedance levels as small as practical.

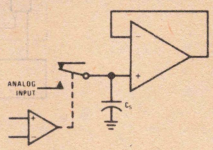

Furthermore, transients may be minimized by operating the switches in the differential mode; i.e., the charge delivered to the load during the ON to OFF transition is, to a large extent, cancelled by the OFF to ON transition.

typical applications

Programmable One Amp Power Supply

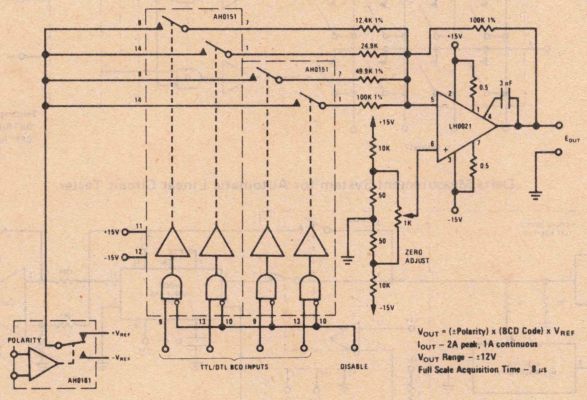

Four to Ten Bit D to A Converter (4 Bits Shown)

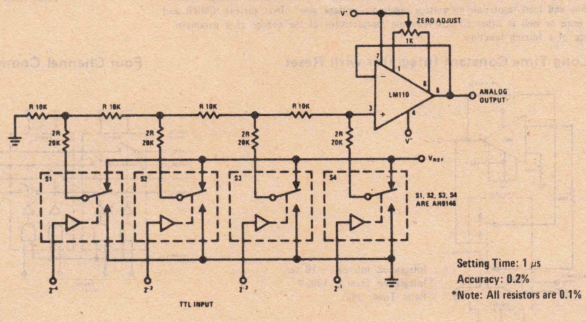

typical applications (con't)

Four Channel Differential Transducer Commutator

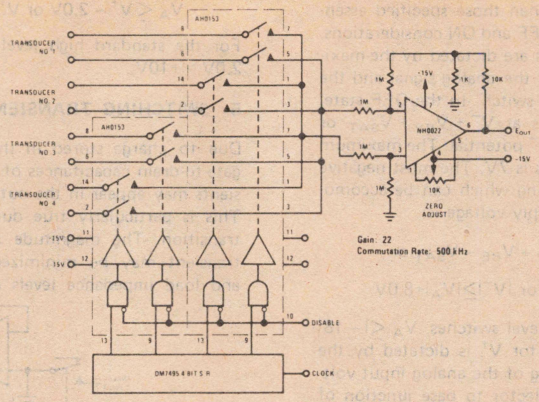

Gain: 22
Commutation Rate: 500 kHz

4 x 4 Cross Point Analog Switch

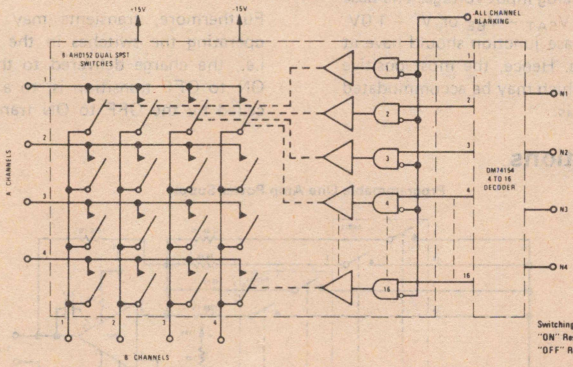

Switching Time – 800 ns
"ON" Resistance – 45Ω
"OFF" Resistance – 10^{10}Ω

Delta Measurement System for Automatic Linear Circuit Tester

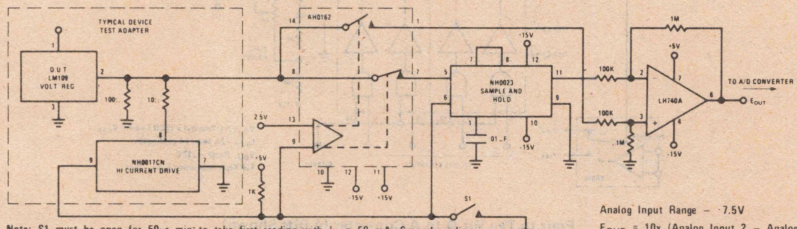

Analog Input Range – ±7.5V
E_{OUT} = 10x (Analog Input 2 – Analog Input 1)
Error Rate – 0.01% F.S./sec

Note: S1 must be open for 50μs min to take first reading with I_L = 50 mA. Second reading is taken with S2 closed. With S1 and other set-up forcing functions under computer control, system will measure line and load regulation on voltage regulators, voltage gain, offset current, CMRR and PSRR on op amps as well as other circuits requiring measurement of the change of a parameter with the change of a forcing function.

Precision Long Time Constant Integrator with Reset

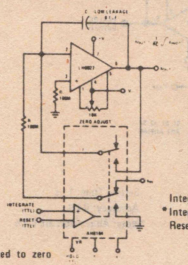

Integration Internal = 10 sec
*Integration Error = 100μV
Reset Time: 30μs

*Note: V_{OS} adjusted to zero

Four Channel Commutator

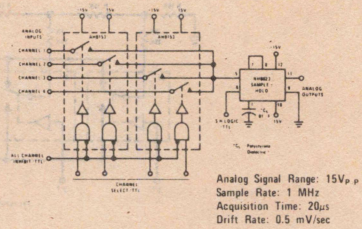

Analog Signal Range: $15V_{p-p}$
Sample Rate: 1 MHz
Acquisition Time: 20μs
Drift Rate: 0.5 mV/sec

National Semiconductor

Analog Switches

AH2114/AH2114C DPST Analog Switch

general description

The AH2114 is a DPST analog switch circuit comprised of two junction FET switches and their associated driver. The AH2114 is designed to fulfill a wide variety of high level analog switching applications including multiplexers, A to D Converters, integrators, and choppers. Design features include:

- Low ON resistance, typically 75Ω
- High OFF resistance, typically $10^{11}\Omega$
- Large output voltage swing, typically ±10V
- Powered from standard op-amp supply voltages of ±15V
- Input signals in excess of 1 MHz
- Turn-ON and turn-OFF times typically 1 μs

The AH2114 is guaranteed over the temperature range −55°C to +125°C whereas the AH2114C is guaranteed over the temperature range 0°C to +85°C.

schematic and connection diagrams

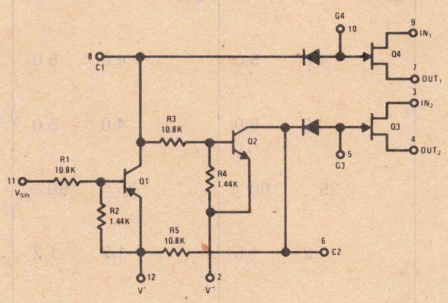

Metal Can Package

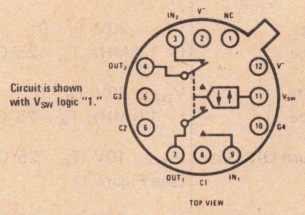

Circuit is shown with V_{SW} logic "1."

Order Number AH2114G or AH2114CG
See Package H12C

ac test circuit and waveforms

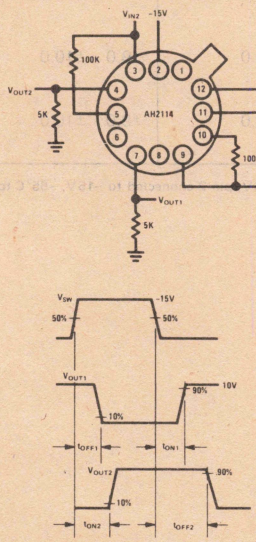

FIGURE 1.

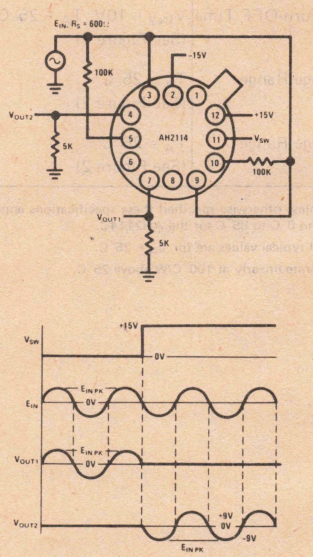

FIGURE 2.

absolute maximum ratings

Vplus Supply Voltage	+25V
Vminus Supply Voltage	−25V
Vplus−Vminus Differential Voltage	40V
Logic Input Voltage	25V
Power Dissipation (Note 3)	1.36W
Operating Temperature Range	
AH2114	−55°C to +125°C
AH2114C	0°C to +85°C
Storage Temperature Range	−65°C to +125°C
Lead Temperature (Soldering, 10 sec)	300°C

electrical characteristics (Notes 1 and 2)

PARAMETER	CONDITIONS	AH2114			AH2114C			UNITS
		MIN	TYP	MAX	MIN	TYP	MAX	
Static Drain-Source "On" Resistance	I_D = 1.0 mA, V_{GS} = 0V, T_A = 25°C		75	100		75	125	Ω
	I_D = 1.0 mA, V_{GS} = 0V			150			160	Ω
Drain-Gate Leakage Current	V_{DS} = 20V, V_{GS} = −7V, T_A = 25°C		0.2	1.0		0.2	5.0	nA
				60			60	nA
FET Gate-Source Breakdown Voltage	I_G = 1.0 μA, V_{DS} = 0V	35			35			V
Drain-Gate Capacitance	V_{DG} = 20V, I_S = 0, f = 1.0 MHz, T_A = 25°C		4.0	5.0		4.0	5.0	pF
Source-Gate Capacitance	V_{DG} = 20V, I_D = 0, f = 1.0 MHz, T_A = 25°C		4.0	5.0		4.0	5.0	pF
Input 1 Turn-ON Time	V_{IN1} = 10V, T_A = 25°C (See Figure 1)		35	60		35	60	ns
Input 2 Turn-ON Time	V_{IN2} = 10V, T_A = 25°C (See Figure 1)		1.2	1.5		1.2	1.2	μs
Input 1 Turn-OFF Time	V_{IN1} = 10V, T_A = 25°C (See Figure 1)		0.6	0.75		0.6	0.75	μs
Input 2 Turn-OFF Time	V_{IN2} = 10V, T_A = 25°C (See Figure 1)		50	80		50	80	ns
DC Voltage Range	T_A = 25°C (See Figure 2)	±9.0	±10.0		±9.0	±10.0		V
AC Voltage Range	T_A = 25°C (See Figure 2)	±9.0	±10.0		±9.0	±10.0		V

Note 1: Unless otherwise specified these specifications apply for pin 12 connected to +15V, pin 2 connected to −15V, −55°C to 125°C for the AH2114, and 0°C to 85°C for the AH2114C.

Note 2: All typical values are for T_A = 25°C.

Note 3: Derate linearly at 100°C/W above 25°C.

Section 9

MOS Clock Drivers

9

Section 9. MOS Clock Drivers

Features	V_{OUT} (Max)	I_{OUT} (Max)	PRF	t_{ON}	t_{OFF}	Part Number −55°C to 125°C	Part Number −25°C to 85°C	Page Number
Single Phase, DC Coupled	30 V	0.3 A	≤ 5 MHz	50 ns	75 ns	MH0007	MH0007	9-4
Two Phase, DC Coupled	30 V	0.5 A	≤ 2 MHz	35 ns	60 ns	MH0009	MH0009C	9-6
Single Phase, DC Coupled	30 V	1.0 A	≤ 10 MHz	15 ns	50 ns	MH0012	MH0012C	9-8
Two Phase, AC Coupled	30 V	0.5 A	≤ 2 MHz	35 ns	60 ns	MH0013	MH0013C	9-10
Two Phase, AC Coupled	30 V	0.5 A	≤ 1 MHz	30 ns	60 ns	DS0025	DS0025C	9-14
Two Phase, AC Coupled	20 V	1.5 A	≤ 5 MHz	12 ns	15 ns	DS0026	DS0026C	9-17

Note: Refer to Application Note AN-76 for additional information on clock drivers. For additional interface product information, refer to the *Interface Databook*.

National Semiconductor

MH0007/MH0007C DC Coupled MOS Clock Driver

general description

The MH0007 is a voltage translator and power booster designed for interfacing between conventional TTL or DTL voltage levels and those levels associated with inputs or clocks of MOS FET type devices. The design allows the user a wide latitude in selection of supply voltages, and is especially useful in normally "off" applications, since power dissipation is typically only 5 milliwatts in the "off" state.

features

- 30 volts (max) output swing
- Standard 5V power supply
- Peak currents in excess of ±300 mA available
- Compatible with all MOS devices
- High speed: 5 MHz with nominal load
- External trimming possible for increased performance

schematic and connection diagram

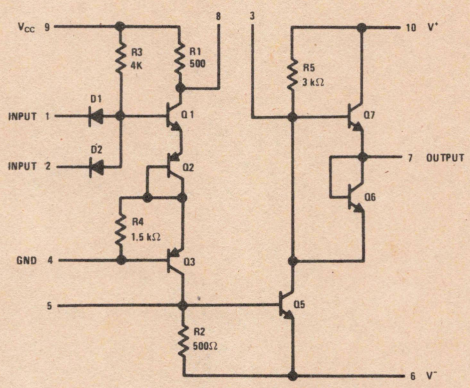

10 Pin TO-100 Package

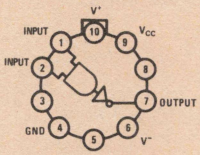

TOP VIEW

Order Number MH0007H or MH0007CH
See Package H10E

typical applications

Switching Time Test Configuration

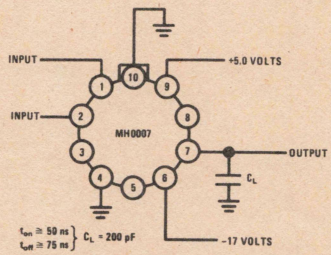

High Speed Operation

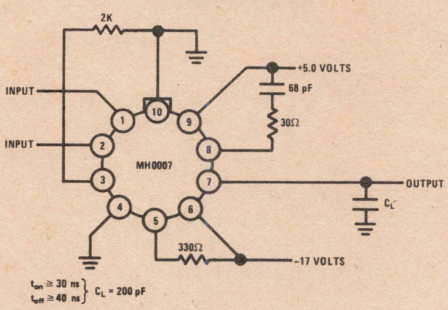

absolute maximum ratings

V_{CC} Supply Voltage	8V
V^- Supply Voltage	−40V
V^+ Supply Voltage	+28V
$(V^+ - V^-)$ Voltage Differential	30V
Input Voltage	5.5V
Power Dissipation (T_A = 25°C)	800 mW
Peak Output Current	±500 mA
Storage Temperature Range	−65°C to +150°C
Operating Temperature Range MH0007	−55°C to +125°C
MH0007C	0°C to +85°C
Lead Temperature (Soldering, 10 sec)	300°C

electrical characteristics (Note 1)

PARAMETER	CONDITIONS	MIN	TYP (Note 2)	MAX	UNITS
Logical "1" Input Voltage	V_{CC} = 4.5V	2.2			V
Logical "0" Input Voltage	V_{CC} = 4.5V			0.8	V
Logical "1" Input Current	V_{CC} = 5.5V, V_{IN} = 5.5V			100	μA
Logical "0" Input Current	V_{CC} = 5.5V, V_{IN} = 0.4V		1.0	1.5	mA
Logical "1" Output Voltage	V_{CC} = 5.5V, I_{OUT} = 30 mA, V_{IN} = 0.8V	V^+ − 4.0			V
	V_{CC} = 5.5V, I_{OUT} = 1 mA, V_{IN} = 0.8V	V^+ − 2.0			V
Logical "0" Output Voltage	V_{CC} = 4.5V, I_{OUT} = 30 mA, V_{IN} = 2.2V			V^- + 2.0	V
Transition Time to Logical "0" Output	C_L = 200 pF (Note 3)		50		ns
Transition Time to Logical "1" Output	C_L = 200 pF (Note 3)		75		ns

Note 1: Min/max limits apply across the guaranteed range of −55°C to +125°C for the MH0007, and from 0°C to +85°C for the MH0007C, for all allowable values of V^- and V^+

Note 2: All typical values measured at T_A = 25°C with V_{CC} = 5.0 volts, V^- = −25 volts, V^+ = 0 volts.

Note 3: Transition time measured from time V_{IN} = 50% value until V_{OUT} has reached 80% of final value.

Allowable Values for V^- and V^+

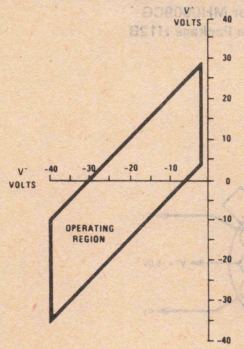

Maximum Power Dissipation

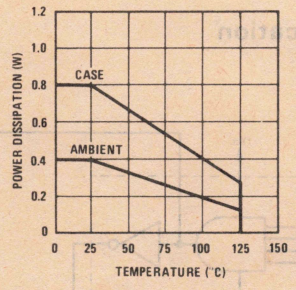

National Semiconductor

MOS Clock Drivers

MH0009/MH0009C DC Coupled Two Phase MOS Clock Driver

general description

The MH0009/MH0009C is high speed, DC coupled, dual MOS clock driver designed to operate in conjunction with high speed line drivers such as the DM8830, DM7440, or DM7093. The transition from TTL/DTL to MOS logic level is accomplished by PNP input transistors which also assure accurate control of the output pulse width.

features

- DC logically controlled operation
- Output Swings – to 30V
- Output Currents – in excess of ±500 mA
- High rep rate – in excess of 2 MHz
- Low standby power

schematic and connection diagrams

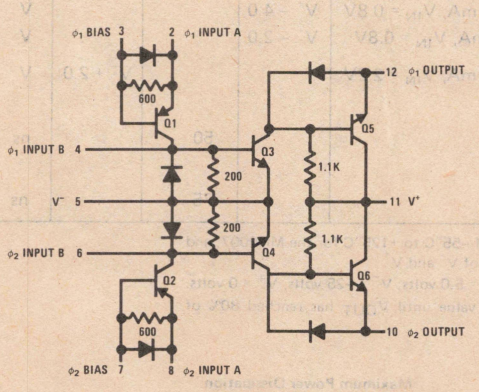

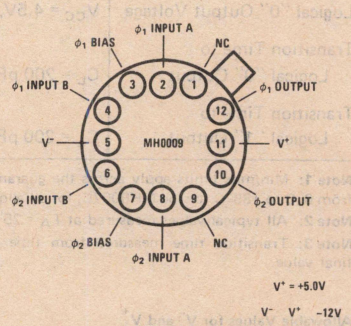

Order Number MH0009G or MH0009CG
See Package H12B

typical application

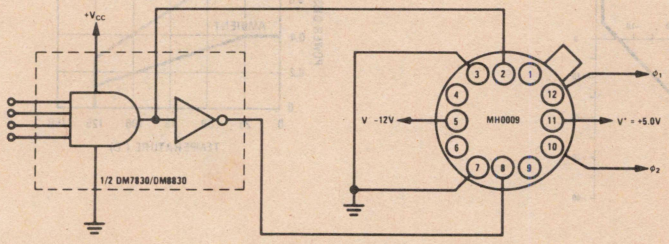

FIGURE 1

absolute maximum ratings

V^- Supply Voltage: Differential (Pin 5 to Pin 3) or (Pin 5 to Pin 7)	−40V
V^+ Supply Voltage: Differential (Pin 11 to Pin 5)	30V
Input Current: (Pin 2, 4, 6 or 8)	±75 mA
Peak Output Current	±500 mA
Power Dissipation (Note 2 and Figure 2)	1.5W
Storage Temperature	−65°C to +150°C
Operating Temperature: MH0009	−55°C to +125°C
MH0009C	0°C to 85°C
Lead Temperature (Soldering, 10 Sec.)	300°C

electrical characteristics (Note 1)

PARAMETER	CONDITIONS	MIN	TYP	MAX	UNITS
t_{ON}	C_{IN} = .0022 μF C_L = .001 μF		10	35	ns
t_{rise}	C_{IN} = .0022 μF C_L = .001 μF		40	50	ns
Pulse Width (50% to 50%)	C_{IN} = .0022 μF C_L = .001 μF	340	400	440	ns
t_{fall}	C_{IN} = .0022 μF C_L = .001 μF		80	120	ns
t_{delay}	C_{IN} = 600 pF C_L = 200 pF		10		ns
t_{rise}	C_{IN} = 600 pF C_L = 200 pF		15		ns
Pulse Width (50% to 50%)	C_{IN} = 600 pF C_L = 200 pF	40	70	120	ns
t_{fall}	C_{IN} = 600 pF C_L = 200 pF		40		ns

Note 1: Characteristics apply for circuit of Figure 1. With V^- = −20 volts; V^+ = 0 volts; V_{CC} = 5.0 volts. Minimum and maximum limits apply from −55°C to +125°C for the MH0009 and from 0°C to +85°C for the MH0009C. Typical values are for T_A = 25°C.
Note 2: Transient power is given by $P = fC_L (V^+ - V^-)^2$ watts, where: f = repetition rate, C_L = load capacitance, and $(V^+ - V^-)$ = output swing.
Note 3: For typical performance data see the MH0013/MH0013C data sheet.

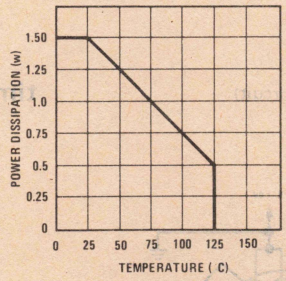

FIGURE 2. Maximum Power Dissipation

National Semiconductor

MH0012/MH0012C High Speed MOS Clock Driver

general description

The MH0012/MH0012C is a high performance clock driver that is designed to be driven by the DM7830/DM8830 or other line drivers or buffers with high output current capability. It will provide a fixed width pulse suitable for driving MOS shift registers and other clocked MOS devices.

features

- High output voltage swings—12 to 30 volts
- High output current drive capability—1000 mA peak
- High repetition rate—10 MHz at 18 volts into 100 pF
- Low standby power—less than 30 mW

schematic and connection diagrams

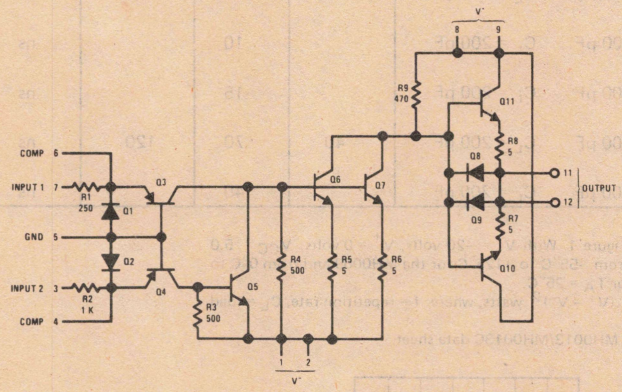

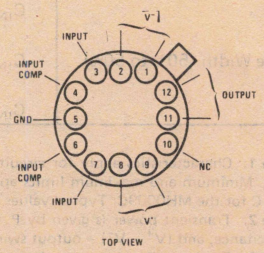

Order Number MH0012G or MH0012CG
See Package H12B

typical application (ac test circuit)

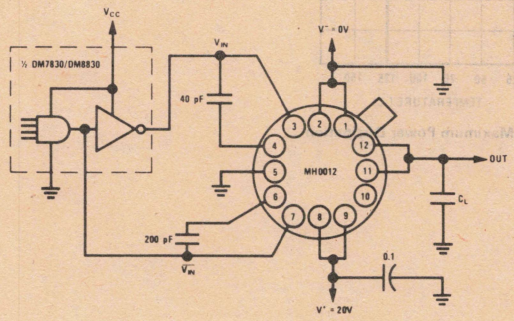

timing diagram

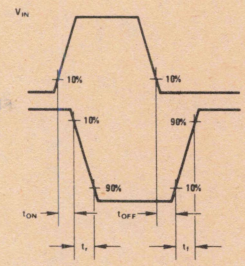

absolute maximum ratings

V^- Supply Voltage: Differential (Pin 1 or 2 to Pin 5)	-40V
V^+ Supply Voltage: Differential (Pin 8 or 9 to Pin 1 or 2)	30V
Input Current: (Pin 3 or 7)	±75 mA
Peak Output Current	±1000 mA
Maximum Output Load – See Figure 2	
Power Dissipation – See Figure 1	1.5W
Storage Temperature	-65°C to +150°C
Operating Temperature: MH0012	-55°C to +125°C
MH0012C	0°C to +85°C
Lead Temperature (Soldering, 10 sec)	300°C

dc electrical characteristics (Note 1)

PARAMETER	CONDITIONS	MIN	TYP	MAX	UNITS
Logic "1" Input Voltage (Pins 7 and 3)	$V^+ - V^- = 20V$, $V_{OUT} < V^- + 2V$		1.0	2.0	V
Logic "0" Input Voltage (Pins 7 and 3)	$V^+ - V^- = 20V$, $V_{OUT} > V^+ - 1.5V$	0.4	0.6		V
Logic "1" Output Voltage	$V^+ - V^- = 20V$, $I_{OUT} = 1mA$, $V_{IN} = 2.0V$		$V^- + 1.0$	$V^- + 2.0$	V
Logic "0" Output Voltage	$V^+ - V^- = 20V$, $I_{OUT} = -1mA$, $V_{IN} = 0.4V$	$V^+ - 1.5$	$V^+ - 0.7$		V
I_{DC} (V^- Supply)	$V^+ - V^- = 20V$, $V_{IN} = 2.0V$		34	60	mA

ac electrical characteristics

PARAMETER	CONDITIONS (Note 3)	MIN	TYP	MAX	UNITS
Turn-On Delay (t_{ON})	$V^+ - V^- = 20V$, $V_{CC} = 5.0V$, $C_L = 200$ pF, f = 1.0 MHz, $T_A = 25°C$		10	15	ns
Rise Time (t_r)			5	10	ns
Turn-Off Delay (t_{OFF})			35	50	ns
Fall Time (t_f)			35	45	ns

Note 1: Characteristics apply for circuit of Figure 1. Min and max limits apply from -55°C to +125°C for the MH0012 and from 0°C to +85°C for the MH0012C. Typical values are for $T_A = 25°C$.

Note 2: Due to the very fast rise and fall times, and the high currents involved, extremely short connections and good by passing techniques are required.

Note 3: All conditions apply for each parameter.

Power Dissipation

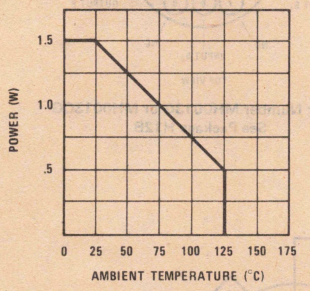

Figure 1.

Maximum Output Load vs Voltage Swing vs Rise Times

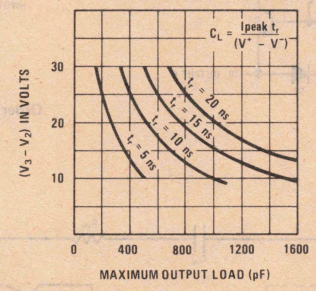

Figure 2.

Rise and Fall Times vs Load Capacitance

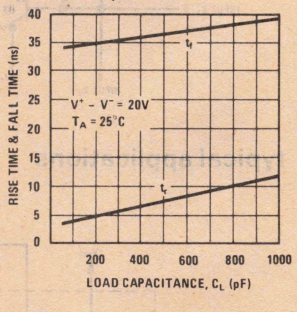

applications information

Power Dissipation Considerations

The power dissipated by the MH0012 may be divided into three areas of operation = ON, OFF and switching. The OFF power is approximately 30 mW and is dissipated by R_2 when Pin 3 is in the logic "1" state. The OFF power is neglible and will be ignored in the subsequent discussion. The ON power is dissipated primarily by Q_3 and R_9 and is given by:

$$P_{ON} \cong [|V^-| I_{IN} + \frac{(V^+ - V^-)^2}{R_9}]\ DC \qquad (1)$$

Where:

$$DC = \text{Duty Cycle} = \frac{\text{ON Time}}{\text{ON Time \& OFF Time}}$$

I_{IN} is given by $\frac{V_{IN} - V_{BE3}}{R_1}$ and equation (1) becomes:

$$P_{ON} = \left[\frac{(V_{IN} - V_{BE3})|V^-|}{R_1} + \frac{(V^+ - V^-)^2}{R_9}\right] DC \qquad (2)$$

For $V_{IN} = 2.5V$, $V_{BE3} = 0.7V$, $V^+ = 0V$, $V^- = -20V$, and DC = 20%, $P_{ON} \cong 200$ mW.

The transient power incurred during switching is given by:

$$P_{AC} = (V^+ - V^-)^2\, C_L f \qquad (3)$$

For $V^+ = 0V$, $V^- = -20V$, $C_L = 200$ pF, and f = 5.0 MHz, $P_{AC} = 400$ mW.

The total power is given by:

$$P_T = P_{AC} + P_{ON} \qquad (4)$$

$$P_T \leq P_{MAX}$$

For the above example, $P_T = 600$ mW.

National Semiconductor

MH0013/MH0013C Two Phase MOS Clock Driver

general description

The MH0013/MH0013C is a general purpose clock driver that is designed to be driven by DTL or TTL line drivers or buffers with high output current capability. It will provide fixed width clock pulses for both high threshold and low threshold MOS devices. Two external input coupling capacitors set the pulse width maximum, below which the output pulse width will closely follow the input pulse width or logic control of output pulse width may be obtained by using larger value input capacitors and no input resistors.

features

- High Output Voltage Swings—up to 30V
- High Output Current Drive Capability—up to 500 mA
- High Repetition Rate—up to 5.0 MHz
- Pin Compatible with the MH0009/MH0009C
- "Zero" Quiescent Power

schematic and connection diagrams

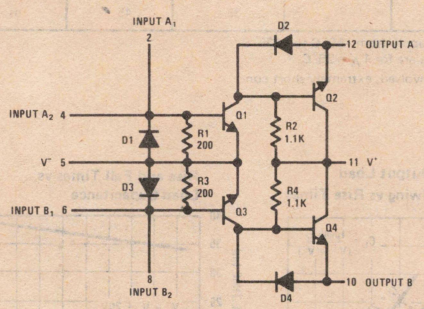

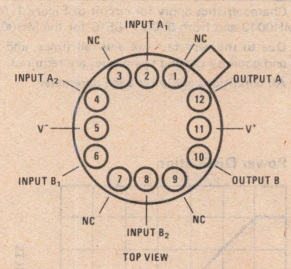

Order Number MH0013G or MH0013CG
See Package H12B

typical applications

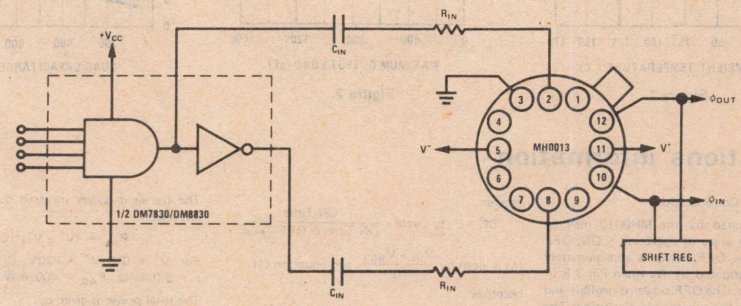

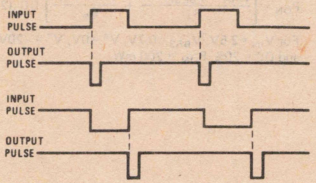

absolute maximum ratings

$(V^+ - V^-)$ Voltage Differential	30V
Input Current (Pin 2, 4, 6 or 8)	±75 mA
Peak Output Current	±600 mA
Power Dissipation (Figure 7)	1.5W
Storage Temperature	−65°C to +150°C
Operating Temperature MH0013	−55°C to +125°C
MH0013C	0°C to +85°C
Lead Temperature (Soldering, 10 sec 1/16" from Case)	300°C

electrical characteristics (Note 1 and Figure 8)

PARAMETER	CONDITIONS	MIN	TYP	MAX	UNITS
Logical "0" Output Voltage	I_{OUT} = −50 mA I_{IN} = 1.0 mA	$V^+ - 3.0$	$V^+ - 1.0$		V
	I_{OUT} = −10 mA I_{IN} = 1.0 mA		$V^+ - 0.7$	$V^+ - 0.5$	V
Logical "1" Output Voltage	I_{OUT} = 50 mA I_{IN} = 10 mA		$V^- + 1.5$	$V^- + 2.0$	V
					V
Power Supply Leakage Current	$(V^+ - V^-)$ = 30V $I_{OUT} = I_{IN}$ = 0 mA		1.0	100	μA
Negative Input Voltage Clamp	I_{IN} = −10 mA	$V^- - 1.2$	$V^- - 0.8$		V
$t_{d\,ON}$			20	35	ns
t_{rise}	C_{IN} = 0.0022 μF		35	50	ns
$t_{d\,OFF}$ (Note 2)	R_{IN} = 0Ω		30	60	ns
t_{fall} (Note 2)	C_L = 0.001 μF	40	50	80	ns
t_{fall} (Note 3)		40	70	120	ns
Pulse Width (50% to 50%) (Note 3)		340	420	490	ns
t_{rise}	C_{IN} = 500 pF		15		ns
t_{fall}	R_{IN} = 0Ω		20		ns
Pulse Width (50% to 50%) (Note 3)	C_L = 200 pF		110		ns
Positive Output Voltage Swing			$V^+ - 0.7V$		V
Negative Output Voltage Swing			$V^- + 0.7V$		V

Note 1: Min/Max limits apply over guaranteed operating temperature range of −55°C to +125°C for MH0013 and 0°C to +85°C for MH0013C, with V^- = −20V and V^+ = 0V unless otherwise specified. Typical values are for 25°C.

Note 2: Parameter values apply for clock pulse width determined by input pulse width.

Note 3: Parameter values apply for input pulse width greater than output clock pulse width.

TABLE I. Typical Drive Capability of One Half MH0013 at 70°C Ambient

$(V_3 - V_2)$ VOLTS	FREQUENCY MHz	PULSE WIDTH ns	TYPICAL R_{IN} Ω	TYPICAL C_{IN} pF	OUTPUT DRIVE CAPABILITY IN pF[1]	RISE TIME LIMIT ns[2]
28					50	–
20	4.0	100	0	750	200	7
16					350	10
28					100	5
20	2.0	200	10	1600	400	14
16					700	19
28					400	19
20	1.0	200	0	2300	1000	34
16					1700	45
28					2800	130
20	0.5	500	10	4000	5500	183
16					9300	248

Note 1: Output load is the maximum load that can be driven at 70°C without exceeding the package rating under the given conditions.

Note 2: The rise time given is the minimum that can be used without exceeding the peak transient output current for the full rated output load.

circuit operation

Input current forced into the base of Q1 through the coupling capacitor C_{IN} causes Q1 to be driven into saturation, swinging the output to $V^- + V_{CE}(SAT) + V_{DIODE}$.

When the input current has decayed, or has been switched, such that Q1 turns off, Q2 receives base drive through R2, turning Q2 on. This supplies current to the load and the output swings positive to $V^+ - V_{BE}$.

It may be noted that Q1 always switches off before Q2 begins to supply current; hence, high internal transient currents from V^+ to V^- cannot occur.

typical performance characteristics

FIGURE 1. Output Load vs Voltage Swing

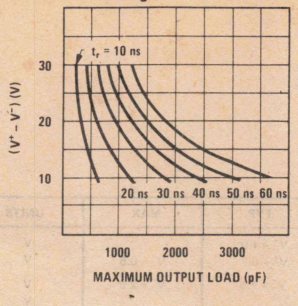

FIGURE 2. Transient Power vs Rep. Rate vs C_L

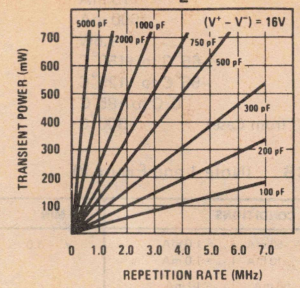

FIGURE 3. Transient Power vs Rep. Rate vs C_L

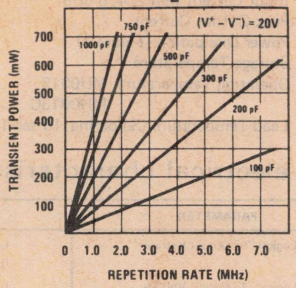

FIGURE 4. Average Internal Power vs Output Swing vs Duty Cycle

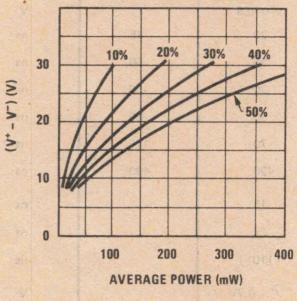

FIGURE 5. Typical Clock Pulse Variations vs Ambient Temperature

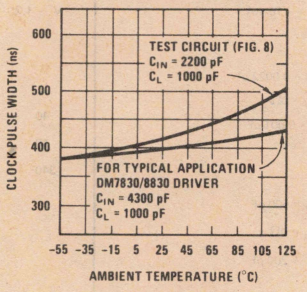

FIGURE 6. R_{IN} vs C_{IN} vs Pulse Width

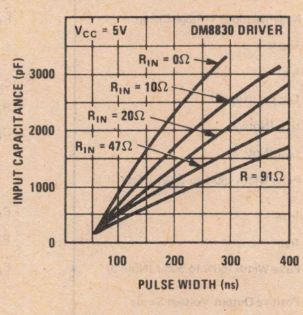

FIGURE 7. Package Power Derating

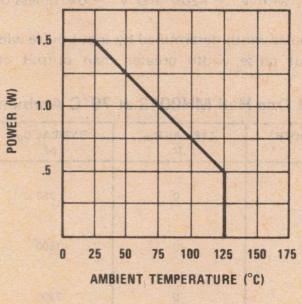

ac test circuit

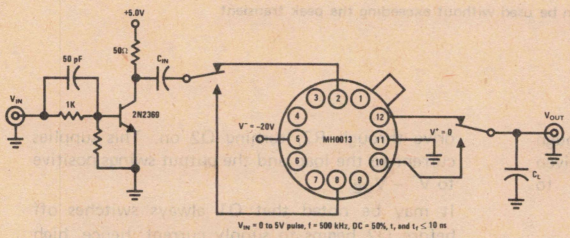

Figure 8

timing diagram

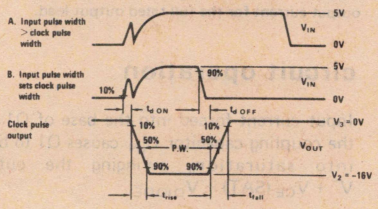

pulse width

Maximum output pulse width is a function of the input driver characteristics and the coupling capacitance and resistance. After being turned on, the input current must fall from its initial value I_{IN} peak to below the input threshold current I_{IN} min $\simeq V_{BE}/R1$ for the clock driver to turn off. For example, referring to the test circuit of Figure 8, the output pulse width, 50% to 50%, is given by

$$pw_{OUT} \cong \frac{1}{2}(t_{rise} + t_{fall})$$

$$+ R_O C_{IN} \ln \frac{I_{IN}\ peak}{I_{IN}\ min} \cong 400\ ns.$$

For operation with the input pulse shorter than the above maximum pulse width, the output pulse width will be directly determined by the input pulse width.

$$pw_{OUT} = pw_{IN} + t_{d\,OFF} + t_{d\,ON} + \frac{1}{2}(t_{fall} + t_{rise})$$

Typical maximum pulse width for various C_{IN} and R_{IN} values are given in Figure 6.

fan-out calculation

The drive capability of the MH0013 is a function of system requirements, i.e., speed, ambient temperature, voltage swing, drive circuitry, and stray wiring capacity.

The following equations cover the necessary calculations to enable the fan-out to be calculated for any system condition. Some typical fan-outs for conditions are given in Table 1.

Transient Current

The maximum peak output current of the MH0013 is given as 600 mA. Average transient current required from the driver can be calculated from:

$$I = \frac{C_L (V^+ - V^-)}{T_R} \qquad (1)$$

This can give a maximum limit to the load.

Figure 1 shows maximum voltage swing and capacitive load for various rise times.

1. *Transient Output Power*

The average transient power (P_{AC}) dissipated is equal to the energy needed to charge and discharge the output capacitive load (C_L) multiplied by the frequency of operation (F).

$$P_{AC} = C_L \times (V^+ - V^-)^2 \times F \qquad (2)$$

Figures 2 and 3 show transient power for two different values of $(V^+ - V^-)$ versus output load and frequency.

2. *Internal Power*

"0" State

Negligible (<3 mW)

"1" State

$$P_{INT} = \frac{(V^+ - V^-)^2}{R_2} \times \text{Duty Cycle.} \qquad (3)$$

Figure 4 gives various values of internal power versus ouptut voltage and duty cycle.

3. *Input Power*

The average input power is a function of the input current and duty cycle. Due to input voltage clamping, this power contribution is small and can therefore be neglected. At maximum duty cycle of 50%, at 25°C, the average input power is less than 10 mW per phase for $R_{IN}C_{IN}$ controlled pulse widths. For pulse widths much shorter than $R_{IN}C_{IN}$, and maximum duty cycle of 50%, input power could be as high as 30 mW, since I_{IN} peak is maintained for the full duration of the pulse width.

4. *Package Power Dissipation*

Total Average Power = Transient Output Power + Internal Power + Input Power

Typical Example *Calculation for One Half MH0013C*

How many MM506 shift registers can be driven by an MH0013C driver at 1 MHz using a clock pulse width of 400 ns, rise time 30–50 ns and 16 volts amplitude over the temperature range 0–70°C?

Power Dissipation

From the graph of power dissipation versus temperature, Figure 7, it can be seen that an MH0013C at 70°C can dissipate 1W without a heat sink; therefore, each half can dissipate 500 mW.

Transient Peak Current Limitation

From Figure 1 (equation 1), it can be seen that at 16V and 30 ns, the maximum load that can be driven is limited to 1140 pF.

Average Internal Power

Figure 4 (equation 3) gives an average power of 102 mW at 16V 40% duty cycle.

Input power will be a maximum of 8 mW.

Transient Output Power

For one half of the MH0013C

500 mW = 102 mW + 8 mW
+ transient output power

390 mW = transient output power

Using Figure 2 (equation 2) at 16V, 1 MHz and 390 mW, each half of the MH0013C can drive a 1520 pF load. This is, however, in excess of the load derived from the transient current limitation (Figure 1, equation 1), and so a maximum load of 1140 pF would prevail.

From the data sheet for the MM506, the average clock pulse load is 80 pF. Therefore the number of devices driven is $\frac{1140}{80}$ or 14 registers.

For nonsymmetrical clock widths, drive capability is improved.

National Semiconductor

DS0025/DS0025C Two-Phase MOS Clock Driver

general description

The DS0025/DS0025C is monolithic, low cost, two phase MOS clock driver that is designed to be driven by TTL/DTL line drivers or buffers such as the DM932, DS8830 or DM7440. Two input coupling capacitors are used to perform the level shift from TTL/DTL to MOS logic levels. Optimum performance in turn-off delay and fall time are obtained when the output pulse is logically controlled by the input. However, output pulse widths may be set by selection of the input capacitors eliminating the need for tight input pulse control.

features

- 8-lead TO-5 or 8-lead dual-in-line package
- High Output Voltage Swings—up to 30V
- High Output Current Drive Capability—up to 1.5A
- Rep. Rate: 1.0 MHz into > 1000 pF
- Driven by DM932, DS8830, DM7440 (SN7440)
- "Zero" Quiescent Power

connection diagrams

Metal Can Package

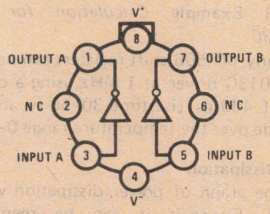

Note: Pin 4 connected to case.

TOP VIEW

Order Number DS0025H or DS0025CH
See NS Package H08C

Dual-In-Line Package

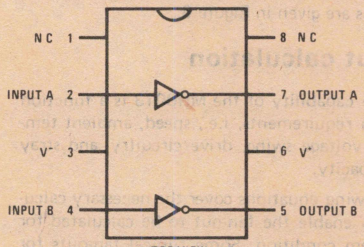

TOP VIEW

Order Number DS0025CN-8
See NS Package N08A

typical application

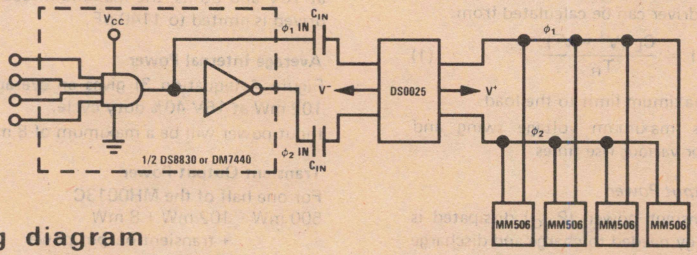

timing diagram

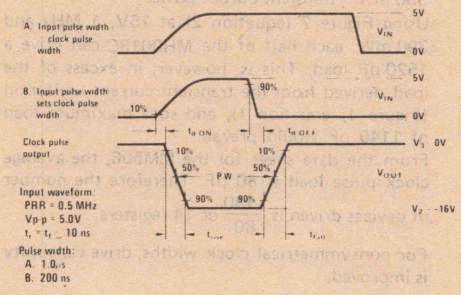

ac test circuit

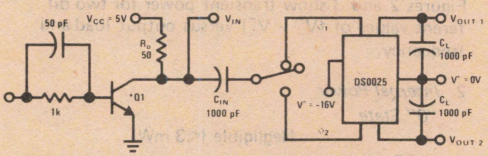

*Q1 is selected high speed NPN switching transistor.

absolute maximum ratings (Note 1)

(V^+ – V^-) Voltage Differential	30V
Input Current	100 mA
Peak Output Current	1.5A
Storage Temperature	–65°C to +150°C
Operating Temperature DS0025	–55°C to +125°C
DS0025C	0°C to +85°C
Lead Temperature (Soldering, 10 sec)	300°C

electrical characteristics (Notes 2 and 3) See test circuit.

	PARAMETER	CONDITIONS		MIN	TYP	MAX	UNITS
t_{dON}	Turn-On Delay Time	C_{IN} = 0.001μF, R_{IN} = 0Ω, C_L = 0.001μF			15	30	ns
t_{RISE}	Rise Time	C_{IN} = 0.001μF, R_{IN} = 0Ω, C_L = 0.001μF			25	50	ns
t_{dOFF}	Turn-Off Delay Time	C_{IN} = 0.001μF, R_{IN} = 0Ω, C_L = 0.001μF, (Note 4)			30	60	ns
t_{FALL}	Fall Time	C_{IN} = 0.001μF, R_{IN} = 0Ω,	(Note 4)	60	90	120	ns
		C_L = 0.001μF	(Note 5)	100	150	250	ns
PW	Pulse Width (50% to 50%)	C_{IN} = 0.001μF, R_{IN} = 0Ω, C_L = 0.001μF (Note 5)			500		ns
V_{O+}	Positive Output Voltage Swing	V_{IN} = 0V, I_{OUT} = –1 mA		V^+–1.0	V^+–0.7V		V
V_{O-}	Negative Output Voltage Swing	I_{IN} = 10 mA, I_{OUT} = 1 mA			V^-+0.7V	V^-+1.5V	V

Note 1: "Absolute Maximum Ratings" are those values beyond which the safety of the device cannot be guaranteed. Except for "Operating Temperature Range" they are not meant to imply that the devices should be operated at these limits. The table of "Electrical Characteristics" provides conditions for actual device operation.

Note 2: Unless otherwise specified min/max limits apply across the –55°C to +125°C temperature range for the DS0025 and across the 0°C to +70°C range for the DS0025C.

Note 3: All currents into device pins shown as positive, out of device pins as negative, all voltages referenced to ground unless otherwise noted. All values shown as max or min on absolute value basis.

Note 4: Parameter values apply for clock pulse width determined by input pulse width.

Note 5: Parameter values for input pulse width greater than output clock pulse width.

typical performance

Transient Power vs Rep. Rate

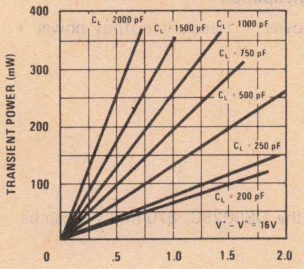

$P_{AC} = (V^+ - V^-)^2 f C_L$

DC Power (P_{DC}) vs Duty Cycle

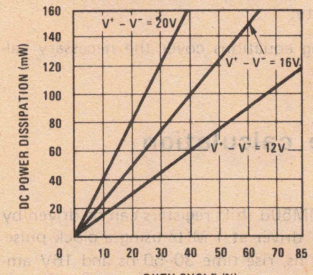

$P_{DC} = \frac{(V^+ - V^-)^2 (DC)}{1k}$

Maximum Load Capacitance

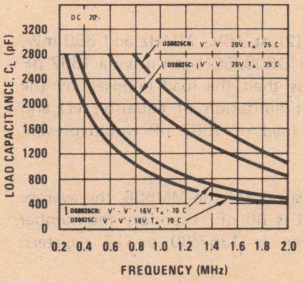

$$C_L \leq \frac{(P_{MAX})(1k) - (V^+ - V^-)^2 (DC)}{(f)(1k)(V^+ - V^-)^2} \leq \frac{(I_{pk})(t_r)}{V^+ - V^-}$$

Output PW Controlled by C_{IN}

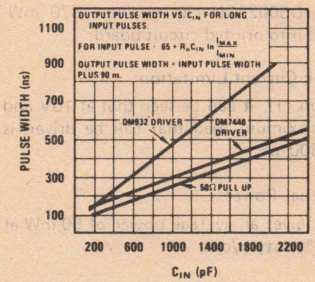

I_{MAX} = Peak current delivered by driver

$I_{MIN} \cong \frac{V_{BE}}{R1} = \frac{0.6}{1k}$

applications information

Circuit Operation

Input current forced into the base of Q_1 through the coupling capacitor C_{IN} causes Q_1 to be driven into saturation, swinging the output to $V^- + V_{CE}(sat) + V_{Diode}$.

When the input current has decayed, or has been switched, such that Q_1 turns off, Q_2 receives base drive through R_2, turning Q_2 on. This supplies current to the load and the output swings positive to $V^+ - V_{BE}$.

It may be noted that Q_1 must switch off before Q_2 begins to supply current, hence high internal transients currents from V^- to V^+ cannot occur.

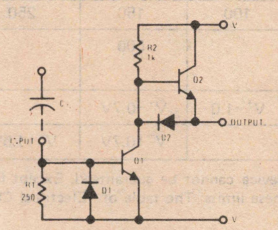

FIGURE 1. DS0025 Schematic (One-Half Circuit)

Fan-Out Calculation

The drive capability of the DS0025 is a function of system requirements, i.e. speed, ambient temperature, voltage swing, drive circuitry, and stray wiring capacity.

The following equations cover the necessary calculations to enable the fan-out to be calculated for any system condition.

Transient Current

The maximum peak output current of the DS0025 is given as 1.5A. Average transient current required from the driver can be calculated from:

$$I = \frac{C_L (V^+ - V^-)}{t_r} \qquad (1)$$

Typical rise times into 1000 pF load is 25 ns For $V^+ - V^- = 20V$, $I = 0.8A$.

Transient Output Power

The average transient power (P_{ac}) dissipated, is equal to the energy needed to charge and discharge the output capacitive load (C_L) multiplied by the frequency of operation (f).

$$P_{AC} = C_L \times (V^+ - V^-)^2 \times f \qquad (2)$$

For $V^+ - V^- = 20V$, $f = 1.0$ MHz, $C_L = 1000$ pF, $P_{AC} = 400$ mW.

Internal Power

"0" State Negligible (<3 mW)

"1" State

$$P_{int} = \frac{(V^+ - V^-)^2}{R_2} \times \text{Duty Cycle} \qquad (3)$$

$$= 80 \text{ mW for } V^+ - V^- = 20V, \text{ DC} = 20\%$$

Package Power Dissipation

Total average power = transient output power + internal power

example calculation

How many MM506 shift registers can be driven by a DS0025CN driver at 1 MHz using a clock pulse width of 200 ns, rise time 30-50 ns and 16V amplitude over the temperature range 0-70°C?

Power Dissipation:

At 70°C the DS0025CN can dissipate 870 mW when soldered into printed circuit board.

Transient Peak Current Limitation:

From equation (1), it can be seen that at 16V and 30 ns, the maximum load that can be driven is limited to 2800 pF.

Average Internal Power:

Equation (3), gives an average power of 50 mW at 16V and a 20% duty cycle.

For one-half of the DS0025C, 870 mW ÷ 2 can be dissipated.

435 mW = 50 mW + transient output power

385 mW = transient output power

Using equation (2) at 16V, 1 MHz and 350 mW, each half of the DS0025CN can drive a 1367 pF load. This is less than the load imposed by the transient current limitation of equation (1) and so a maximum load of 1367 pF would prevail.

From the data sheet for the MM506, the average clock pulse load is 80 pF. Therefore the number of devices driven is 1367/80 or 17 registers.

National Semiconductor

DS0026, DS0056 5 MHz Two-Phase MOS Clock Drivers

general description

DS0026/DS0056 are low cost monolithic high speed two phase MOS clock drivers and interface circuits. Unique circuit design provides both very high speed operation and the ability to drive large capacitive loads. The device accepts standard TTL/DTL outputs and converts them to MOS logic levels. They may be driven from standard 54/74 series and 54S/74S series gates and flip-flops or from drivers such as the DS8830 or DM7440. The DS0026 and DS0056 are intended for applications in which the output pulse width is logically controlled; i.e., the output pulse width is equal to the input pulse width.

The DS0026/DS0056 are designed to fulfill a wide variety of MOS interface requirements. As a MOS clock driver for long silicon-gate shift registers, a single device can drive over 10k bits at 5 MHz. Six devices provide input address and precharge drive for a 8k by 16-bit 1103 RAM memory system. Information on the correct usage of the DS0026 in these as well as other systems is included in the application note AN-76A.

The DS0026 and DS0056 are identical except each driver in the DS0056 is provided with a V_{BB} connection to supply a higher voltage to the output stage. This aids in pulling up the output when it is in the high state. An external resistor tied between these extra pins and a supply higher than V^+ will cause the output to pull up to ($V^+ - 0.1V$) in the off state.

For DS0056 applications, it is required that an external resistor be used to prevent damage to the device when the driver switches low. A typical V_{BB} connection is shown on the next page.

These devices are available in 8-lead TO-5, one watt copper lead frame 8-pin mini-DIP, and one and a half watt ceramic DIP, and TO-8 packages.

features

- Fast rise and fall times—20 ns with 1000 pF load
- High output swing—20V
- High output current drive—±1.5 amps
- TTL/DTL compatible inputs
- High rep rate—5 to 10 MHz depending on power dissipation
- Low power consumption in MOS "0" state—2 mW
- Drives to 0.4V of GND for RAM address drive

9

connection diagrams (Top Views)

TO-5 Package

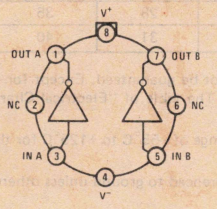

Note: Pin 4 connected to case.

Order Number DS0026H or DS0026CH
See NS Package H08C

Dual-In-Line Package

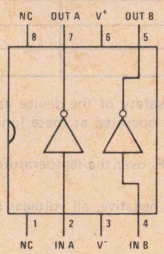

Order Number DS0026CJ-8, DS0026CN-8 or DS0026J-8
See NS Package J08A or N08A

TO-8 Package

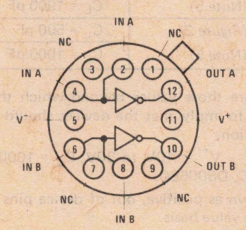

Order Number DS0026H or DS0026CH
See NS Package H12B

Flat Package

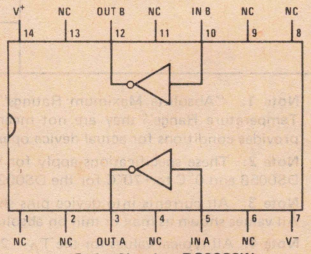

Order Number DS0026W
See NS Package W14A

TO-5 Package

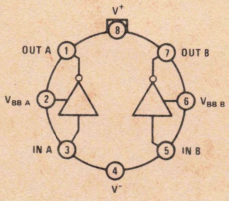

Note: Pin 4 connected to case.

Order Number DS0056H or DS0056CH
See NS Package H08C

Dual-In-Line Package

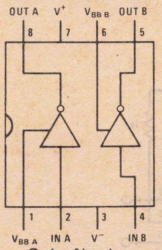

Order Number DS0056J-8, DS0056CJ-8 or DS0056CN-8
See NS Package J08A or N08A

TO-8 Package

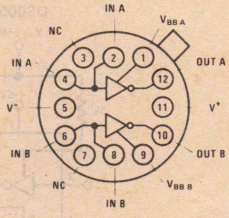

Order Number DS0056H or DS0056CH
See NS Package H12B

absolute maximum ratings (Note 1)

$V^+ - V^-$ Differential Voltage	22V	Operating Temperature Range	
Input Current	100 mA	DS0026, DS0056	−55°C to +125°C
Input Voltage ($V_{IN} - V^-$)	5.5V	DS0026C, DS0056C	0°C to +70°C
Peak Output Current	1.5A	Storage Temperature Range	−65°C to +150°C
		Lead Temperature (Soldering, 10 seconds)	300°C

electrical characteristics (Notes 2 and 3)

PARAMETER		CONDITIONS			MIN	TYP	MAX	UNITS
V_{IH}	Logic "1" Input Voltage	$V^- = 0V$			2	1.5		V
I_{IH}	Logic "1" Input Current	$V_{IN} - V^- = 2.4V$				10	15	mA
V_{IL}	Logic "0" Input Voltage	$V^- = 0V$				0.6	0.4	V
I_{IL}	Logic "0" Input Current	$V_{IN} - V^- = 0V$				−3	−10	μA
V_{OL}	Logic "1" Output Voltage	$V_{IN} - V^- = 2.4V$				V^-+0.7	V^-+1.0	V
V_{OH}	Logic "0" Output Voltage	$V_{IN} - V^- = 0.4V$, $V_{BB} \geq V^+ + 1.0V$		DS0026	V^+−1.0	V^+−0.7		V
				DS0056	V^+−0.3	V^+−0.1		V
$I_{CC(ON)}$	"ON" Supply Current	$V^+ - V^- = 20V$	$V_{IN} - V^- = 2.4V$	DS0026		30	40	mA
		(Note 6)	(one side on)	DS0056		12	30	mA
$I_{CC(OFF)}$	"OFF" Supply Current	$V^+ - V^- = 20V$,		70°C		10	100	μA
		$V_{IN} - V^- = 0V$		125°C		10	500	μA

switching characteristics ($T_A = 25°C$) (Notes 5 and 7)

PARAMETER		CONDITIONS		MIN	TYP	MAX	UNITS
t_{ON}	Turn-on Delay	*(Figure 1)*		5	7.5	12	ns
		(Figure 2)			11		ns
t_{OFF}	Turn-off Delay	*(Figure 1)*			12	15	ns
		(Figure 2)			13		ns
t_r	Rise Time	*(Figure 1)*,	C_L = 500 pF		15	18	ns
		(Note 5)	C_L = 1000 pF		20	35	ns
		(Figure 2),	C_L = 500 pF		30	40	ns
		(Note 5)	C_L = 1000 pF		36	50	ns
t_f	Fall Time	*(Figure 1)*,	C_L = 500 pF		12	16	ns
		(Note 5)	C_L = 1000 pF		17	25	ns
		(Figure 2),	C_L = 500 pF		28	35	ns
		(Note 5)	C_L = 1000 pF		31	40	ns

Note 1: "Absolute Maximum Ratings" are those values beyond which the safety of the device cannot be guaranteed. Except for "Operating Temperature Range" they are not meant to imply that the devices should be operated at these limits. The table of "Electrical Characteristics" provides conditions for actual device operation.

Note 2: These specifications apply for $V^+ - V^- = 10V$ to 20V, C_L = 1000 pF, over the temperature range of −55°C to +125°C for the DS0026, DS0056 and 0°C to +70°C for the DS0026C, DS0056C.

Note 3: All currents into device pins shown as positive, out of device pins as negative, all voltages referenced to ground unless otherwise noted. All values shown as max or min on absolute value basis.

Note 4: All typical values for the $T_A = 25°C$.

Note 5: Rise and fall time are given for MOS logic levels; i.e., rise time is transition from logic "0" to logic "1" which is voltage fall.

Note 6: I_{BB} for DS0056 is approximately $(V_{BB} - V^-)/1\ k\Omega$ (for one side) when output is low.

Note 7: The high current transient (as high as 1.5A) through the resistance of the external interconnecting V^- lead during the output transition from the high state to the low state can appear as negative feedback to the input. If the external interconnecting lead from the driving circuit to V^- is electrically long, or has significant dc resistance, it can subtract from the switching response.

typical V_{BB} connection

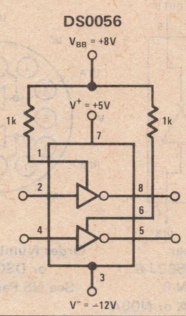

typical performance characteristics

Input Current vs Input Voltage

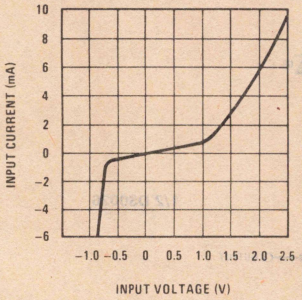

Supply Current vs Temperature

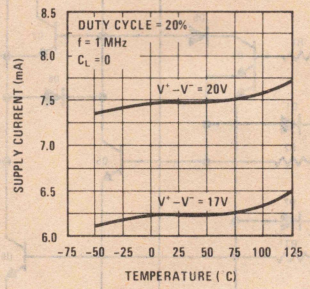

Turn-On and Turn-Off Delay vs Temperature

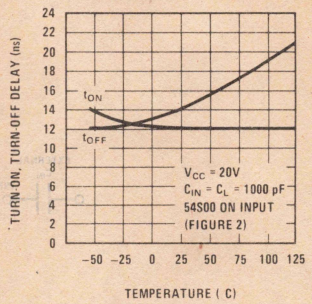

Rise Time vs Load Capacitance

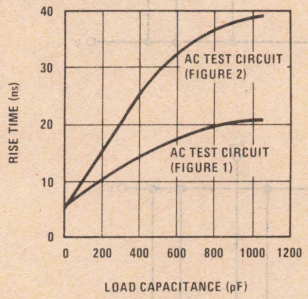

Fall Time vs Load Capacitance

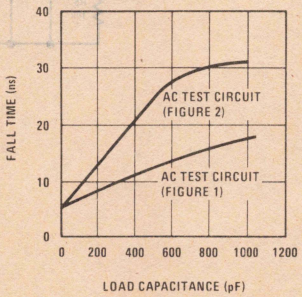

Recommended Input Coupling Capacitance

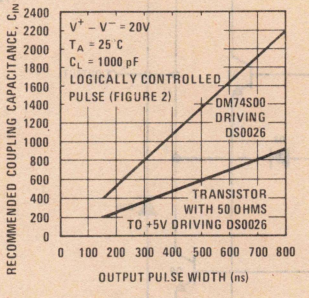

DC Power (P_{DC}) vs Duty Cycle

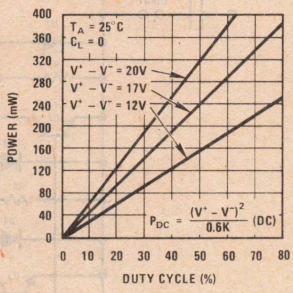

schematic diagrams

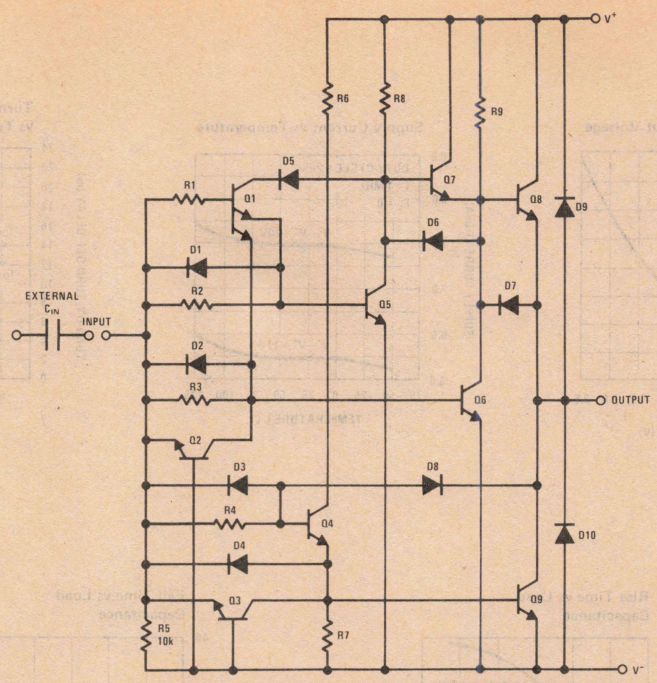

1/2 DS0026

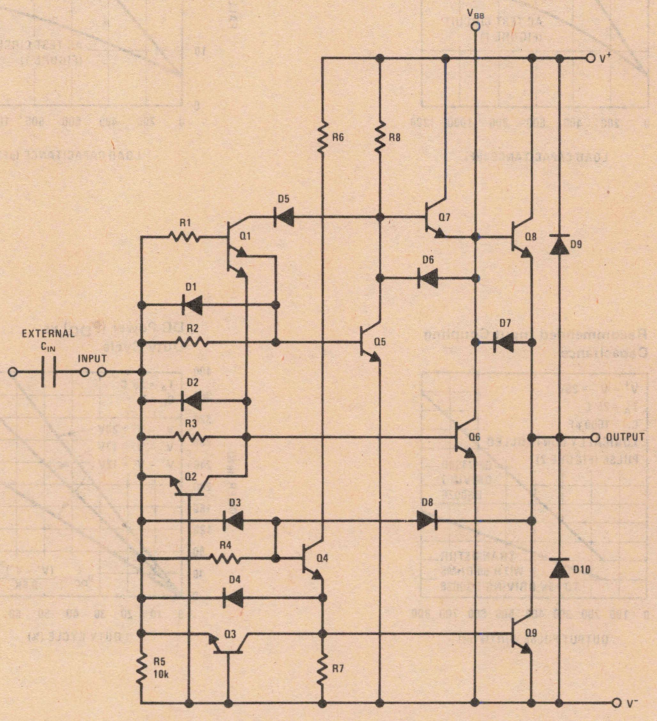

1/2 DS0056

ac test circuits and switching time waveforms

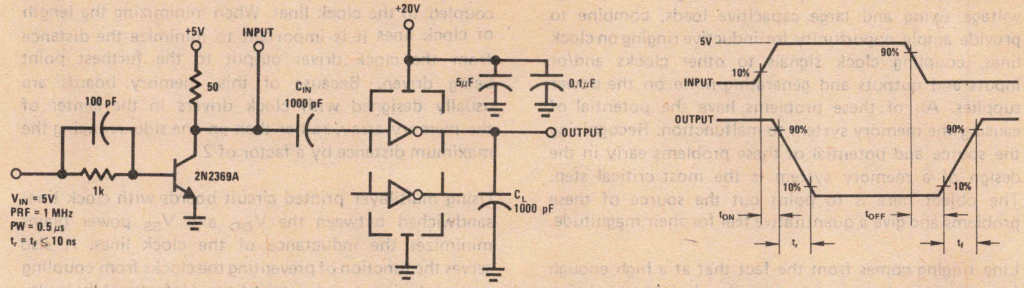

FIGURE 1.

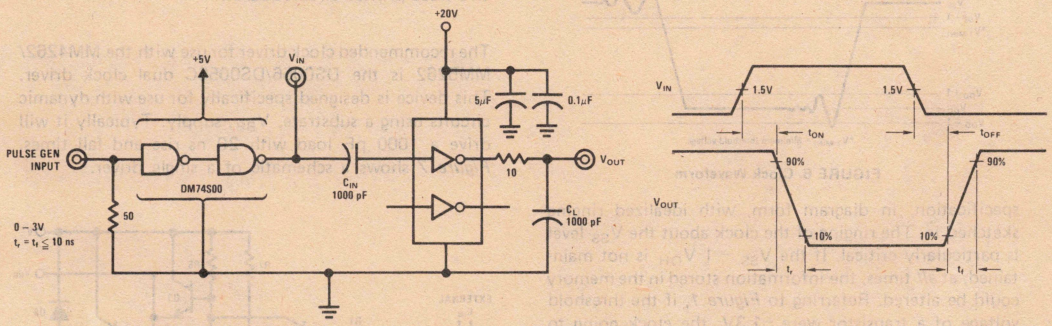

FIGURE 2.

typical applications

AC Coupled MOS Clock Driver

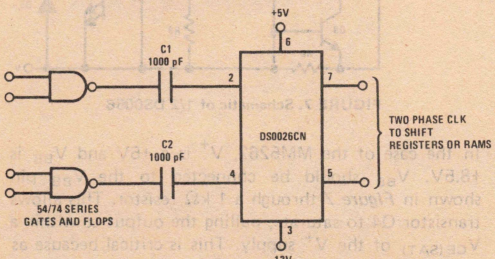

DC Coupled RAM Memory Address or Precharge Driver (Positive Supply Only)

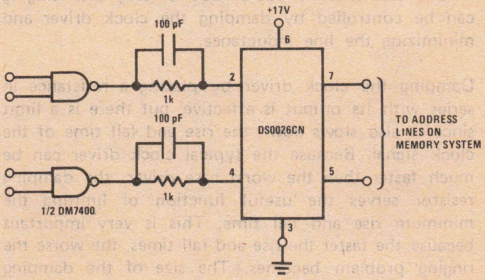

application hints

DRIVING THE MM5262 WITH THE DS0056 CLOCK DRIVER

The clock signals for the MM5262 have three requirements which have the potential of generating problems for the user. These requirements, high speed, large voltage swing and large capacitive loads, combine to provide ample opportunity for inductive ringing on clock lines, coupling clock signals to other clocks and/or inputs and outputs and generating noise on the power supplies. All of these problems have the potential of causing the memory system to malfunction. Recognizing the source and potential of these problems early in the design of a memory system is the most critical step. The object here is to point out the source of these problems and give a quantitative feel for their magnitude.

Line ringing comes from the fact that at a high enough frequency any line must be considered as a transmission line with distributed inductance and capacitance. To see how much ringing can be tolerated we must examine the clock voltage specification. *Figure 6* shows the clock

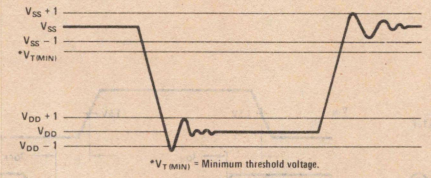

FIGURE 6. Clock Waveform

specification, in diagram form, with idealized ringing sketched in. The ringing of the clock about the V_{SS} level is particularly critical. If the $V_{SS} - 1$ V_{OH} is not maintained, at *all* times, the information stored in the memory could be altered. Referring to *Figure 1*, if the threshold voltage of a transistor were −1.3V, the clock going to $V_{SS} - 1$ would mean that all the devices, whose gates are tied to that clock, would be only 300 mV from turning on. The internal circuitry needs this noise margin and from the functional description of the RAM it is easy to see that turning a clock on at the wrong time can have disastrous results.

Controlling the clock ringing is particulary difficult because of the relative magnitude of the allowable ringing, compared to the magnitude of the transition. In this case it is 1V out of 20V or only 5%. Ringing can be controlled by damping the clock driver and minimizing the line inductance.

Damping the clock driver by placing a resistance in series with its output is effective, but there is a limit since it also slows down the rise and fall time of the clock signal. Because the typical clock driver can be much faster than the worst case driver, the damping resistor serves the useful function of limiting the minimum rise and fall time. This is very important because the faster the rise and fall times, the worse the ringing problem becomes. The size of the damping resistor varies because it is dependent on the details of the actual application. It must be determined empirically. In practice a resistance of 10 ohms to 20 ohms is usually optimum.

Limiting the inductance of the clock lines can be accomplished by minimizing their length and by laying out the lines such that the return current is closely coupled to the clock lines. When minimizing the length of clock lines it is important to minimize the distance from the clock driver output to the furthest point being driven. Because of this, memory boards are usually designed with clock drivers in the center of the memory array, rather than on one side, reducing the maximum distance by a factor of 2.

Using multilayer printed circuit boards with clock lines sandwiched between the V_{DD} and V_{SS} power plains minimizes the inductance of the clock lines. It also serves the function of preventing the clocks from coupling noise into input and output lines. Unfortunately multilayer printed circuit boards are more expensive than two sided boards. The user must make the decision as to the necessity of multilayer boards. Suffice it to say here, that reliable memory boards can be designed using two sided printed circuit boards.

The recommended clock driver for use with the MM4262/MM5262 is the DS0056/DS0056C dual clock driver. This device is designed specifically for use with dynamic circuits using a substrate, V_{BB}, supply. Typically it will drive a 1000 pF load with 20 ns rise and fall times. *Figure 7* shows a schematic of a single driver.

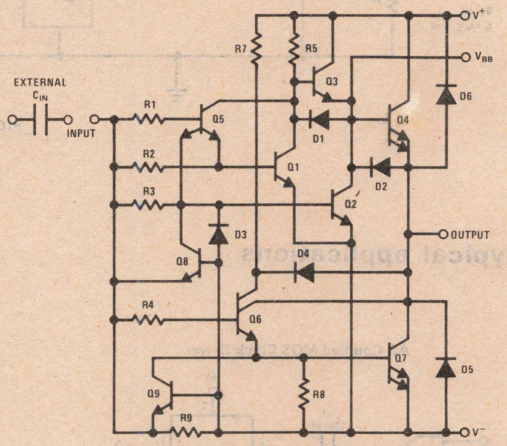

FIGURE 7. Schematic of 1/2 DS0056

In the case of the MM5262, V^+ is a +5V and V_{BB} is +8.5V. V_{BB} should be connected to the V_{BB} pin shown in *Figure 7* through a 1 kΩ resistor. This allows transistor Q4 to saturate, pulling the output to within a $V_{CE(SAT)}$ of the V^+ supply. This is critical because as was shown before, the $V_{SS} - 1.0$V clock level must not be exceeded at any time. Without the V_{BB} pull up on the base of Q4 the output at best will be 0.6V below the V^+ supply and can be 1V below the V^+ supply reducing the noise margin or this line to zero.

Because of the amount of current that the clock driver must supply to its capacitive load, the distribution of power to the clock driver must be considered. *Figure 8* gives the idealized voltage and current waveforms for a clock driver driving a 1000 pF capacitor with 20 ns rise and fall time.

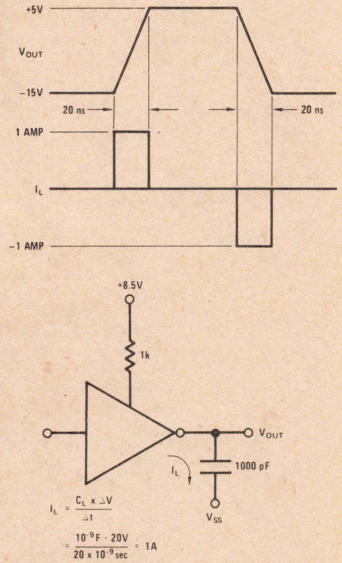

FIGURE 8. Clock Waveforms (Voltage and Current)

As can be seen the current is significant. This current flows in the V_{DD} and V_{SS} power lines. Any significant inductance in the lines will produce large voltage transients on the power supplies, A bypass capacitor, as close as possible to the clock driver, is helpful in minimizing this problem. This bypass is most effective when connected between the V_{SS} and V_{DD} supplies. A bypass capacitor for each DS0056 is recommended. The size of the bypass capacitor depends on the amount of capacitance being driven. Using a low inductance capacitor, such as a ceramic or silver mica, is most effective. Another helpful technique is to run the V_{DD} and V_{SS} lines, to the clock driver, adjacent to each other. This tends to reduce the lines inductance and therefore the magnitude of the voltage transients.

While discussing the clock driver, it should be pointed out that the DS0056 is a relatively low input impedance device. It is possible to couple current noise into the input without seeing a significant voltage. Since this noise is difficult to detect with an oscilloscope it is often overlooked.

Lastly, the clock lines must be considered as noise generators. *Figure 9* shows a clock coupled through a parasitic coupling capacitor, C_C, to eight data input lines being driven by a 7404. A parasitic lumped line inductance, L, is also shown. Let us assume, for the sake of argument, that C_C is 1 pF and that the rise time of the clock is high enough to completely isolate the clock tranisent from the 7404 because of the inductance, L.

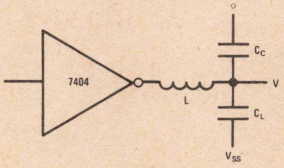

FIGURE 9. Clock Coupling

With a clock transition of 20V the magnitude of the voltage generated across C_L is:

$$V = 20V \times \frac{C_C}{C_L + C_C} = 20V \times \left(\frac{1}{56+1}\right) = 0.35V$$

This has been a hypothetical example to emphasize that with 20V low rise/fall time transitions, parasitic elements can not be neglected. In this example, 1 pF of parasitic capacitance could cause system malfunction, because a 7404 without a pull up resistor has typically only 0.3V of noise margin in the "1" state at 25°C. Of course it is stretching things to assume that the inductance, L, completely isolates the clock transient from the 7404. However, it does point out the need to minimize inductance in input/output as well as clock lines.

The output is current, so it is more meaningful to examine the current that is coupled through a 1 pF parasitic capacitance. The current would be:

$$I = C_C \times \frac{\Delta V}{\Delta t} = \frac{1 \times 10^{-12} \times 20}{20 \times 10^{-9}} = 1\ mA$$

This exceeds the total output current swing so it is obviously significant.

Clock coupling to inputs and outputs can be minimized by using multilayer printed circuit boards, as mentioned previously, physically isolating clock lines and/or running clock lines at right angles to input/output lines. All of these techniques tend to minimize parasitic coupling capacitance from the clocks to the signals in question.

In considering clock coupling it is also important to have a detailed knowledge of the functional characteristics of the device being used. As an example, for the MM5262, coupling noise from the $\phi 2$ clock to the address lines is of no particular consequence. On the other hand the address inputs will be sensitive to noise coupled from $\phi 1$ clock.

Because of the amount of current that the clock driver must supply to its capacitive load, the distribution of power to the clock driver must be considered. Figure 8 gives the idealized voltage and current waveforms for a clock driver driving a 1000 pF capacitor with 20 ns rise and fall times.

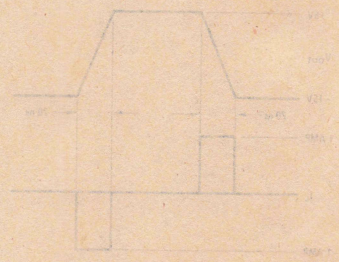

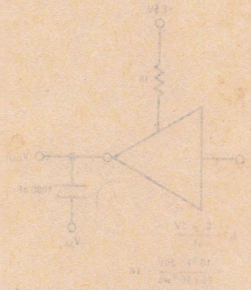

FIGURE 8. Clock Waveforms (Voltage and Current)

As can be seen, the current is significant. This current flows in the V_{DD} and V_{SS} power lines. Any significant inductance in the lines will produce large voltage transients on the power supplies. A bypass capacitor as close as possible to the clock driver is helpful in minimizing this problem. This bypass is most effective when connected between the V_{SS} and V_{DD} supplies. A bypass capacitor for each D3000B is recommended. The size of the bypass capacitor depends on the amount and/or capacitance being driven. Using a low inductance capacitor, such as a ceramic or silver mica, is most effective. Another helpful technique is to run the V_{OUT} and V_{SS} lines to the clock driver, adjacent to each other. This tends to reduce the lines inductance and therefore the magnitude of the voltage transients.

While discussing the clock driver, it should be pointed out that the D3000B is a relatively low input impedance device. It is possible to couple current noise into the input without seeing a significant voltage. Since this noise is difficult to detect with an oscilloscope it is often overlooked.

Lastly, the clock lines must be considered as noise generators. Figure 9 shows a clock coupled through a parasitic coupling capacitor, C_C, to high data input lines being driven by a 74C4. A parasitic inductance, L, is also shown. Let us assume, for the sake of argument, that C_C is 1 pF and that the rise time of the clock is high enough to completely isolate the clock transient from the 74C4 because of the inductance, L.

FIGURE 9. Clock Coupling

With a clock transition of 20V the magnitude of the voltage generated across C_C is:

$$V = 20V \times \frac{C_C}{C_C + C_S} = 20V \times \left(\frac{1}{56+1}\right) = 0.35V$$

This has been a hypothetical example to emphasize that with 20V low rise/fall time transitions, parasitic elements can not be neglected. In this example, 1 pF of parasitic capacitance could cause system malfunction, because a 74C4 without a pull-up resistor has typically only 0.3V of noise margin in the "1" state at 25°C. Of course it is stretching things to assume that the inductance, L, completely isolates the clock transient from the 74C4. However, it does point out the need to minimize inductance in input/output as well as clock lines.

The output is current, so it is more meaningful to examine the current that is coupled through a 1 pF parasitic capacitance. The current would be:

$$I = C_C \times \frac{\Delta V}{\Delta t} = \frac{1 \times 10^{-12} \times 20}{20 \times 10^{-9}} = 1\ mA$$

This exceeds the total output current swing so it is obviously sign clean.

Clock coupling to inputs and outputs can be minimized by using multilayer printed circuit boards, as mentioned previously, physically isolating clock lines and/or running clock lines at right angles to input/output lines. All of these techniques tend to minimize parasitic coupling capacitance from the clocks to the signals in question.

In considering clock coupling it is also important to have a detailed knowledge of the functional characteristics of the device being used. As an example, in the MM74C922 coupling noise from the $\phi 2$ clock to the address lines is of no particular consequence. On the other hand the address inputs will be sensitive to noise coupled from $\phi 1$ clock.

Section 10

Digital Drivers

10

Section 10. Digital Drivers

These devices accept TTL or DTL input and provide extended output capability for actuators and displays.

Typical Application Function	I_{OUT}	V_{SAT}	LV_{CEO}	t_{ON}	t_{OFF}	Part Number −55°C to 125°C	Part Number −25°C to 85°C	Page Number
Lamp Driver, Current Sinking	0.4 A	1.0 V	45 V	0.26 μs	2.2 μs	DH0011H	DH0011CH DH0011CN	10-10
Motor, Relay, Current Sourcing	1.6 A	1.5 V	45 V	0.40 μs	7.0 μs	DH0006H	DH0006CH DH0006CN	10-4
Lamps, Relay, Current Sourcing	0.25 A	0.4 V	40 V	0.16 μs	0.22 μs	DH0008H	DH0008CH DH0008CN	10-7
Relay, Display, Current Sinking	0.25 A	0.6 V	70 V	50 ns	500 ns		DH0016CN	10-13
Display, Current Sinking	0.50 A	0.6 V	50 V	50 ns	1.5 μs		DH0017CN	10-13
Display, Current Sinking	0.05 A	0.6 V	100 V	50 ns	1.5 μs		DH0018CN	10-13
Hammer Driver	5.0 A	2.0 V	45 V	0.4 μs	7.0 μs	DH0028H	DH0028CH DH0028CN	10-16
Level Translator	100 mA	0.5 V	−25 V	25 ns	75 ns	DH0034D DH0034H	DH0034CD DH0034CH	10-18
Pin Diode	±0.5 A	1 V	30 V	10 ns	30 ns	DH0035G	DH0035CG	10-21

Note: Also see the *Interface Databook* for other driver products.

National Semiconductor

DH0006/DH0006C Current Driver

general description

The DH0006/DH0006C is an integrated high voltage, high current driver designed to accept standard DTL or TTL logic levels and drive a load of up to 400 mA at 28 volts. AND inputs are provided along with an Expander connection, should additional gating be required. The addition of an external capacitor provides control of the rise and fall times of the output in order to decrease cold lamp surges or to minimize electromagnetic interference if long lines are driven.

Since one side of the load is normally grounded, there is less likelihood of false turn-on due to an inadvertent short in the drive line.

*Previously called NH0006/NH0006C

features

- Operation from a Single +10V to +45V Power Supply.
- Low Standby Power Dissipation of only 35 mW for 28V Power Supply.
- 1.5A, 50 ms, Pulse Current Capability.

schematic and connection diagrams

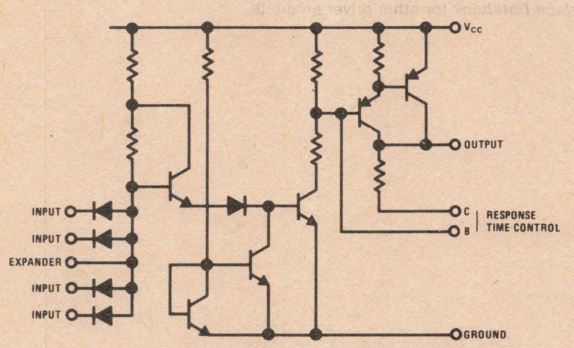

Metal Can Package

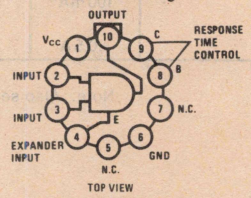

Order Number DH0006H or DH0006CH
See Package H10F

Dual-In-Line Package

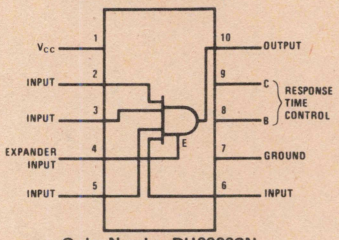

Order Number DH0006CN
See Package N10B

typical applications

Relay Driver

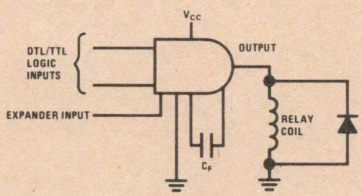

Lamp Driver with Expanded Inputs

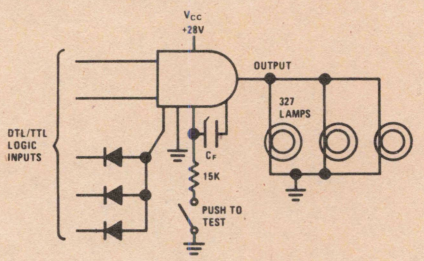

absolute maximum ratings

Peak Power Supply Voltage (for 0.1 sec)	60V
Continuous Supply Voltage	45V
Input Voltage	5.5V
Input Extender Current	5.0 mA
Peak Output Current (50 ms On/1 sec Off)	1.5A
Operating Temperature	
DH0006	−55°C to +125°C
DH0006C, DH0006CN	0°C to +70°C
Storage Temperature	−65°C to +150°C

electrical characteristics (Note 1)

PARAMETER	CONDITIONS	MIN	TYP (Note 2)	MAX	UNITS
Logical "1" Input Voltage	V_{CC} = 45V to 10V	2.0			V
Logical "0" Input Voltage	V_{CC} = 45V to 10V			0.8	V
Logical "1" Output Voltage	V_{CC} = 28V, V_{IN} = 2.0V, I_{OUT} = 400 mA	26.5	27.0		V
Logical "0" Output Voltage	V_{CC} = 45V, V_{IN} = 0.8V, R_L = 1K		.001	.01	V
Logical "1" Output Voltage	V_{CC} = 10V, V_{IN} = 2.0V, I_{OUT} = 150 mA	8.8	9.2		V
Logical "0" Input Current	V_{CC} = 45V, V_{IN} = .4V		−0.8	−1.0	mA
Logical "1" Input Current	V_{CC} = 45V, V_{IN} = 2.4V		0.5	5.0	μA
	V_{CC} = 45V, V_{IN} = 5.5V			100	μA
"Off" Power Supply Current	V_{CC} = 45V, V_{IN} = 0.8V		1.6	2.0	mA
"On" Power Supply Current	V_{CC} = 45V, V_{IN} = 2.0V, I_{OUT} = 0 mA			8	mA
Rise Time	V_{CC} = 28V, R_L = 82Ω		0.10		μs
Fall Time	V_{CC} = 28V, R_L = 82Ω		0.8		μs
T_{on}	V_{CC} = 28V, R_L = 82Ω		0.26		μs
T_{off}	V_{CC} = 28V, R_L = 82Ω		2.2		μs

Note 1: Unless otherwise specified, limits shown apply from −55°C to 125°C for DH0006 and 0°C to 70°C for DH0006C.

Note 2: Typical values are for 25°C ambient.

Note 3: Power ratings for the TO-5 based on a maximum junction temperature of +175°C and a ϕ_{JA} of 210°C/W.

Note 4: Power rating for the DH0006CN Molded DIP based on a maximum junction temperature of +150°C and a thermal resistance of 175°C/W when mounted in a standard DIP socket.

Note 5: Power rating for the DH0006CN Molded DIP based on a maximum junction temperature of +150°C and a thermal resistance of 150°C/W when mounted on a 1/16 inch thick, epoxy-glass board with ten 0.03 inch wide 2 ounce copper conductors.

switching time waveforms

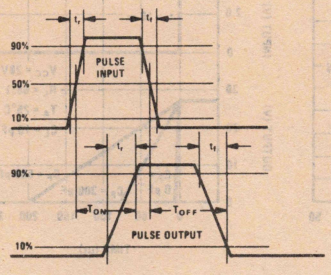

typical performance

Maximum Continuous Output Current For TO-5

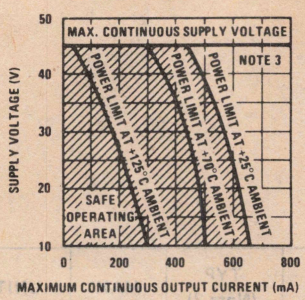

Maximum Continuous Output Current For Molded DIP

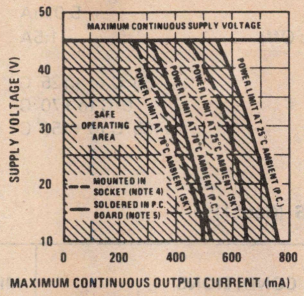

Input Threshold Voltage vs Temperature

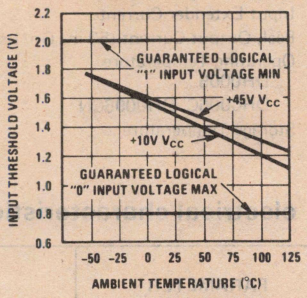

Logical "0" Input Current

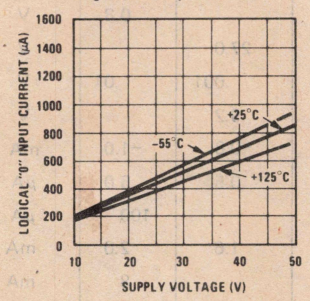

"OFF" Supply Current Drain

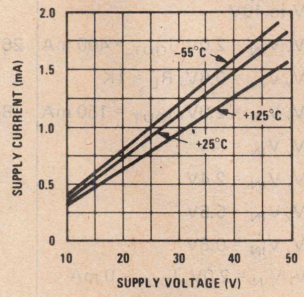

"ON" Supply Current Drain

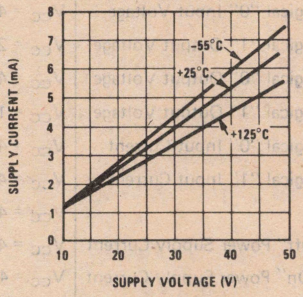

Turn On And Rise Time

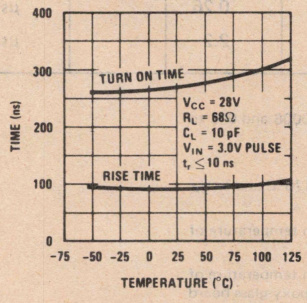

Turn Off and Fall Time

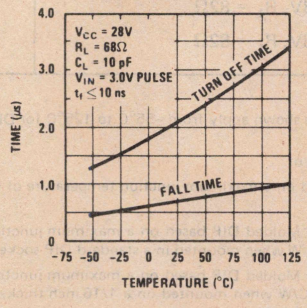

Output Saturation Voltage

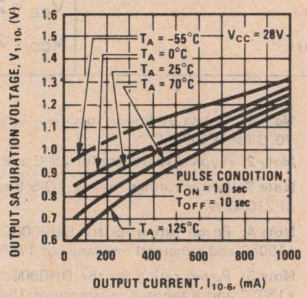

Available Output Current

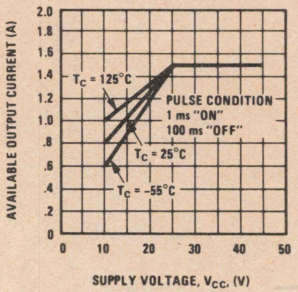

Turn Off Control

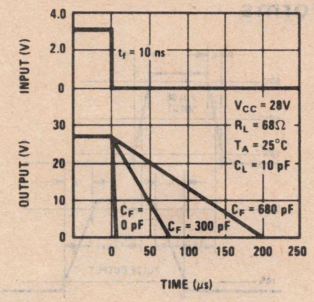

Turn On Control

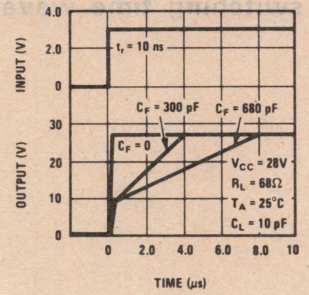

DH0008/DH0008C High Voltage, High Current Driver

general description

The DH0008/DH0008C is an integrated high voltage, high current driver, designed to accept standard DTL or TTL input levels and provide a pulsed load of up to 3A from a continuous supply voltage up to 45V. AND inputs are provided with an EXPANDER connection, should additional gating be required.

Since one side of the load is normally grounded, there is less likelihood of false turn-on due to an inadvertent short in the drive line.

The high pulse current capability makes the DH0008/DH0008C ideal for driving nonlinear resistive loads such as incandescent lamps. The circuit also requires only one power supply for circuit functional operation.

*Previously called NH0008/NH0008C

The DH0008 is available in a 10-pin TO-5 package; the DH0008C is also available in a 10-pin TO-5, in addition to a 10-lead molded dual-in-line package.

features

- Operation from a Single +10V to +45V Power Supply.
- Low Standby Power Dissipation of only 35 mW for 28V Power Supply.
- 3.0A, 50 ms, Pulse Current Capability.

schematic and connection diagrams

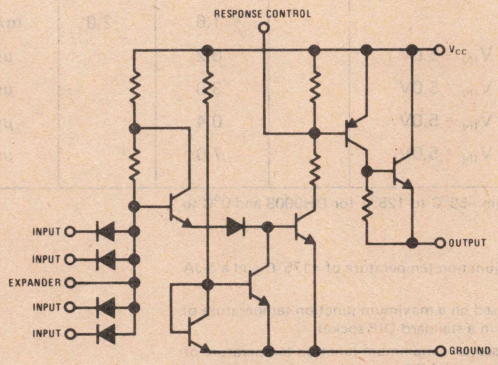

Metal Can Package

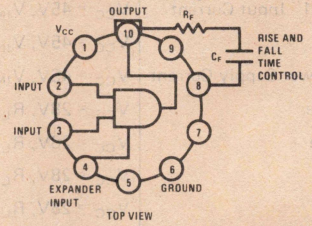

Order Number DH0008H or DH0008CH
See Package H10F

Dual-In-Line Package

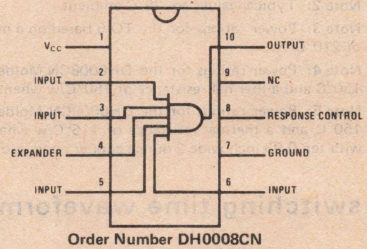

Order Number DH0008CN
See Package N10B

typical application

Controller for Closed Loop Stepper Motor

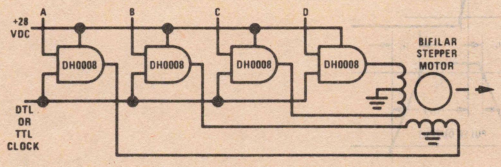

Switching Sequence

Step	A	B	C	D
1	1	0	1	0
2	1	0	0	1
3	0	1	0	1
4	0	1	1	0
1	1	0	1	0

To reverse the direction use a 4, 3, 2, 1 sequence

absolute maximum ratings

Peak Power Supply Voltage (for 0.1 sec)	60V
Continuous Supply Voltage	45V
Input Voltage	5.5V
Input Extender Current	5.0 mA
Peak Output Current (50 msec On/1 sec Off)	3.0 Amp
Continuous Output Current (See continuous operating curves.)	
Operating Temperature	
DH0008	−55°C to +125°C
DH0008C	0°C to +70°C
Storage Temperature	−65°C to +150°C

electrical characteristics (Note 1)

PARAMETER	CONDITIONS	MIN	TYP (Note 2)	MAX	UNITS
Logical "1" Input Voltage	V_{CC} = 45V to 10V	2.0			V
Logical "0" Input Voltage	V_{CC} = 45V to 10V			0.8	V
Logical "1" Output Voltage	V_{CC} = 45V, V_{IN} = 2.0V, I_{OUT} = 1.6A 50 ms On/1 sec Off	43	43.5		V
Logical "0" Output Voltage	V_{CC} = 45V, V_{IN} = 0.8V, R_L = 1K		0.02	0.1	V
Logical "1" Output Voltage	V_{CC} = 28V, V_{IN} = 2.0V, I_{OUT} = 0.8A 50 ms On/1 sec Off	26.5	27.1		V
Logical "0" Input Current	V_{CC} = 45V, V_{IN} = 0.4V		−0.8	−1.0	mA
Logical "1" Input Current	V_{CC} = 45V, V_{IN} = 2.4V		0.5	5.0	μA
	V_{CC} = 45V, V_{IN} = 5.5V			100	μA
"Off" Power Supply Current	V_{CC} = 45V, V_{IN} = 0V		1.6	2.0	mA
Rise Time	V_{CC} = 28V, R_L = 39Ω, V_{IN} = 5.0V		0.2		μs
Fall Time	V_{CC} = 28V, R_L = 39Ω, V_{IN} = 5.0V		3.0		μs
T_{ON}	V_{CC} = 28V, R_L = 39Ω, V_{IN} = 5.0V		0.4		μs
T_{OFF}	V_{CC} = 28V, R_L = 39Ω, V_{IN} = 5.0V		7.0		μs

Note 1: Unless otherwise specified limits shown apply from −55°C to 125°C for DH0008 and 0°C to 70°C for DH0008C.

Note 2: Typical values are 25°C ambient.

Note 3: Power ratings for the TO-5 based on a maximum junction temperature of +175°C and a ϕ JA of 210°C/w.

Note 4: Power ratings for the DH0008CN Molded DIP based on a maximum junction temperature of 150°C and a thermal resistance of 150°C/w when mounted in a standard DIP socket.

Note 5: Power ratings for the DH0008CN Molded DIP based on a maximum junction temperature of 150°C and a thermal resistance of 115°C/w when mounted on a 1/16 inch thick, epoxy-glass board with ten 0.03 inch wide 2 ounce copper conductors.

switching time waveforms

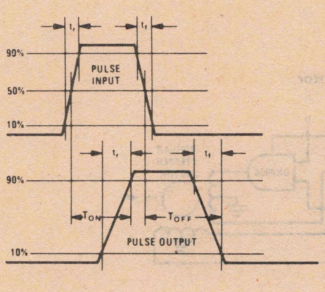

typical performance

Maximum Continuous Output Current for TO-5 Package

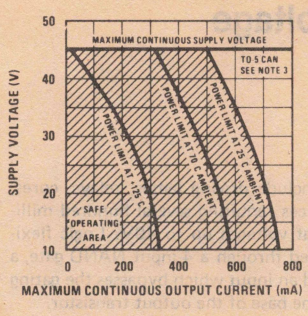

Maximum Continuous Output Current for Molded DIP

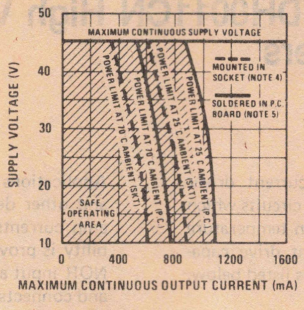

Available Output Current

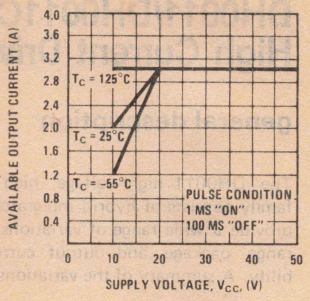

Output Saturation Voltage

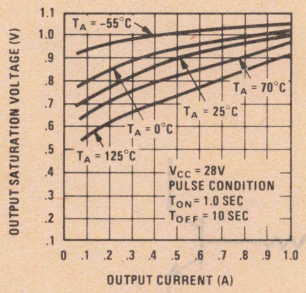

Input Threshold Voltage vs Temperature

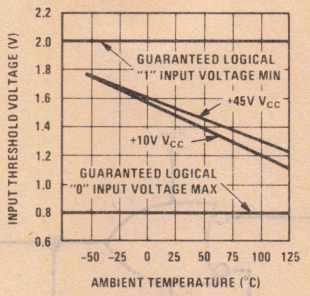

Logical "0" Input Current

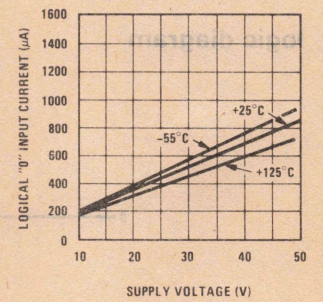

ON Supply Current Drain

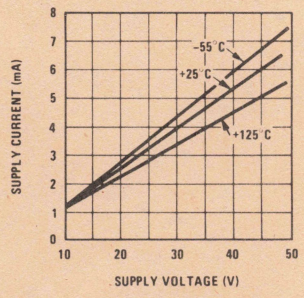

OFF Supply Current Drain

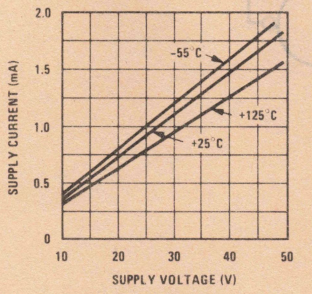

Turn OFF and Fall Times

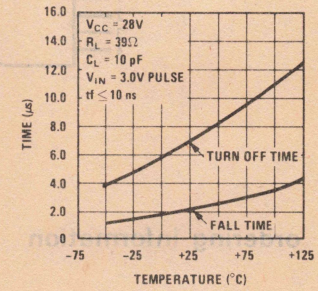

Turn ON Control

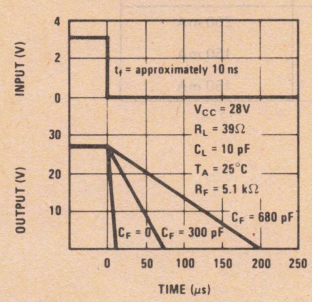

Turn OFF Control

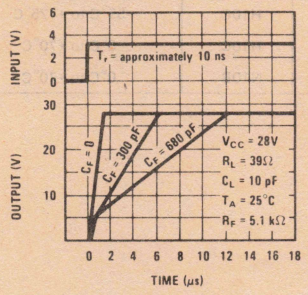

Turn ON and Rise Time

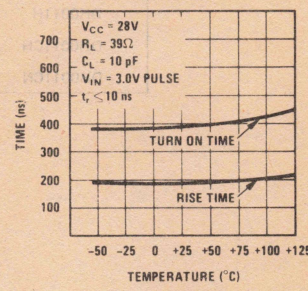

National Semiconductor

DH0011/DH0011C/DH0011CN High Voltage High Current Drivers

general description

The DH0011 high voltage, high current driver family consists of hybrid integrated circuits which provide a wide range of variations in temperature range, package, and output current drive capability. A summary of the variations is listed below.

Applications include driving lamps, relays, cores, and other devices requiring several hundred milliamp currents at voltages up to 40V. Logic flexibility is provided through a 4-input NAND gate, a NOR input and an input which bypasses the gating and connects the base of the output transistor.

logic diagram

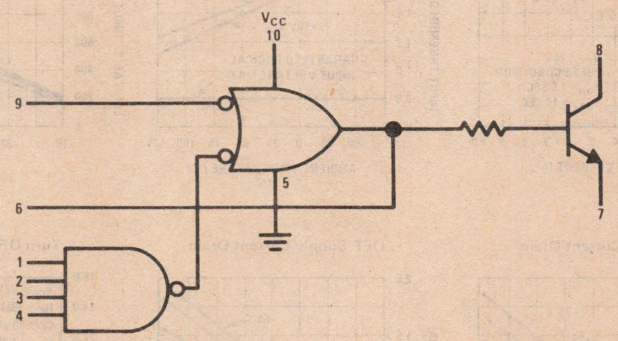

ordering information

NSC DESIGNATION	PACKAGE	TEMPERATURE RANGE	OUTPUT CURRENT CAPABILITY
DH0011H	H10C	-55°C to +125°C	250 mA
DH0011CH	H10C	0°C to +70°C	150 mA
DH0011CN	N10B	0°C to +70°C	150 mA

absolute maximum ratings

V_{CC}		8V
Collector Voltage (Output)		40V
Input Reverse Current		1.0 mA
Power Dissipation		800 mW
Operating Temperature Range	DH0011	−55°C to +125°C
	DH0011C/DH0011CN	0°C to +70°C
Storage Temperature		−65°C to 150°C

electrical characteristics

TEST NO.	PIN 1	PIN 2	PIN 3	PIN 4	PIN 5	PIN 6	PIN 7	PIN 8	PIN 9	PIN 10	SENSE	MIN	MAX
1	V_{IH}	V_{IH}	V_{IH}	V_{IH}	GND		GND	I_{OL1}		V_{CCL}	V_8		V_{OL}
2	V_{IL}				GND		GND	I_{OL1}	V_{IL}	V_{CCL}	V_8		V_{OL}
3	V_{IL}				GND	I_{OL2}				V_{CCL}	V_6		V_{OL2}
4		V_{IL}			GND	I_{OL2}				V_{CCL}	V_6		V_{OL2}
5			V_{IL}		GND	I_{OL2}				V_{CCL}	V_6		V_{OL2}
6				V_{IL}	GND	I_{OL2}				V_{CCL}	V_6		V_{OL2}
7				GND	GND	I_{OL2}			V_{IH}	V_{CCL}	V_6		V_{OL2}
8	V_R	GND	GND	GND	GND					V_{CCH}	I_1		I_R
9	GND	V_R	GND	GND	GND					V_{CCH}	I_2		I_R
10	GND	GND	V_R	GND	GND					V_{CCH}	I_3		I_R
11	GND	GND	GND	V_R	GND					V_{CCH}	I_4		I_R
12					GND				V_R	V_{CCH}	I_9		I_R
13	V_F	V_R	V_R	V_R	GND					V_{CCH}	I_1		$-I_F$
14	V_R	V_F	V_R	V_R	GND					V_{CCH}	I_2		$-I_F$
15	V_R	V_R	V_F	V_R	GND					V_{CCH}	I_3		$-I_F$
16	V_R	V_R	V_R	V_F	GND					V_{CCH}	I_4		$-I_F$
17				GND	GND				V_F	V_{CCH}	I_9		$-I_F$
18					GND		GND			V_{CCL}	V_6	V_{OH}	
19	GND				GND		GND	V_{OX}		V_{CCL}	I_8		I_{OX}
20					GND		GND			V_{PD}	I_{10}		I_{PDH}
21	GND				GND					V_{MAX}	I_{10}		I_{MAX}
22*					GND					V_{PD}			t_{ON}
23*					GND					V_{PD}			t_{OFF}

*See Test Circuits and Waveforms on Page 4.

forcing functions (Note 1) DH0011

PARAMETER	−55°C	+25°C	+125°C	UNITS
V_{CCL}	4.5	4.5	4.5	V
V_{CCH}	5.5	5.5	5.5	V
V_{PD}		5.0		V
V_{MAX}		8.0		V
V_{IL}	1.4	1.1	0.8	V
V_{IH}	2.1	1.9	1.7	V
V_R	4.0	4.0	4.0	V
V_F	0.0	0.0	0.0	V
I_{OL1}	250	250	250	mA
I_{OL2}	8.0	8.0	7.5	mA
V_{OX}	40.0	40.0	40.0	V

Note 1: Temperature Range −55°C to +125°C

forcing functions (Note 2) DH0011C, DH0011CN

PARAMETER	0°C	+25°C	+70°C	UNITS
V_{CCL}	5.00	5.0	5.0	V
V_{CCH}	5.00	5.0	5.0	V
V_{PD}		5.0		V
V_{MAX}		8.0		V
V_{IL}	1.20	1.1	.95	V
V_{IH}	2.00	1.9	1.8	V
V_R	4.00	4.0	4.0	V
V_F	0.45	0.45	0.5	V
I_{OL1}	150	150	150	mA
I_{OL2}	8.0	8.0	7.5	mA
V_{OX}	40.00	40.0	40.0	V

test limits (Note 1) DH0011

PARAMETER	-55°C		+25°C		+125°C		UNITS
	MIN	MAX	MIN	MAX	MIN	MAX	
V_{OL1}		0.45		0.4		0.45	V
V_{OL2}		0.45		0.4		0.45	V
V_{OH}	2.20		2.00		1.80		V
I_R				2.0		5.0	μA
$-I_F$		1.60		1.6		1.5	mA
I_{OX}				5.0		200	μA
I_{PDH}				30.6			mA
I_{MAX}				29.6			mA
t_{ON}				160			ns
t_{OFF}				220			ns

test limits (Note 2) DH0011C, DH0011CN

PARAMETER	0°C		+25°C		+70°C		UNITS
	MIN	MAX	MIN	MAX	MIN	MAX	
V_{OL1}		0.45		0.45		0.5	V
V_{OL2}		0.45		0.45		0.5	V
V_{OH}	2.05		1.95		1.85		V
I_R				5.0		10.0	μA
$-I_F$		1.40		1.4		1.35	mA
I_{OX}				5.0		200	μA
I_{PDH}				30.6			mA
I_{MAX}				34.0			mA

Note 1: Temperature Range -55°C to +125°C
Note 2: Temperature Range 0°C to +70°C

switching time test circuit

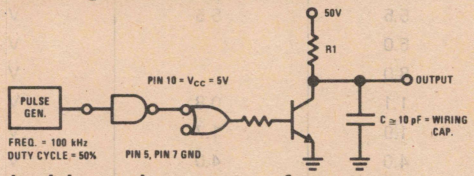

switching time waveforms

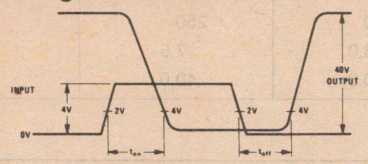

Typical Switching Times

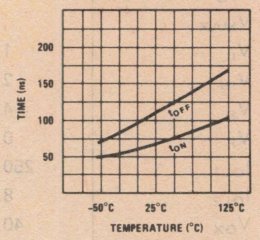

DH0016CN, DH0017CN, DH0018CN High Voltage High Current Drivers

general description

This high-voltage, high-current driver family consists of hybrid integrated circuits which provide a wide range of output currents and output voltages. Applications include driving lamps, relays, cores, and other devices requiring up to 500 mA and withstanding voltages up to 100V. Logic flexibility is provided through a 4-input NAND gate, a NOR input and an input which bypasses the gating and connects to the base of the output transistor.

logic diagram

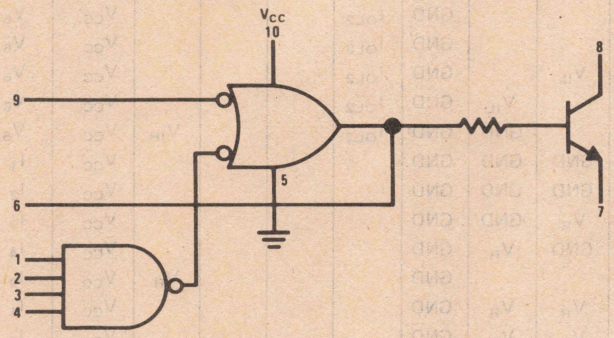

ordering information

NSC DESIGNATION	PACKAGE	OUTPUT CHARACTERISTICS	
		Maximum Standoff Voltage	Current
DH0016CN	N10B	70V	250 mA
DH0017CN	N10B	50V	500 mA
DH0018CN	N10B	100V	500 mA

absolute maximum ratings

V_{CC}		8V
Input Voltage		8V
Collector Voltage	DH0016CN	70V
	DH0017CN	50V
	DH0018CN	100V
Output Surge Current	DH0016CN	1.0A
	DH0017CN & DH0018CN	2.0A
Power Dissipation		455mW
Operating Temperature Range		0°C to +70°C
Storage Temperature		−65°C to +150°C

electrical characteristics

TEST NO.	PIN 1	PIN 2	PIN 3	PIN 4	PIN 5	PIN 6	PIN 7	PIN 8	PIN 9	PIN 10	SENSE	LIMITS	
												MIN	MAX
2	V_{IH}	V_{IH}	V_{IH}	V_{IH}	GND		GND	I_{OL1}		V_{CC}	V_8		V_{OL1}
3	V_{IL}				GND		GND	I_{OL1}	V_{IL}	V_{CC}	V_8		V_{OL1}
4		V_{IL}			GND		GND	I_{OL1}	V_{IL}	V_{CC}	V_8		V_{OL1}
5			V_{IL}		GND		GND	I_{OL1}	V_{IL}	V_{CC}	V_8		V_{OL1}
6				V_{IL}	GND		GND	I_{OL1}	V_{IL}	V_{CC}	V_8		V_{OL1}
7	V_{IL}				GND	I_{OL2}				V_{CC}	V_6		V_{OL2}
8		V_{IL}			GND	I_{OL2}				V_{CC}	V_6		V_{OL2}
9			V_{IL}		GND	I_{OL2}				V_{CC}	V_6		V_{OL2}
10				V_{IL}	GND	I_{OL2}				V_{CC}	V_6		V_{OL2}
11				GND	GND	I_{OL2}			V_{IH}	V_{CC}	V_6		V_{OL2}
12	V_R	GND	GND	GND	GND					V_{CC}	I_1		I_R
13	GND	V_R	GND	GND	GND					V_{CC}	I_2		I_R
14	GND	GND	V_R	GND	GND					V_{CC}	I_3		I_R
15	GND	GND	GND	V_R	GND					V_{CC}	I_4		I_R
16					GND				V_R	V_{CC}	I_9		I_R
17	V_F	V_R	V_R	V_R	GND					V_{CC}	I_1		$-I_F$
18	V_R	V_F	V_R	V_R	GND					V_{CC}	I_2		$-I_F$
19	V_R	V_R	V_F	V_R	GND					V_{CC}	I_3		$-I_F$
20	V_R	V_R	V_R	V_F	GND					V_{CC}	I_4		$-I_F$
21				GND	GND				V_F	V_{CC}	I_9		$-I_F$
22					GND		GND			V_{CC}	V_6	V_{OH1}	
23	GND				GND	I_{OL3}	GND	V_{OX}		V_{CC}	I_8		I_{OX}
24					GND					V_{PD}	I_{10}		I_{PD}
25	GND				GND				GND	V_{MAX}	I_{10}		I_{MAX}

forcing functions

SYMBOL	0°C	+25°C	+70°C	UNITS
V_{CC}	5.0	5.0	5.0	V
V_{PD}		5.0		V
V_{MAX}		8.0		V
V_{IL}	0.85	0.85	0.85	V
V_{IH}	1.9	1.8	1.6	V
V_R	4.5	4.5	4.5	V
V_F	0.45	0.45	0.45	V
V_{OX} (DH0016CN)		70	70	V
V_{OX} (DH0017CN)		50	50	V
V_{OX} (DH0018CN)		100	100	V
I_{OL1} (DH0017CN, DH0018CN)	500	500	500	mA
I_{OL1} (DH0016CN)	250	250	250	mA
I_{OL2}	16	16	16	mA
I_{OL3}		8.0		mA

test limits

SYMBOL	0°C	+25°C	+70°C	UNITS
V_{OL1}	0.6	0.6	0.6	V
V_{OL2}	0.45	0.45	0.45	V
V_{OHI}	1.95	1.85	1.65	V
I_R		60	60	μA
$-I_F$	1.6	1.6	1.6	mA
I_{OX}		5.0	200	μA
I_{PD}		12.2		mA
I_{MAX}		10		mA

Typical Output Voltages vs Temperature

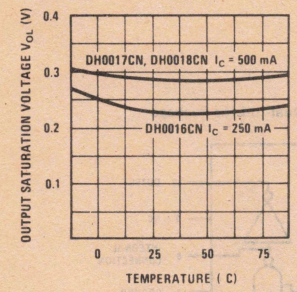

Typical Switching Times I_C = 250 mA DH0016CN

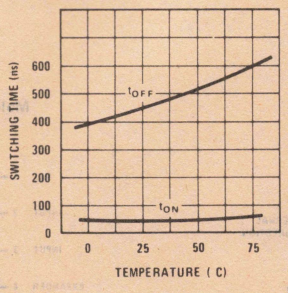

Typical Switching Times I_C = 500 mA DH0017CN, DH0018CN

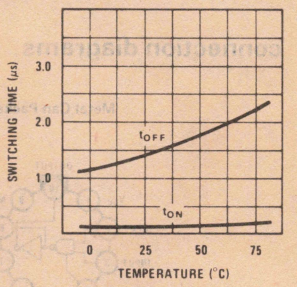

switching time test circuit

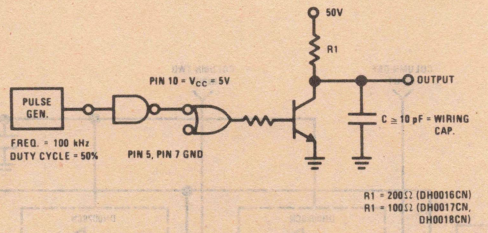

switching time waveform

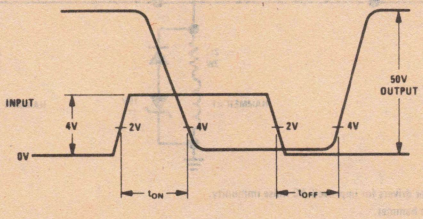

National Semiconductor

DH0028C/DH0028CN Hammer Driver

general description

The DH0028C/DH0028CN is a high current hammer driver designed for utilization in a wide variety of printer applications. The device is capable of driving 6 amp pulsed loads at duty cycles up to 10% (1 ms ON/10 ms OFF). The input is DTL/TTL compatible and requires only a single voltage supply in the range of 10V to 45V.

*Previously called NH0028C/NH0028CN

features

- Low standby power: 45 mW at V_{CC} = 36V, 35 mW at V_{CC} = 28V.
- AND input with expander affords logic flexibility.
- Fast turn-on, typically 200 ns.

connection diagrams

Metal Can Package

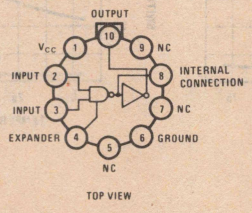

Order Number DH0028CH
See Package H10F

Molded Dual-In-Line Package

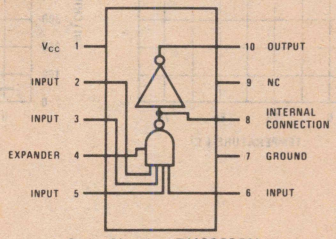

Order Number DH0028CN
See Package N10B

typical application

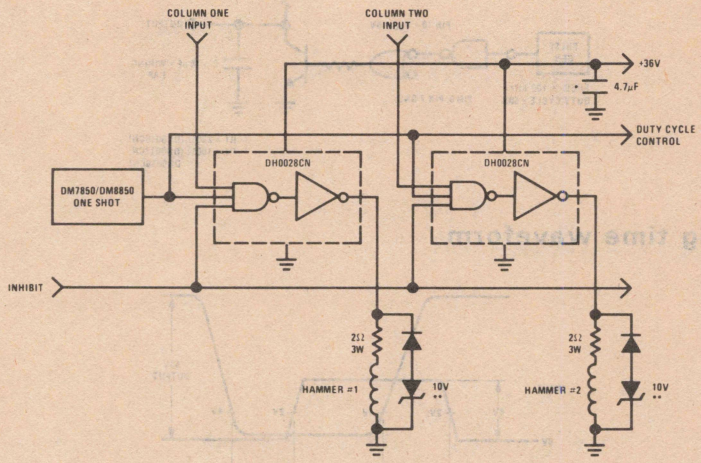

*Use one decoupling capacitor per six hammer drivers for improved AC noise immunity.
**Zener is used to control the dynamics of the hammer.

absolute maximum ratings

Continuous Supply Voltage	45V
Instantaneous Peak Supply Voltage (Pin 1 to Ground for 0.1 sec)	60V
Input Voltage	5.5V
Expander Input Current	5.0 mA
Peak Output Current (1 ms ON/10 ms OFF)	6.5A
Continuous Output Current DH0028C at 25°C	750 mA
DH0028CN at 25°C	1000 mA
Operating Temperature	0°C to 70°C
Storage Temperature	−65°C to +175°C
Lead Soldering Temperature (10 sec)	300°C

electrical characteristics (Note 1)

PARAMETER	CONDITIONS	MIN	TYP (Note 1)	MAX	UNITS
Logical "1" Input Voltage	V_{CC} = 10V to 45V	2.0			V
Logical "0" Input Voltage	V_{CC} = 10V to 45V			0.8	V
Logical "0" Input Current	V_{CC} = 45V, V_{IN} = 0.4V		0.8	1.0	mA
Logical "1" Input Current	V_{CC} = 45V, V_{IN} = 2.4V		0.5	5.0	μA
	V_{CC} = 45V, V_{IN} = 5.5V			100.0	μA
Logical "1" Output Voltage	V_{CC} = 45V, V_{IN} = 2.0V, I_{OUT} = 1.6A	43.0	43.5		V
	V_{CC} = 36V, V_{IN} = 2.0V, I_{OUT} = 5A (Note 2)	33.5	34.0		V
Logical "0" Output Voltage	V_{CC} = 45V, R_L = 1k, V_{IN} = 0.8V		.020	100	V
OFF Power Supply Current	V_{CC} = 45V, V_{IN} = 0.0V		1.6	2.0	mA
Rise Time (10% to 90%)	V_{CC} = 45V, R_L = 39Ω, V_{IN} = 5.0V peak, PRF = 1 kHz		0.2		μs
Fall Time (90% to 10%)	V_{CC} = 45V, R_L = 39Ω, V_{IN} = 5.0V peak, PRF = 1 kHz		3.0		μs
T_{ON}	V_{CC} = 45V, R_L = 39Ω, V_{IN} = 5.0V peak, PRF = 1 kHz		0.4		μs
T_{OFF}	V_{CC} = 45V, R_L = 39Ω, V_{IN} = 5.0V peak, PRF = 1 kHz		7.0		μs

Note 1: These specifications apply for ambient temperatures from 0°C to 70°C unless otherwise specified. All typical values are for 25°C ambient.

Note 2: Measurement made at 1 ms ON and 10 ms OFF.

Note 3: Power ratings for the DH0028C are based on a maximum junction temperature of 175°C and a thermal resistance of 210°C/W.

Note 4: Power ratings for the DH0028CN are based on a maximum junction temperature of 175°C and a thermal resistance of 150°C/W.

typical performance characteristics

Waveforms for Typical Drum Printer Hammer

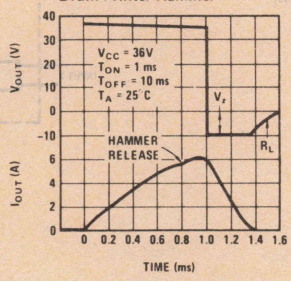

National Semiconductor

DH0034/DH0034C High Speed Dual Level Translator

general description

The DH0034/DH0034C is a high speed level translator suitable for interfacing to MOS or junction FET analog switches. It may also be used as a universal logic level shifter capable of accepting TTL/DTL input levels and shifting to CML, MOS, or SLT levels.

features

- Fast switching, t_{pd0}: typically 15 ns; t_{pd1}: typically 35 ns
- Large output voltage range: 25V
- Input is TTL/DTL compatible
- Low output leakage: typically 0.1 μA

schematic and connection diagrams

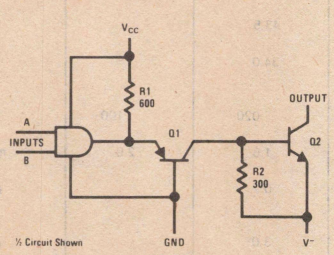

Metal Can Package

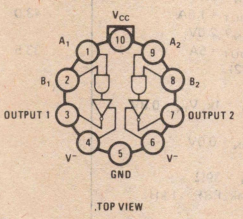

Order Number DH0034H
or DH0034CH
See Package H10F

Dual-in-Line Package

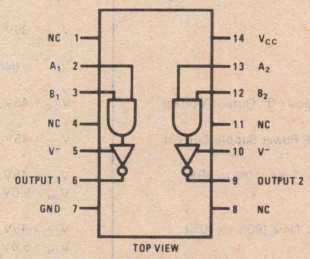

Order Number DH0034D
or DH0034CD
See Package D14D

typical applications

5 MHz Analog Switch

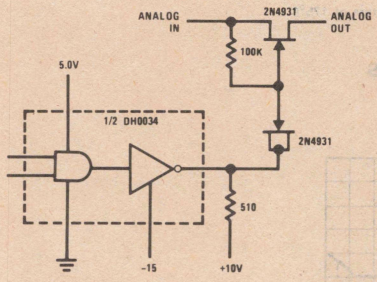

TTL to IBM (SLT) Logic Levels

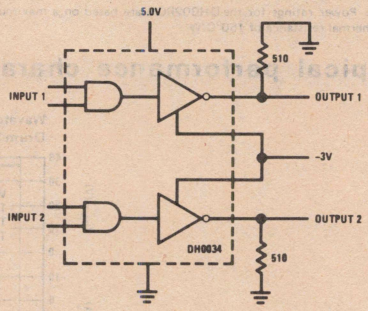

absolute maximum ratings

V_{CC} Supply Voltage	7.0V
Negative Supply Voltage	−30V
Positive Supply Voltage	+25V
Differential Supply Voltage	25V
Maximum Output Current	100 mA
Input Voltage	+5.5V
Operating Temperature Range: DH0034	−55°C to +125°C
DH0034C	0°C to +85°C
Storage Temperature Range	−65°C to +150°C
Lead Temperature (Soldering, 10 sec)	300°C

electrical characteristics (See Notes 1 & 2)

PARAMETER	CONDITIONS	DH0034			DH0034C			UNITS
		MIN	TYP	MAX	MIN	TYP	MAX	
Logical "1" Input Voltage	V_{CC} = 4.5V	2.0						V
	V_{CC} = 4.75V				2.0			
Logical "0" Input Voltage	V_{CC} = 5.5V			0.8				V
	V_{CC} = 4.75V						0.8	
Logical "1" Input Current	V_{CC} = 5.5V, V_{IN} = 2.4V			40				μA
	V_{CC} = 5.25V, V_{IN} = 2.4V						40	
Logical "1" Input Current	V_{CC} = 5.5V, V_{IN} = 5.5V			1.0				mA
	V_{CC} = 5.25V, V_{IN} = 5.5V						1.0	
Logical "0" Input Current	V_{CC} = 5.5V, V_{IN} = 0.4V			1.6				mA
	V_{CC} = 5.25V, V_{IN} = 0.4V						1.6	
Power Supply Current Logic "0"	(Note 3) V_{CC} = 5.5V, V_{IN} = 4.5V		30	38				mA
	V_{CC} = 5.25V, V_{IN} = 4.5V					30	38	
Power Supply Current Logic "1"	(Note 3) V_{CC} = 5.5V, V_{IN} = 0V		37	48				mA
	V_{CC} = 5.25V, V_{IN} = 0V					37	48	
Logical "0" Output Voltage	V_{CC} = 4.5V, I_{OUT} = 100 mA		V^- + .50			V^- + .50		V
	V_{CC} = 4.5V, I_{OUT} = 50 mA		V^- + .3	V^- + .50		V^- + .3	V^- + .65	V
Output Leakage Current	V_{CC} = 5.5V, V_{IN} = 0.8V, $V^+ - V^-$ = 25V		0.1	5		0.1	5	μA
Transition Time to Logical "0"	V_{CC} = 5.0V, V_3 = 0V, T_A = 25°C, V^- = −25V, R_L = 510Ω		15	25		15	35	ns
Transition Time to Logical "1"	V_{CC} = 5.0V, T_A = 25°C, V^- = −25V, R_L = 510Ω		35	75		35	75	ns

Note 1: These specifications apply over the temperature range −55°C to +125°C for the DH0034 and 0°C to +85°C for the DH0034C with a 510 ohm resistor connected between output and ground, and V^- connected to −25V, unless otherwise specified.

Note 2: All typical values are for T_A = 25°C.

Note 3: Current measured is total drawn from V_{CC} supply.

theory of operation

When both inputs of the DH0034 are raised to logic "1", the input AND gate is turned "on" allowing Q1's emitter to become forward biased. Q1 provides a level shift and constant output current. The collector current is essentially the same as the emitter which is given by $\frac{V_{CC} - V_{BE}}{R1}$

Approximately 7.0 mA flows out of Q1's collector.

About 2 mA of Q1's collector current is drawn off by pull down resistor, R2. The balance, 5 mA, is available as base drive to Q2 and to charge its associated Miller capacitance. The output is pulled to within a V_{SAT} of V^-. When either (or both) input to the DH0034 is lowered to logic "0," the AND gate output drops to 0.2V turning Q1 off. Deprived of base drive Q2 rapidly turns off causing the output to rise to the V_3 supply voltage. Since Q2's emitter operates between 0.6V and 0.2V, the speed of the DH0034 is greatly enhanced.

applications information

1. Paralleling the Outputs

The outputs of the DH0034 may be paralleled to increase output drive capability or to accomplish the "wire OR". In order to prevent current hogging by one output transistor or the other, resistors of 2 ohms/100 mA value should be inserted between the emitters of the output transistors and the minus supply.

2. Recommended Output Voltage Swing

The graph shows boundary conditions which govern proper operation of the DH0034. **The range of operation for the negative supply is shown on the X axis and must be between −3V and −25V.** The allowable range for the positive supply is governed by the value chosen for V^-. V^+ may be selected by drawing a vertical line through the selected value for V^- and terminated by the boundaries of the operating region. For example, a value of V^- equal to −6V would dictate values of

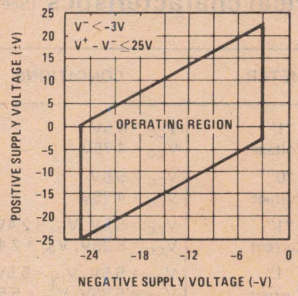

V^+ between −5V and +19V. In general, it is desirable to maintain at least 5V difference between the supplies.

switching time waveforms

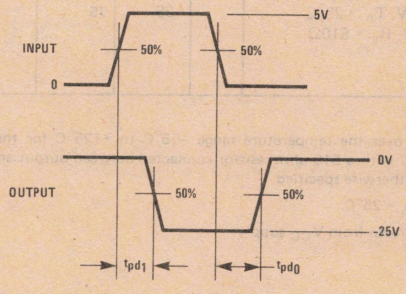

DH0035/DH0035C PIN Diode Driver

general description

The DH0035/DH0035C is a high speed digital driver designed to drive PIN diodes in RF modulators and switches. The device is used in conjunction with an input buffer such as the DM7830/DM8830 or DM5440/DM7440.

features

- Large output voltage swing – 30V
- Peak output current in excess of 1 Amp
- Inputs TTL/DTL compatible
- Short propogation delay – 10 ns
- High repetition rate – 5 MHz

The DH0035/DH0035C is capable of driving a variety of PIN diode types including parallel, serial, anode grounded and cathode grounded. For additional information, see *AN-49 PIN Diode Drivers*.

The DH0035 is guaranteed over the temperature range –55°C to +125°C whereas the DH0035C is guaranteed from 0°C to 85°C.

schematic and connection diagrams

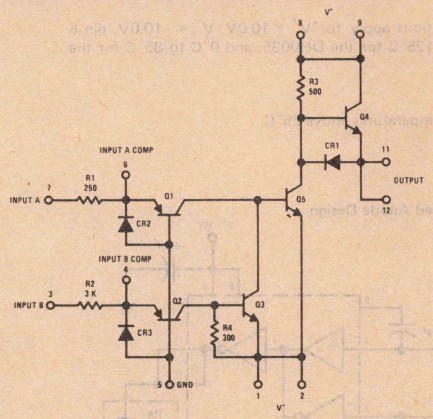

Metal Can Package

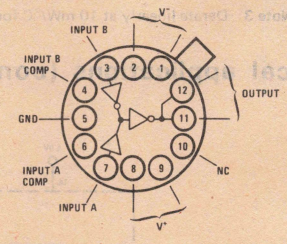

Order Number DH0035G or DH0035CG
See Package H12B

typical applications

Grounded Cathode Design

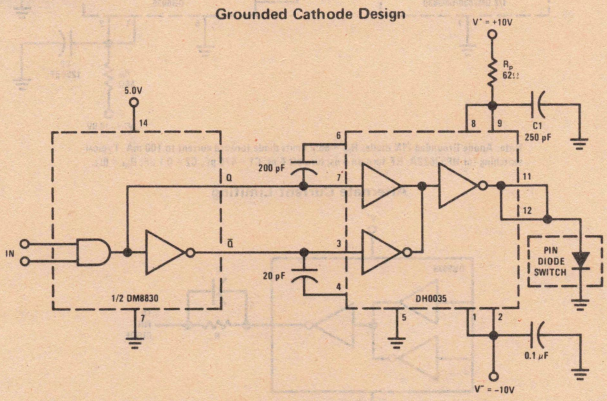

Note: Cathode grounded PIN diode: R_P = 62Ω limits diode forward current to 100 mA. Typical switching for HP33604A, RF turn-on 25 ns, turn-off 5 ns. C2 = 250 pF, R_P = 0Ω, C1 = 0.1F.

absolute maximum ratings

V^- Supply Voltage Differential (Pin 5 to Pin 1 or 2)	40V
V^+ Supply Voltage Differential (Pin 1 or 2 to Pin 8 or 9)	30V
Input Current (Pin 3 or 7)	±75 mA
Peak Output Current	±1.0 Amps
Power Dissipation (Note 3)	1.5W
Storage Temperature Range	−65°C to +150°C
Operating Temperature Range DH0035	−55°C to +125°C
DH0035C	0°C to +85°C
Lead Temperature (Soldering, 10 sec)	300°C

electrical characteristics (Notes 1, 2)

PARAMETER	CONDITIONS	LIMITS MIN	LIMITS TYP	LIMITS MAX	UNITS
Input Logic "1" Threshold	V_{OUT} = −8V, R_L = 100Ω		1.0	2.0	V
Input Logic "0" Threshold	V_{OUT} = +8V, R_L = 100Ω	0.4	0.6		V
Positive Output Swing	I_{OUT} = 100 mA	7.0	+8.0		V
Negative Output Swing	I_{OUT} = 100 mA		−8.0	−7.0	V
Positive Short Circuit Current	V_{IN} = 0V, R_L = 0Ω (Pulse Test; Duty Cycle ≤ 3%)	400	800		mA
Negative Short Circuit Current	V_{IN} = 1.5V, I_{IN} = 50 mA, R_L = 0Ω (Pulse Test, Duty Cycle ≤ 3%)	800	1000		mA
Turn-On Delay	V_{IN} = 1.5V, V_{OUT} = −3V		10	15	ns
Turn-Off Delay	V_{IN} = 1.5V, V_{OUT} = +3V		15	30	ns
On Supply Current	V_{IN} = 1.5V		45	60	mA

Note 1: Unless otherwise specified, these specifications apply for V^+ = 10.0V, V^- = −10.0V, pin 5 grounded, over the temperature range −55°C to +125°C for the DH0035, and 0°C to 85°C for the DH0035C.

Note 2: All typical values are for T_A = 25°C.

Note 3: Derate linearly at 10 mW/°C for ambient temperatures above 25°C.

typical applications (cont.)

Grounded Anode Design

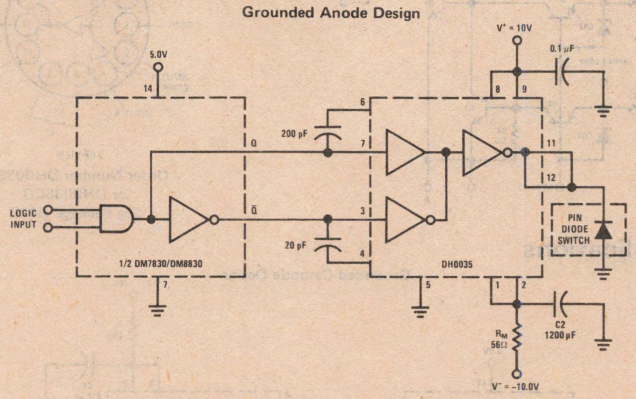

Note: Anode Grounded PIN diode: R_M = 56Ω limits diode forward current to 100 mA. Typical switching for HP33622A, RF turn-on 5 ns; turn-off 4 ns. C1 = 470 pF, C2 = 0.1 μF, R_M = 0Ω.

Alternate Current Limiting

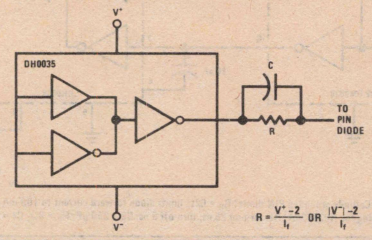

$$R = \frac{V^+ - 2}{I_f} \text{ OR } \frac{|V^-| - 2}{I_f}$$

Section 11

A/D Converters

11

Section 11. Analog-to-Digital Converters

Resolution	Supplies	Linearity	Conversion Time	Part Number −55°C to 125°C	Part Number −25°C to 85°C	Page Number
12	+5V to ±15V	½ LSB	100 μs	ADC1210	ADC1210C	11-5
12	+5V to ±15V	2 LSB	100 μs	ADC1211	ADC1211C	11-5

Note: See the *Data Acquisition Handbook* for National's complete line of converter products.

A/D—D/A Converter/DVM Selection Guide

RESOLUTION (BITS)	NATIONAL PART NUMBER	ALTERNATE SOURCE PART NUMBER	LINEARITY @ 25°C (MAX) (%)	INTERNAL REFERENCE	OUTPUT OP AMP	SUPPLIES (V)	TEMPERATURE RANGES AVAILABLE (°C)	COMMENTS
D/A CONVERTER								
8	DAC0802	DAC-08A, DAC-08H	0.1			±5 to ±15	0 to +70, −55 to +125	High Speed Multiplying
8	DAC0800	DAC-08, DAC-08E	0.19			±5 to ±15	0 to +70, −55 to +125	High Speed Multiplying
8	DAC0801	DAC-08C	0.39			±5 to ±15	0 to +70	High Speed Multiplying
8	DAC0806	MC1408-6	0.78			±5 to ±15	0 to +70	Multiplying
8	DAC0807	MC1408-7	0.39			±5 to ±15	0 to +70	Multiplying
8	DAC0808	MC1508-8/MC1408-8	0.19			±5 to ±15	0 to +70, −55 to +125	Multiplying
10	DAC1020	AD7520L/AD7530L	0.05			5 to 15	0 to +70, −55 to +125	4-Quadrant Multiplying
10	DAC1021	AD7520K/AD7530K	0.1			5 to 15	0 to +70, −55 to +125	4-Quadrant Multiplying
10	DAC1022	AD7520J/AD7530J	0.2			5 to 15	0 to +70, −55 to +125	4-Quadrant Multiplying
12	DAC1220	AD7521L/AD7531L	0.05			5 to 15	0 to +70, −55 to +125	4-Quadrant Multiplying
12	DAC1221	AD7521K/AD7531K	0.1			5 to 15	0 to +70, −55 to +125	4-Quadrant Multiplying
12	DAC1222	AD7521J/AD7531J	0.2			5 to 15	0 to +70, −55 to +125	4-Quadrant Multiplying
12	DAC1200		0.012	•	•	±15, 5	−25 to +85, −55 to +125	Complete DAC
12	DAC1201		0.049	•	•	±15, 5	−25 to +85, −55 to +125	Complete DAC
12	DAC1285	DAC85 (Binary)	0.012	•	•	±15, 5	−25 to +85, −55 to +125	Complete DAC
12	DAC1280	DAC80 (Binary)*	0.024	•	•	±15, 5	−25 to +85	Complete DAC
3-Digits	DAC1202		0.01	•	•	±15, 5	−25 to +85, −55 to +125	Complete BCD DAC
3-Digits	DAC1203		0.05	•	•	±15, 5	−25 to +85, −55 to +125	Complete BCD DAC
3-Digits	DAC1286	DAC85 (BCD)	0.05	•	•	±15, 5	−25 to +85, −55 to +125	Complete BCD DAC
3-Digits	DAC1287	DAC80 (BCD)*	0.1	•	•	±15, 5	−25 to +85	Complete BCD DAC

*Note. Minor specification differences

National Semiconductor

A/D Converter Products

ADC1210, ADC1211 12-Bit CMOS A/D Converters

general description

The ADC1210, ADC1211 are low power, medium speed, 12-bit successive approximation, analog-to-digital converters. The devices are complete converters requiring only the application of a reference voltage and a clock for operation. Included within the device are the successive approximation logic, CMOS analog switches, precision laser trimmed thin film R-2R ladder network and FET input comparator.

The ADC1210 offers 12-bit resolution and 12-bit accuracy, and the ADC1211 offers 12-bit resolution with 10-bit accuracy. The inverted binary outputs are directly compatible with CMOS logic. The ADC1210, ADC1211 will operate over a wide supply range, convert both bipolar and unipolar analog inputs, and operate in either a continuous conversion mode or logic-controlled START-STOP conversion mode. The devices are capable of making a 12-bit conversion in 100 μs typ, and can be connected to convert 10 bits in 30 μs.

Both devices are available in military and industrial temperature ranges.

features

- 12-bit resolution
- ±1/2 LSB linearity
- Single +5V to ±15V supply range
- 100 μs 12-bit, 30 μs 10-bit conversion rate
- CMOS compatible outputs
- Bipolar or unipolar analog inputs
- 200 kΩ analog input impedance
- Low cost

block diagram

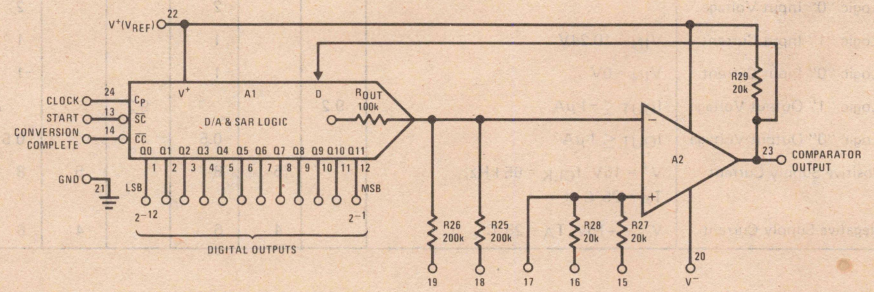

connection diagram

Dual-In-Line Package

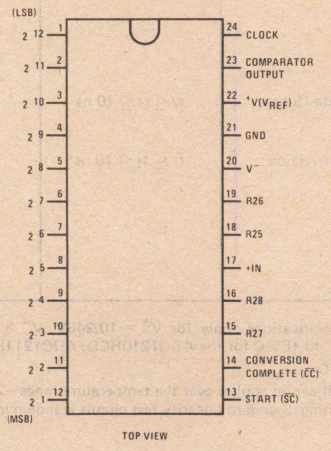

Order Number
ADC1210HD,
ADC1210HCD,
ADC1211HD,
ADC1211HCD
See Package D24D

absolute maximum ratings

Maximum Reference Supply Voltage (V^+)	16V
Maximum Negative Supply Voltage (V^-)	−20V
Voltage At Any Logic Pin	$V^+ + 0.3V$
Analog Input Voltage	±15V
Maximum Digital Output Current	±10 mA
Maximum Comparator Output Current	50 mA
Comparator Output Short-Circuit Duration	5 Seconds
Power Dissipation	See Curves
Operating Temperature Range	
ADC1210HD, ADC1211HD	−55°C to +125°C
ADC1210HCD, ADC1211HCD	−25°C to + 85°C
Storage Temperature Range	−65°C to +150°C
Lead Temperature (Soldering, 10 seconds)	300°C

dc electrical characteristics (Notes 1 and 2)

PARAMETER	CONDITIONS	ADC1210			ADC1211			UNITS
		MIN	TYP	MAX	MIN	TYP	MAX	
Resolution		12			12			Bits
Linearity Error	(Note 3)							
	f_{CLK} = 65 kHz, T_A = 25°C			±0.0122			±0.0488	% FS
	f_{CLK} = 65 kHz			±0.0244				% FS
Full Scale Error	T_A = 25°C, Unadjusted			0.1			0.25	% FS
Zero Scale Error	T_A = 25°C, Unadjusted			0.1			0.25	% FS
Quantization Error				±1/2			±1/2	LSB
Input Resistor Values	R27, R28		20			20		kΩ
Input Resistor Values	R25, R26		200			200		kΩ
Input Resistor Ratios	R25/R26, R27/R28			0.1			0.1	%
Logic "1" Input Voltage		8			8			V
Logic "0" Input Voltage				2			2	V
Logic "1" Input Current	V_{IN} = 10.24V			1			1	μA
Logic "0" Input Current	V_{IN} = 0V			−1			−1	μA
Logic "1" Output Voltage	$I_{OUT} \leq -1\ \mu A$	9.2			9.2			V
Logic "0" Output Voltage	$I_{OUT} \leq 1\ \mu A$			0.5			0.5	V
Positive Supply Current	V^+ = 15V, f_{CLK} = 65 kHz, T_A = 25°C		5	8		5	8	mA
Negative Supply Current	V^- = −15V, T_A = 25°C		4	6		4	6	mA

ac electrical characteristics T_A = 25°C, (Notes 1 and 2)

PARAMETER	CONDITIONS	MIN	TYP	MAX	UNITS
Conversion Time			100	200	μs
Maximum Clock Frequency			130	65	kHz
Maximum Clock Pulse Width		100	50		ns
Propagation Delay From Clock to Data Output (Q0 to Q11)	$t_r \leq t_f \leq 10$ ns		60	150	ns
Propagation Delay From Clock to Conversion Complete	$t_r \leq t_f \leq 10$ ns		60	150	ns
Clock Rise and Fall Time				5	μs
Input Capacitance			10		pF
Start Conversion Set-Up Time		30			ns

Note 1: Unless otherwise noted, these specifications apply for V^+ = 10.240V, V^- = −15V, over the temperature range −55°C to +125°C for the ADC1210HD, ADC1211HD, and −25°C to +85°C for the ADC1210HCD, ADC1211HCD.

Note 2: All typical values are for T_A = 25°C.

Note 3: Unless otherwise noted, this specification applies over the temperature range −25°C to +85°C. Provision is made to adjust zero scale error to 0V and full-scale to 10.2375V during testing. Standard linearity test circuit is shown in *Figure 5a*.

schematic diagram

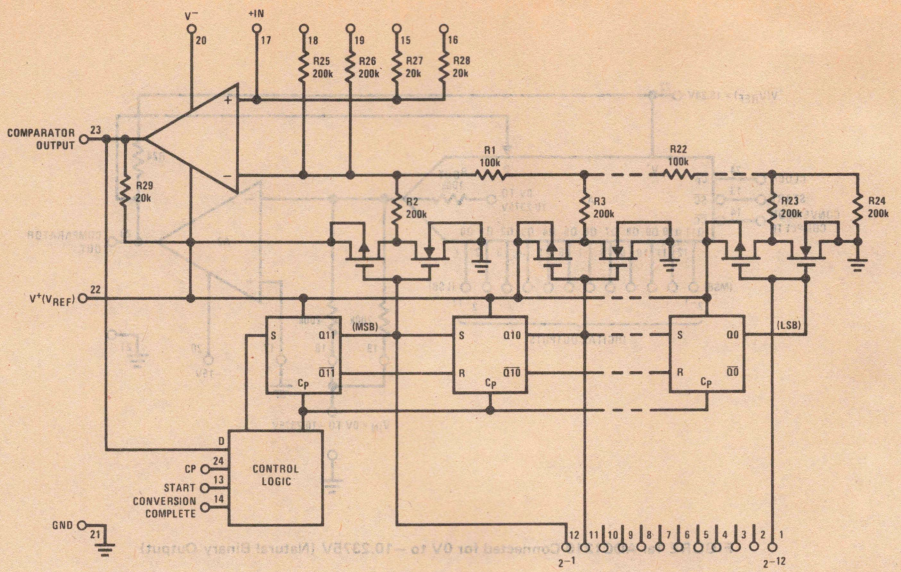

Note: 3 bits shown for clarity

Power Dissipation vs Temperature

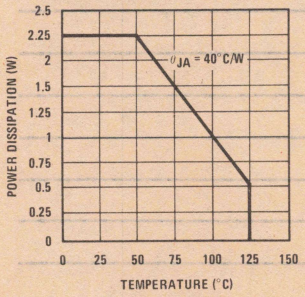

Supply Current vs Supply Voltage

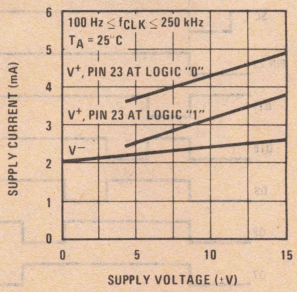

applications information

THEORY OF OPERATION

The ADC1210, ADC1211 are successive approximation analog-to-digital converters, i.e., the conversion takes place 1 bit at a time by comparing the output of the internal D/A to the (unknown) input voltage. The START input (pin 13), when taken low, causes the register to reset synchronously on the next CLOCK low-to-high transition. The MSB, Q11 is set to the low state, and the remaining bits, Q0 through Q10, will be set to the high state. The register will remain in this state until the $\overline{SC}$ input is taken high. When START goes high, the conversion will begin on the low-to-high transition of the CLOCK pulse. Q11 will then assume the state of pin 23. If pin 23 is high, Q11 will be high; if pin 23 is low, Q11 will remain low. At the same time, the next bit, Q10 is set low. All remaining bits, Q0–Q9 will remain unchanged (high). This process will continue until the LSB (Q0) is found. When the conversion process is completed, it is indicated by CONVERSION COMPLETE ($\overline{CC}$) (pin 14) going low. The logic levels at the data output pins (pins 1–12) are the complemented-binary representation of the converted analog signal with Q11 being the MSB and Q0 being the LSB. The register will remain in the above state until the $\overline{SC}$ is again taken low.

An application example is shown in *Figure 1*. In this case, a 0 to −10.2375V input is being converted using the ADC1210 with V^+ = 10.240V, V^- = −15V. *Figure 1b* is the timing diagram for full scale input. *Figure 1c* is the timing diagram for zero scale input, *Figure 1d* is the timing diagram for −3.4125V input (010101010101 = output).

applications information (Continued)

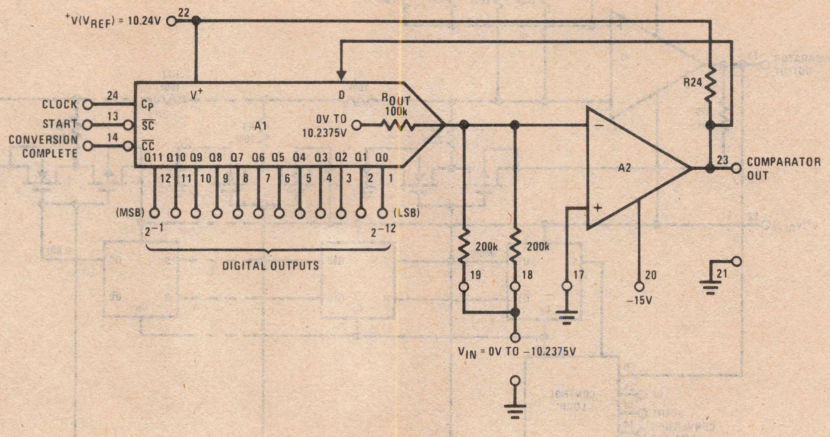

FIGURE 1a. ADC1210 Connected for 0V to −10.2375V (Natural Binary Output)

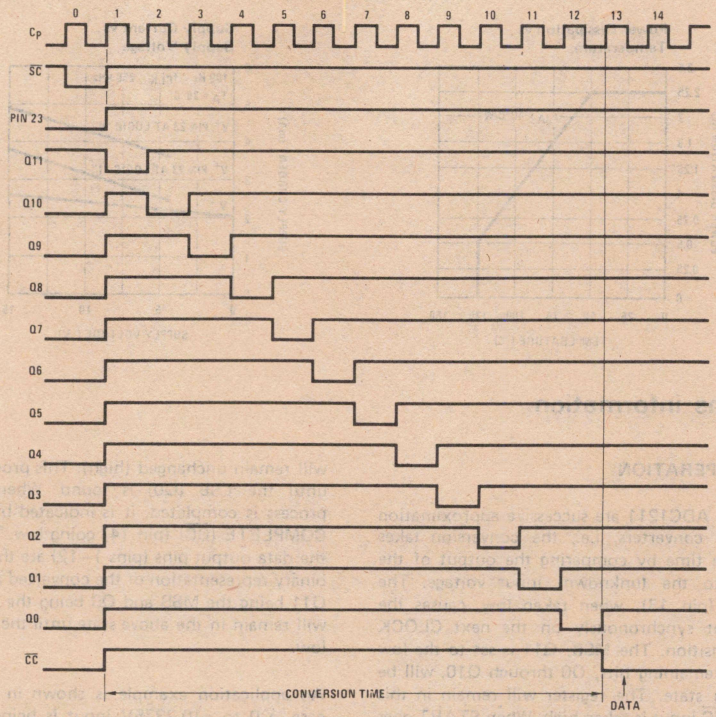

FIGURE 1b. Timing Diagram for V_{IN} = Full Scale Input

applications information (Continued)

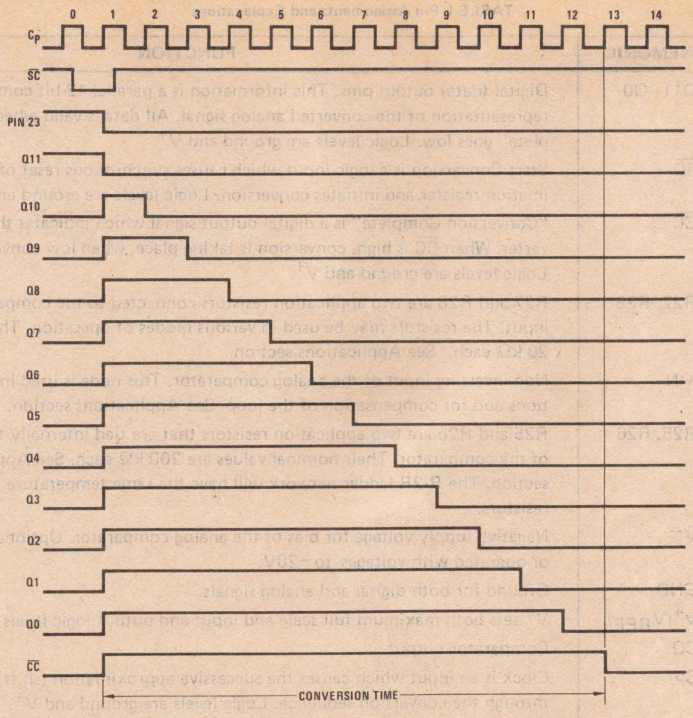

FIGURE 1c. Timing Diagram for V_{IN} = Zero Scale

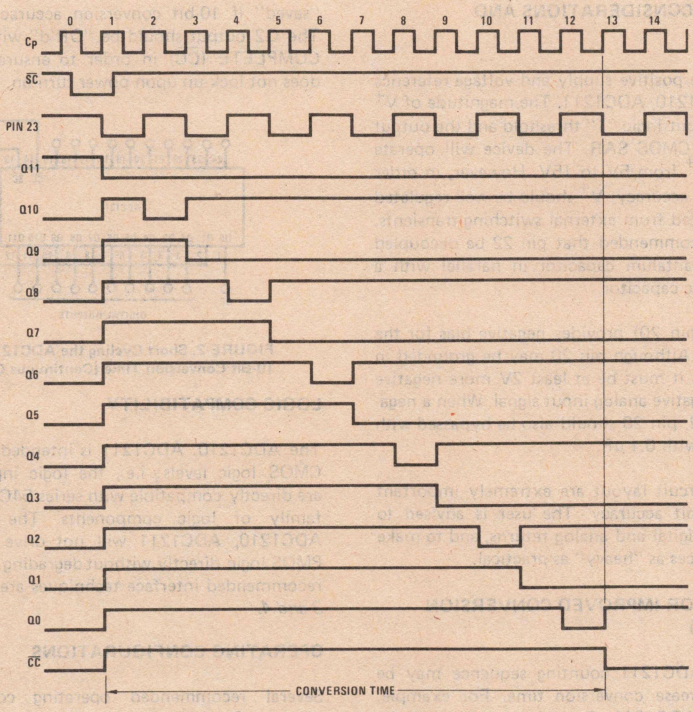

FIGURE 1d. Timing Diagram for V_{IN} = −3.4125V (010101010101)

applications information (Continued)

TABLE I. Pin Assignments and Explanations

PIN NUMBER	MNEMONIC	FUNCTION
1–12	Q11–Q0	Digital (data) output pins. This information is a parallel 12-bit complemented binary representation of the converted analog signal. All data is valid when "Conversion Complete" goes low. Logic levels are ground and V^+.
13	$\overline{SC}$	Start Conversion is a logic input which causes synchronous reset of the successive approximation register and initiates conversion. Logic levels are ground and V^+.
14	$\overline{CC}$	"Conversion Complete" is a digital output signal which indicates the status of the converter. When $\overline{CC}$ is high, conversion is taking place, when low conversion is completed. Logic levels are ground and V^+.
15, 16	R27, R28	R27 and R28 are two application resistors connected to the comparator non-inverting input. The resistors may be used in various modes of operation. Their nominal values are 20 kΩ each. See Applications section.
17	+IN	Non-inverting input of the analog comparator. This node is used in various configurations and for compensation of the loop. See Applications section.
18, 19	R25, R26	R25 and R26 are two application resistors that are tied internally to the inverting input of the comparator. Their nominal values are 200 kΩ each. See Applications section. The R-2R ladder network will have the same temperature coefficient as these resistors.
20	V^-	Negative supply voltage for bias of the analog comparator. Optionally may be grounded or operated with voltages to −20V.
21	GND	Ground for both digital and analog signals.
22	$V^+(V_{REF})$	V^+ sets both maximum full scale and input and output logic levels.
23	CO	Comparator output.
24	Cp	Clock is an input which causes the successive approximation (shift) register to advance through the conversion sequence. Logic levels are ground and V^+.

POWER SUPPLY CONSIDERATIONS AND DECOUPLING

Pin 22 is both the positive supply and voltage reference input to the ADC1210, ADC1211. The magnitude of V^+ determines the input logic "1" threshold and the output voltage from the CMOS SAR. The device will operate over a range of V^+ from 5V to 15V. However, in order to preserve 12-bit accuracy, V^+ should be well regulated (0.01%) and isolated from external switching transients. It is therefore recommended that pin 22 be decoupled with a 4.7 μF tantalum capacitor in parallel with a 0.1 μF ceramic disc capacitor.

The V^- supply (pin 20) provides negative bias for the FET comparator. Although pin 20 may be grounded in some applications, it must be at least 2V more negative than the most negative analog input signal. When a negative supply is used, pin 20 should also be bypassed with 4.7 μF in parallel with 0.1 μF.

Grounding and circuit layout are extremely important in preserving 12-bit accuracy. The user is advised to employ separate digital and analog returns, and to make these PC board traces as "heavy" as practical.

SHORT CYCLE FOR IMPROVED CONVERSION TIME (FIGURE 2)

The ADC1210, ADC1211 counting sequence may be truncated to decrease conversion time. For example, when using the ADC1211, 2 clock intervals may be "saved" if 10-bit conversion accuracy is taking place. The Q2 output should be "OR'd" with CONVERSION COMPLETE ($\overline{CC}$) in order to ensure that the register does not lock-up upon power turn-on.

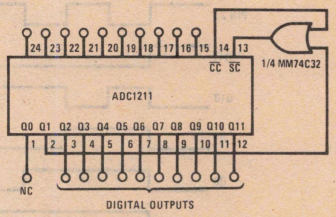

FIGURE 2. Short Cycling the ADC1211 to Improve 10-Bit Conversion Time (Continuous Conversion)

LOGIC COMPATIBILITY

The ADC1210, ADC1211 is intended to interface with CMOS logic levels: i.e., the logic inputs and outputs are directly compatible with series 54C/74C and CD4000 family of logic components. The outputs of the ADC1210, ADC1211 will not drive LPTTL, TTL or PMOS logic directly without degrading accuracy. Various recommended interface techniques are shown in *Figures 3 and 4*.

OPERATING CONFIGURATIONS

Several recommended operating configurations are shown in *Figure 5*.

applications information (Continued)

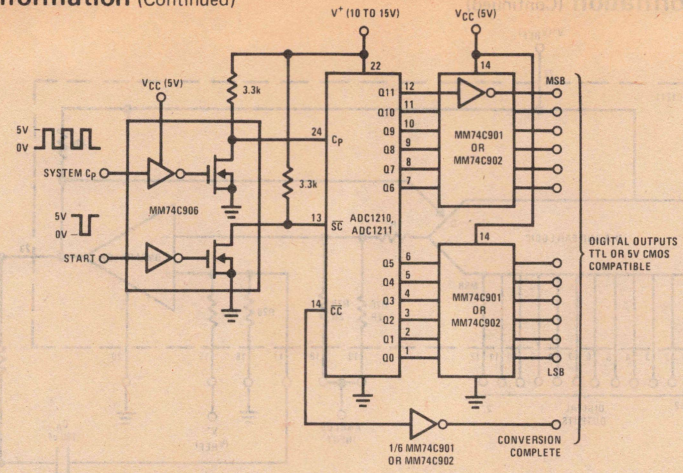

FIGURE 3. Interfacing an ADC1210, ADC1211 Running on $V^+ > V_{CC}$. Example: $V^+ = 10.24V$, System $V_{CC} = 5V$

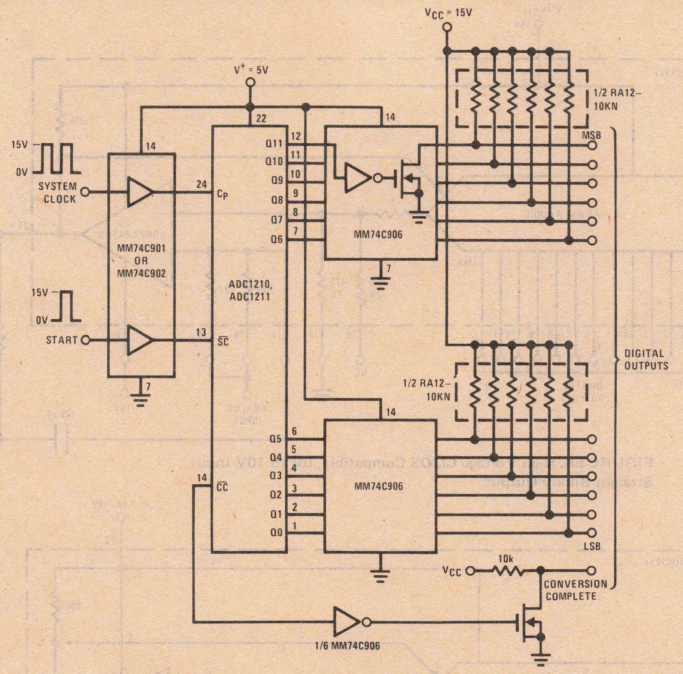

FIGURE 4. Interfacing an ADC1210, ADC1211 Running on $V^+ < V_{CC}$. Example: $V^+ = 5V$, $V_{CC} = 15V$

OFFSET AND FULL SCALE ADJUST

A variety of techniques may be employed to adjust Offset and Full Scale on the ADC1210, ADC1211. A straight-forward Full Scale Adjust is to incrementally vary V^+ (V_{REF}) to match the analog input voltage. A recommended technique is shown in *Figure 6*. An LM199 and low drift op amp (e.g., the LH0044) are used to provide the precision reference. The ADC1210, ADC1211 is put in the continuous convert mode by shorting pins 13 and 14. An analog voltage equal to V_{REF} minus 1 1/2 LSB (10.23625V) is applied to pins 18 and 19, and R1 is adjusted until the LSB flickers equally between logic "1" and logic "0" (all other outputs must be stable logic "0"). Offset Null is accomplished by then applying an analog input voltage equal to 1/2 LSB at pins 18 and 19. R2 is adjusted until the LSB output flickers equally between logic "1" and logic "0" (all other bits are stable). In the circuit of *Figure 6*, the ADC1210, ADC1211 is configured for Complementary Binary logic and the values shown are for $V^+ = 10.240V$, $V_{FS} = 10.2375V$, LSB = 2.5 mV.

An alternate technique is shown in *Figure 7*. In this instance, an LH0071 is used to provide the reference voltage. An analog input voltage equal to V_{REF} minus 1 1/2 LSB (10.23625V) is applied to pins 18 and 19.

applications information (Continued)

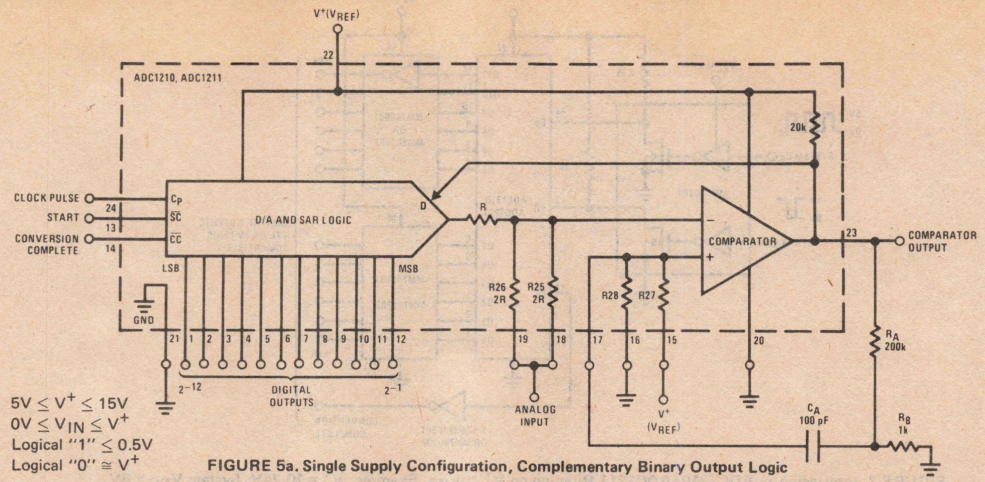

$5V \leq V^+ \leq 15V$
$0V \leq V_{IN} \leq V^+$
Logical "1" $\leq 0.5V$
Logical "0" $\cong V^+$

FIGURE 5a. Single Supply Configuration, Complementary Binary Output Logic

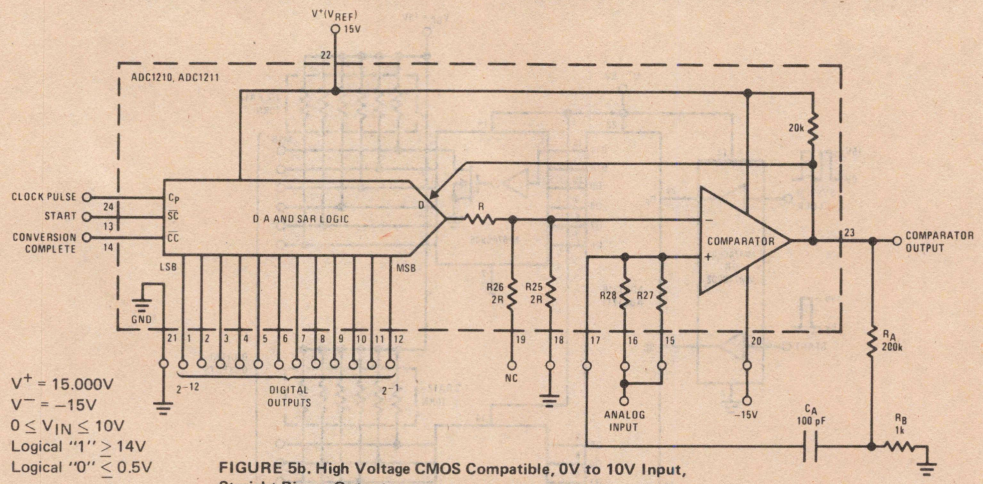

$V^+ = 15.000V$
$V^- = -15V$
$0 \leq V_{IN} \leq 10V$
Logical "1" $\geq 14V$
Logical "0" $\leq 0.5V$

FIGURE 5b. High Voltage CMOS Compatible, 0V to 10V Input, Straight Binary Output

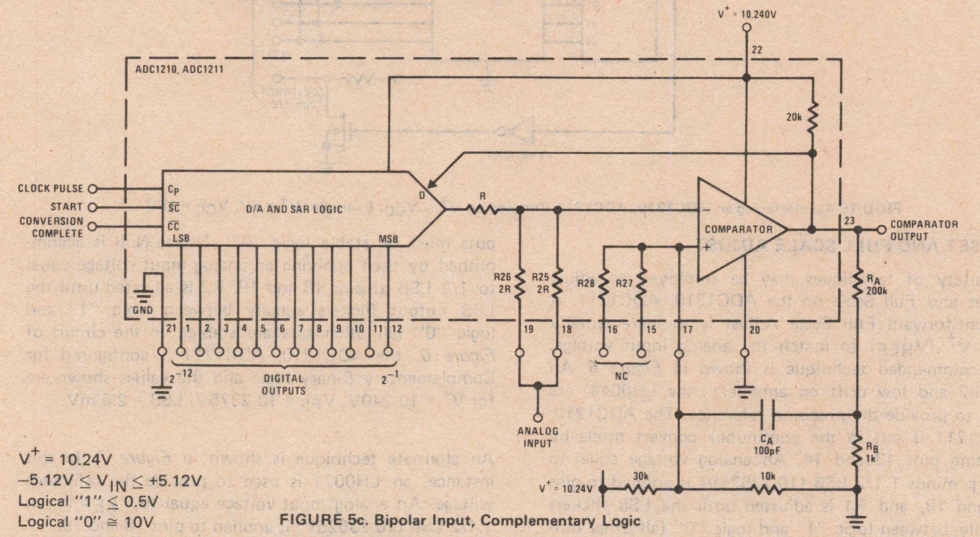

$V^+ = 10.24V$
$-5.12V \leq V_{IN} \leq +5.12V$
Logical "1" $\leq 0.5V$
Logical "0" $\cong 10V$

FIGURE 5c. Bipolar Input, Complementary Logic

applications information (Continued)

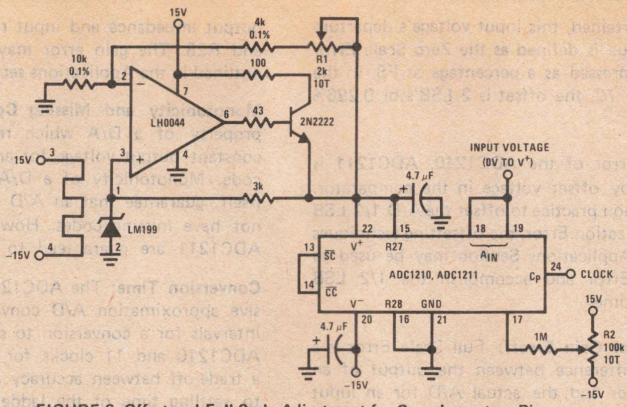

FIGURE 6. Offset and Full Scale Adjustment for Complementary Binary

R1 is adjusted until the LSB output flickers equally between logic "1" and logic "0" (all other outputs must be a stable logic "0"). For Offset Null, an analog voltage equal to 1/2 LSB (1.25 mV) is then applied to pins 18 and 19, and R2, is adjusted until the LSB output flickers equally between logic "1" and "0".

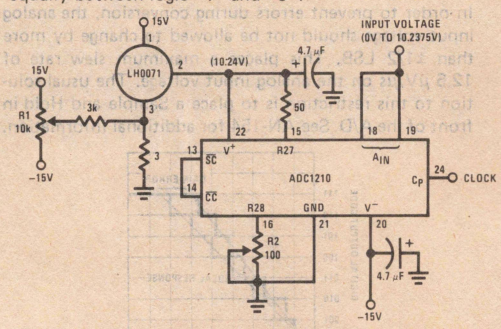

FIGURE 7. Offset and Full-Scale Adjustment Technique Using LH0071

In both techniques shown, adjusting the Full-Scale first and then Offset minimizes adjustment interaction. At least one iteration is recommended as a self-check.

DEFINITION OF TERMS

Resolution: The Resolution of an A/D is an expression of the smallest change in input which will increment (or decrement) the output from one code to the next adjacent code. It is defined in number of bits, or 1 part in 2^n. The ADC1210 and ADC1211 have a resolution of 12 bits or 1 part in 4,096 (0.0244%).

Quantization Uncertainty: Quantization Uncertainty is a direct consequence of the resolution of the converter. All analog voltages within a given range are represented by a single digital output code. There is, therefore, an inherent conversion error even for a perfect A/D. As an example, the transfer characteristic of a perfect 3-bit A/D is shown in *Figure 8*.

As can be seen, all input voltages between 0V and 1V are represented by an output code of 000. All input voltages between 1V and 2V are represented by an output code of 001, etc. If the midpoint of the range is assumed to be the nominal value (e.g., 0.5V), there is an Uncertainty of ±1/2 LSB. It is common practice to

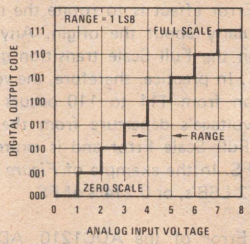

FIGURE 8. Quantization Uncertainty of a Perfect 3-Bit A/D

offset the converter 1/2 LSB in order to reduce the Uncertainty to ±1/2 LSB as shown in *Figure 9*. Rather than +1, −0 bit shown in *Figure 8*. Quantization Uncertainty can only be reduced by increasing Resolution. It is expressed as ±1/2 LSB or as an error percentage of full scale (±0.0122% FS for the ADC1210).

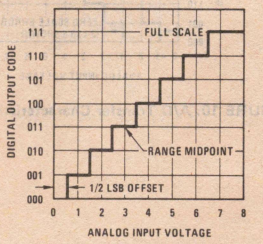

FIGURE 9. Transfer Characteristic Offset 1/2 LSB to Minimize Quantizing Uncertainty

Linearity Error: Linearity Error is the maximum deviation from a straight line passing through the end points of the A/D transfer characteristic. It is measured after calibrating Zero and Full Scale Error. The Linearity Error of the ADC1210 is guaranteed to be less than ±1/2 LSB or ±0.0122% of FS and ±0.0488% of FS for the AD1211. Linearity is a performance characteristic intrinsic to the device and cannot be externally adjusted.

Zero Scale Error (or Offset): Zero Scale Error is a measure of the difference between the output of an ideal and the actual A/D for zero input voltage. As shown in *Figure 10*, the effect of Zero Scale Error is to shift the transfer characteristic to the right or left along the abscissa. Any voltage more negative than the LSB transition gives an output code of 000. In practice, therefore, the voltage at which the 000 to 001 transition

applications information (Continued)

takes place is ascertained, this input voltage's departure from the ideal value is defined as the Zero Scale Error (Offset) and is expressed as a percentage of FS. In the example of *Figure 10*, the offset is 2 LSB's or 0.286% of FS.

The Zero Scale Error of the ADC1210, ADC1211 is caused primarily by offset voltage in the comparator. Because it is common practice to offset the A/D 1/2 LSB to minimize Quantization Error, the offsetting techniques described in the Applications Section may be used to null Zero Scale Error and accomplish the 1/2 LSB offset at the same time.

Full Scale Error (or Gain Error): Full Scale Error is a measure of the difference between the output of an ideal A/D converter and the actual A/D for an input voltage equal to full scale. As shown in *Figure 11*, the Full Scale Error effect is to rotate the transfer characteristic angularly about the origin. Any voltage more positive than the Full Scale transition gives an output code of 111. In practice, therefore, the voltage at which the transition from 111 to 110 occurs is ascertained. The input voltage's departure from the ideal value is defined as Full Scale Error and is expressed as a percentage of FS. In the example of *Figure 11*, Full Scale Error is 1 1/2 LSB's, or 0.214% of FS.

Full Scale Error of the ADC1210, ADC1211 is due primarily to mismatch in the R-2R ladder equivalent output impedance and input resistors R25, R26, R27, and R28. The gain error may be adjusted to zero as outlined in the Applications section.

Monotonicity and Missing Codes: Monotonicity is a property of a D/A which requires an increasing or constant output voltage for an increasing digital input code. Monotonicity of a D/A converter does not, in itself, guarantee that an A/D built with that D/A will not have missing codes. However, the ADC1210 and ADC1211 are guaranteed to have no missing codes.

Conversion Time: The ADC1210, ADC1211 are successive approximation A/D converters requiring 13 clock intervals for a conversion to specified accuracy for the ADC1210 and 11 clocks for the ADC1211. There is a trade-off between accuracy and clock frequency due to settling time of the ladder and propagation delay through the comparator. By modifying the hysteresis network around the comparator, conversions with 10-bit accuracy can be made in 30 μs. Replace R_A, R_B and C_A in *Figure 5* with a 10 MΩ resistor between pin 23 (Comparator Output) and pin 17 (+ IN), and increase the clock rate to 366 kHz.

In order to prevent errors during conversion, the analog input voltage should not be allowed to change by more than ±1/2 LSB. This places a maximum slew rate of 12.5 μV/μs on the analog input voltage. The usual solution to this restriction is to place a Sample and Hold in front of the A/D. See AN-154 for additional information.

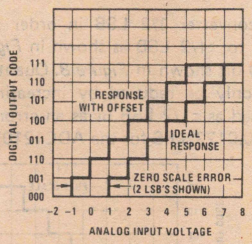

FIGURE 10. A/D Transfer Characteristic with Offset

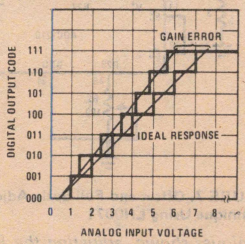

FIGURE 11. Full Scale (Gain Error)

National Semiconductor

A/D Converter Products

DM2502, DM2503, DM2504 Successive Approximation Registers

general description

The DM2502, DM2503 and DM2504 are 8-bit and 12-bit TTL registers designed for use in successive approximation A/D converters. These devices contain all the logic and control circuits necessary in combination with a D/A converter to perform successive approximation analog-to-digital conversions.

The DM2502 has 8 bits with serial capability and is not expandable.

The DM2503 has 8 bits and is expandable without serial capability.

The DM2504 has 12 bits with serial capability and expandability.

All three devices are available in ceramic DIP, ceramic flatpak, and molded Epoxy-B DIPs. The DM2502, DM2503 and DM2504 operate over −55°C to +125°C; the DM2502C, DM2503C and DM2504C operate over 0°C to +70°C.

features

- Complete logic for successive approximation A/D converters
- 8-bit and 12-bit registers
- Capable of short cycle or expanded operation
- Continuous or start-stop operation
- Compatible with D/A converters using any logic code
- Active low or active high logic outputs
- Use as general purpose serial-to-parallel converter or ring counter

logic diagram

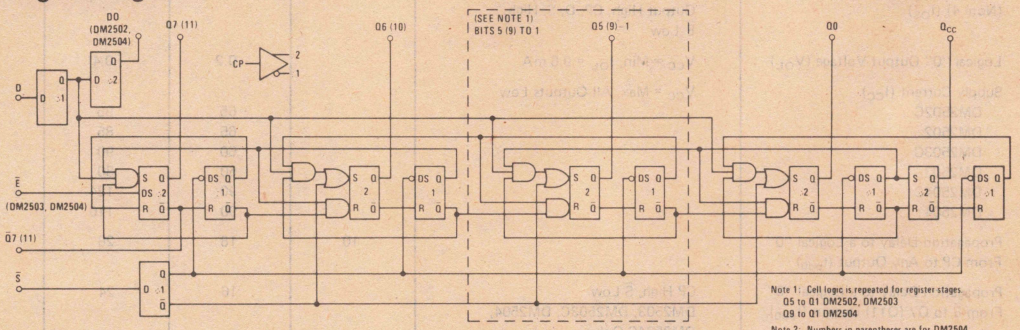

Note 1: Cell logic is repeated for register stages.
Q5 to Q1 DM2502, DM2503
Q9 to Q1 DM2504

Note 2: Numbers in parentheses are for DM2504.

connection diagrams (Dual-In-Line and Flat Packages)

DM2502, DM2503

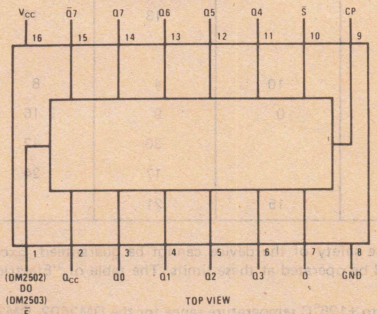

Order Number DM2502J, DM2502CJ, DM2503J, or DM2503CJ
See NS Package J16A

Order Number DM2502CN or DM2503CN
See NS Package N16A

Order Number DM2502W, DM2502CW, DM2503W, or DM2503CW
See NS Package W16A

DM2504

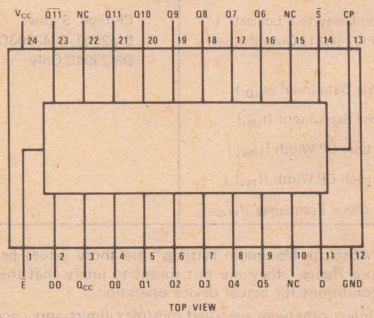

Order Number DM2504F or DM2504CF
See NS Package F24A

Order Number DM2504J or DM2504CJ
See NS Package J24A

Order Number DM2504CN
See NS Package N24A

absolute maximum ratings (Note 1)

Supply Voltage	7V
Input Voltage	5.5V
Output Voltage	5.5V
Storage Temperature Range	−65°C to +150°C
Lead Temperature (Soldering, 10 seconds)	300°C

operating conditions

	MIN	MAX	UNITS
Supply Voltage, V_{CC}			
DM2502C, DM2503C, DM2504C	4.75	5.25	V
DM2502, DM2503, DM2504	4.5	5.5	V
Temperature, T_A			
DM2502C, DM2503C, DM2504C	0	+70	°C
DM2502, DM2503, DM2504	−55	+125	°C

electrical characteristics (Notes 2 and 3) V_{CC} = 5.0V, T_A = 25°C, C_L = 15 pF, unless otherwise specified.

PARAMETER	CONDITIONS	MIN	TYP	MAX	UNITS
Logical "1" Input Voltage (V_{IH})	V_{CC} = Min	2.0			V
Logical "1" Input Current (I_{IH})	V_{CC} = Max				
CP Input	V_{IH} = 2.4V		6	40	μA
D, $\overline{E}$, $\overline{S}$ Inputs	V_{IH} = 2.4V		6	80	μA
All Inputs	V_{IH} = 5.5V			1.0	mA
Logical "0" Input Voltage (V_{IL})	V_{CC} = Min			0.8	V
Logical "0" Input Current (I_{IL})	V_{CC} = Max				
CP, $\overline{S}$ Inputs	V_{IL} = 0.4V		−1.0	−1.6	mA
D, $\overline{E}$ Inputs	V_{IL} = 0.4V		−1.0	−3.2	mA
Logical "1" Output Voltage (V_{OH})	V_{CC} = Min, I_{OH} = −0.48 mA	2.4	3.6		V
Output Short Circuit Current (Note 4) (I_{OS})	V_{CC} = Max; V_{OUT} = 0.0V; Output High; CP, D, $\overline{S}$, High; $\overline{E}$ Low	−10	−20	−45	mA
Logical "0" Output Voltage (V_{OL})	V_{CC} = Min, I_{OL} = 9.6 mA		0.2	0.4	V
Supply Current (I_{CC})	V_{CC} = Max, All Outputs Low				
DM2502C			65	95	mA
DM2502			65	85	mA
DM2503C			60	90	mA
DM2503			60	80	mA
DM2504C			90	124	mA
DM2504			90	110	mA
Propagation Delay to a Logical "0" From CP to Any Output (t_{pd0})		10	18	28	ns
Propagation Delay to a Logical "0" From $\overline{E}$ to Q7 (Q11) Output (t_{pd0})	CP High, $\overline{S}$ Low DM2503, DM2503C, DM2504, DM2504C Only		16	24	ns
Propagation Delay to a Logical "1" From CP to Any Output (t_{pd1})		10	26	38	ns
Propagation Delay to a Logical "1" From $\overline{E}$ to Q7 (Q11) Output (t_{pd1})	CP High, $\overline{S}$ Low DM2503, DM2503C, DM2504, DM2504C Only		13	19	ns
Set-Up Time Data Input ($t_{s(D)}$)		−10	4	8	ns
Set-Up Time Start Input ($t_{s(\overline{S})}$)		0	9	16	ns
Minimum Low CP Width (t_{PWL})			30	42	ns
Minimum High CP Width (t_{PWH})			17	24	ns
Maximum Clock Frequency (f_{MAX})		15	21		MHz

Note 1: "Absolute Maximum Ratings" are those values beyond which the safety of the device cannot be guaranteed. Except for "Operating Temperature Range" they are not meant to imply that the devices should be operated at these limits. The table of "Electrical Characteristics" provides conditions for actual device operation.

Note 2: Unless otherwise specified min/max limits apply across the −55°C to +125°C temperature range for the DM2502, DM2503 and DM2504, and across the 0°C to +70°C range for the DM2502C, DM2503C and DM2504C. All typicals are given for V_{CC} = 5.0V and T_A = 25°C.

Note 3: All currents into device pins shown as positive, out of device pins as negative, all voltages referenced to ground unless otherwise noted. All values shown as max or min on absolute value basis.

Note 4: Only one output at a time should be shorted.

application information

OPERATION

The registers consist of a set of master latches that act as the control elements in the device and change state on the input clock high-to-low transition and a set of slave latches that hold the register data and change on the input clock low-to-high transition. Externally the device acts as a special purpose serial-to-parallel converter that accepts data at the D input of the register and sends the data to the appropriate slave latch to appear at the register output and the DO output on the DM2502 and DM2504 when the clock goes from low-to-high. There are no restrictions on the data input; it can change state at any time except during a short interval centered about the clock low-to-high transition. At the same time that data enters the register bit the next less significant bit register is set to a low ready for the next iteration.

The register is reset by holding the $\overline{S}$ (Start) signal low during the clock low-to-high transition. The register synchronously resets to the state Q7 (11) low, and all the remaining register outputs high. The Q_{CC} (Conversion Complete) signal is also set high at this time. The $\overline{S}$ signal should not be brought back high until after the clock low-to-high transition in order to guarantee correct resetting. After the clock has gone high resetting the register, the $\overline{S}$ signal must be removed. On the next clock low-to-high transition the data on the D input is set into the Q7 (11) register bit and the Q6 (10) register bit is set to a low ready for the next clock cycle. On the next clock low-to-high transition data enters the Q6 (10) register bit and Q5 (9) is set to a low. This operation is repeated for each register bit in turn until the register has been filled. When the data goes into Q0, the Q_{CC} signal goes low, and the register is inhibited from further change until reset by a Start signal.

The DM2502, DM2503 and DM2504 have a specially tailored two-phase clock generator to provide non-overlapping two-phase clock pulses (i.e., the clock waveforms intersect below the thresholds of the gates they drive). Thus, even at very slow dV/dt rates at the clock input (such as from relatively weak comparator outputs), improper logic operation will not result.

LOGIC CODES

All three registers can be operated with various logic codes. Two's complement code is used by offsetting the comparator 1/2 full range + 1/2 LSB and using the complement of the MSB ($\overline{Q}7$ or $\overline{Q}11$) with a binary D/A converter. Offset binary is used in the same manner but with the MSB (Q7 or Q11). BCD D/A converters can be used with the addition of illegal code suppression logic.

ACTIVE HIGH OR ACTIVE LOW LOGIC

The register can be used with either D/A converters that require a low voltage level to turn on, or D/A converters that require a high voltage level to turn the switch on. If D/A converters are used which turn on with a low logic level, the resulting digital output from the register is active low. That is, a logic "1" is represented as a low voltage level. If D/A converters are used that turn on with a high logic level then the digital output is active high; a logic "1" is represented as a high voltage level.

EXPANDED OPERATION

An active low enable input, $\overline{E}$, on the DM2503 and DM2504 allows registers to be connected together to form a longer register by connecting the clock, D, and $\overline{S}$ inputs in parallel and connecting the Q_{CC} output of one register to the $\overline{E}$ input of the next less significant register. When the start signal resets the register, the $\overline{E}$ signal goes high, forcing the Q7 (11) bit high and inhibiting the register from accepting data until the previous register is full and its Q_{CC} goes low. If only one register is used the $\overline{E}$ input should be held at a low logic level.

timing diagram

DM2502, DM2503

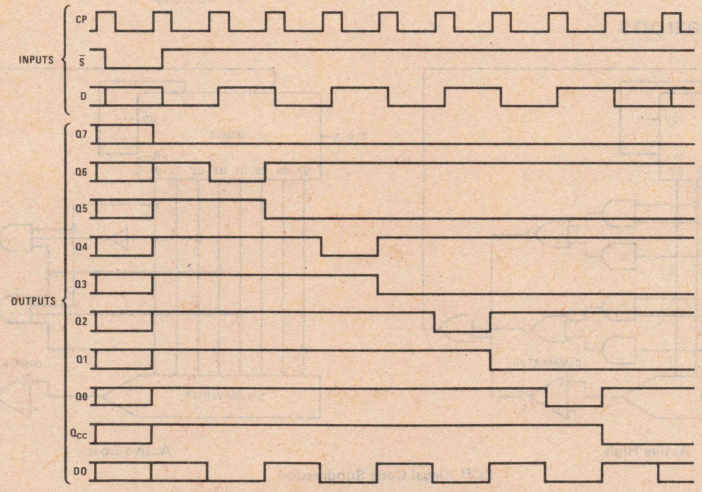

application information (con't)

SHORT CYCLE

If all bits are not required, the register may be truncated and conversion time saved by using a register output going low rather than the Q_{CC} signal to indicate the end of conversion. If the register is truncated and operated in the continuous conversion mode, a lock-up condition may occur on power turn-on. This condition can be avoided by making the start input the OR function of Q_{CC} and the appropriate register output.

COMPARATOR BIAS

To minimize the digital error below ±1/2 LSB, the comparator must be biased. If a D/A converter is used which requires a low voltage level to turn on, the comparator should be biased +1/2 LSB. If the D/A converter requires a high logic level to turn on, the comparator must be biased −1/2 LSB.

definition of terms

CP: The clock input of the register.

D: The serial data input of the register.

DO: The serial data out. (The D input delayed one bit).

$\overline{E}$: The register enable. This input is used to expand the length of the register and when high forces the Q7 (11) register output high and inhibits conversion. When not used for expansion the enable is held at a low logic level (ground).

Q_i i = 7 (11) to 0: The outputs of the register.

Q_{CC}: The conversion complete output. This output remains high during a conversion and goes low when a conversion is complete.

Q7 (11): The true output of the MSB of the register.

$\overline{Q7}$ (11): The complement output of the MSB of the register.

$\overline{S}$: The start input. If the start input is held low for at least a clock period the register will be reset to Q7 (11) low and all the remaining outputs high. A start pulse that is low for a shorter period of time can be used if it meets the set-up time requirements of the $\overline{S}$ input.

truth table

DM2502, DM2503

TIME	INPUTS			OUTPUTS[1]									
t_n	D	$\overline{S}$	$\overline{E}$[2]	D0[3]	Q7	Q6	Q5	Q4	Q3	Q2	Q1	Q0	Q_{CC}
0	X	L	L	X	X	X	X	X	X	X	X	X	X
1	D7	H	L	X	L	H	H	H	H	H	H	H	H
2	D6	H	L	D7	D7	L	H	H	H	H	H	H	H
3	D5	H	L	D6	D7	D6	L	H	H	H	H	H	H
4	D4	H	L	D5	D7	D6	D5	L	H	H	H	H	H
5	D3	H	L	D4	D7	D6	D5	D4	L	H	H	H	H
6	D2	H	L	D3	D7	D6	D5	D4	D3	L	H	H	H
7	D1	H	L	D2	D7	D6	D5	D4	D3	D2	L	H	H
8	D0	H	L	D1	D7	D6	D5	D4	D3	D2	D1	L	H
9	X	H	L	D0	D7	D6	D5	D4	D3	D2	D1	D0	L
10	X	X	L	X	D7	D6	D5	D4	D3	D2	D1	D0	L
	X	X	H	X	H	NC	NC	NC	NC	NC	NC	NC	NC

Note 1: Truth table for DM2504 is extended to include 12 outputs.
Note 2: Truth table for DM2502 does not include $\overline{E}$ column or last line in truth table shown.
Note 3: Truth table for DM2503 does not include D0 column.

H = High Voltage Level
L = Low Voltage Level
X = Don't Care
NC = No Change

typical applications

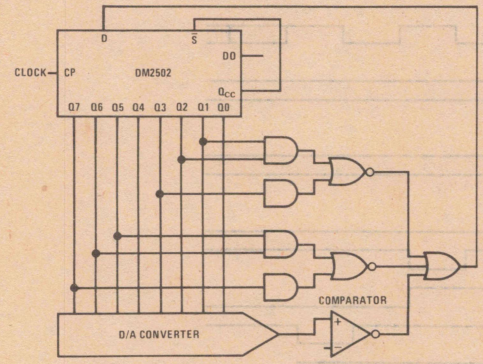

Active High

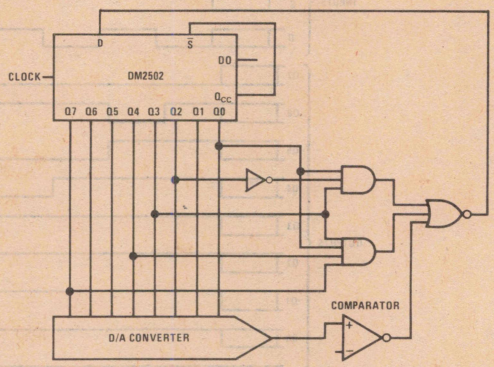

Active Low

BCD Illegal Code Suppression

switching time waveforms

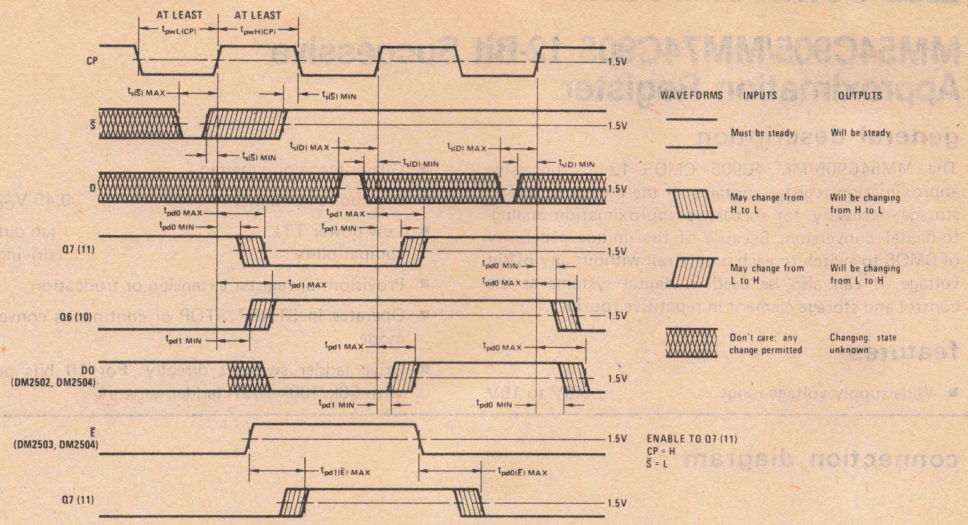

National Semiconductor

MM54C905/MM74C905 12-Bit Successive Approximation Register

general description

The MM54C905/MM74C905 CMOS 12-bit successive approximation register contains all the digit control and storage necessary for successive approximation analog-to-digital conversion. Because of the unique capability of CMOS to switch to each supply rail without any offset voltage, it can also be used in digital systems as the control and storage element in repetitive routines.

features

- Wide supply voltage range — 3.0V to 15V
- Guaranteed noise margin — 1.0V
- High noise immunity — 0.45 V_{CC} typ
- Low power TTL compatibility — fan out of 2 driving 74L
- Provision for register extension or truncation
- Operates in START/STOP or continuous conversion mode
- Drive ladder switches directly. For 10 bits or less with 50k/100k R/2R ladder network

connection diagram

Dual-In-Line Package

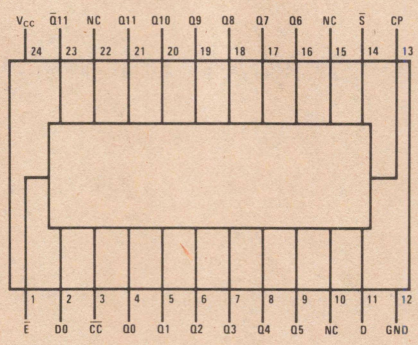

Order Numbers
MM54C905D
MM74C905D
See Package D24A

Order Number
MM74C905N
See Package N24A

truth table

TIME	INPUTS			OUTPUTS													
t_n	D	$\bar{S}$	$\bar{E}$	D0	Q11	Q10	Q9	Q8	Q7	Q6	Q5	Q4	Q3	Q2	Q1	Q0	$\overline{CC}$
0	X	L	L	X	X	X	X	X	X	X	X	X	X	X	X	X	X
1	D11	H	L	X	L	H	H	H	H	H	H	H	H	H	H	H	H
2	D10	H	L	D11	D11	L	H	H	H	H	H	H	H	H	H	H	H
3	D9	H	L	D10	D11	D10	L	H	H	H	H	H	H	H	H	H	H
4	D8	H	L	D9	D11	D10	D9	L	H	H	H	H	H	H	H	H	H
5	D7	H	L	D8	D11	D10	D9	D8	L	H	H	H	H	H	H	H	H
6	D6	H	L	D7	D11	D10	D9	D8	D7	L	H	H	H	H	H	H	H
7	D5	H	L	D6	D11	D10	D9	D8	D7	D6	L	H	H	H	H	H	H
8	D4	H	L	D5	D11	D10	D9	D8	D7	D6	D5	L	H	H	H	H	H
9	D3	H	L	D4	D11	D10	D9	D8	D7	D6	D5	D4	L	H	H	H	H
10	D2	H	L	D3	D11	D10	D9	D8	D7	D6	D5	D4	D3	L	H	H	H
11	D1	H	L	D2	D11	D10	D9	D8	D7	D6	D5	D4	D3	D2	L	H	H
12	D0	H	L	D1	D11	D10	D9	D8	D7	D6	D5	D4	D3	D2	D1	L	H
13	X	H	L	D0	D11	D10	D9	D8	D7	D6	D5	D4	D3	D2	D1	D0	L
14	X	X	L	X	D11	D10	D9	D8	D7	D6	D5	D4	D3	D2	D1	D0	L
	X	X	H	X	H	NC	NC	NC	NC	NC	NC	NC	NC	NC	NC	NC	NC

H = High level L = Low level X = Don't care NC = No change

absolute maximum ratings (Note 1)

Voltage at Any Pin	−0.3V to V_{CC} +0.3V
Operating Temperature Range	
MM54C905	−55°C to +125°C
MM74C905	−40°C to +85°C
Storage Temperature Range	−65°C to +150°C
Package Dissipation	500 mW
Operating V_{CC} Range	3.0V to 15V
Absolute Maximum V_{CC}	16V
Lead Temperature (Soldering, 10 seconds)	300°C

dc electrical characteristics

Min/max limits apply across temperature range, unless otherwise noted.

PARAMETER	CONDITIONS	MIN	TYP	MAX	UNITS
CMOS TO CMOS					
Logical "1" Input Voltage ($V_{IN(1)}$)	V_{CC} = 5.0V	3.5			V
	V_{CC} = 10V	8.0			V
Logical "0" Input Voltage ($V_{IN(0)}$)	V_{CC} = 5.0V			1.5	V
	V_{CC} = 10V			2.0	V
Logical "1" Output Voltage ($V_{OUT(1)}$)	V_{CC} = 5.0V, I_O = −10μA	4.5			V
	V_{CC} = 10V, I_O = −10μA	9.0			V
Logical "0" Output Voltage ($V_{OUT(0)}$)	V_{CC} = 5.0V, I_O = 10μA			0.5	V
	V_{CC} = 10V, I_O = 10μA			1.0	V
Logical "1" Input Current ($I_{IN(1)}$)	V_{CC} = 15V, V_{IN} = 15V		0.005	1.0	μA
Logical "0" Input Current ($I_{IN(0)}$)	V_{CC} = 15V, V_{IN} = 0V	−1.0	−0.005		μA
Supply Current (I_{CC})	V_{CC} = 15V		0.05	300	μA
CMOS/LPTTL INTERFACE					
Logical "1" Input Voltage ($V_{IN(1)}$)					
MM54C905	V_{CC} = 4.5V	V_{CC}−1.5			V
MM74C905	V_{CC} = 4.75V	V_{CC}−1.5			V
Logical "0" Input Voltage ($V_{IN(0)}$)					
MM54C905	V_{CC} = 4.5V			0.8	V
MM74C905	V_{CC} = 4.75V			0.8	V
Logical "1" Output Voltage ($V_{OUT(1)}$)					
MM54C905	V_{CC} = 4.5V, I_O = −360μA	2.4			V
MM74C905	V_{CC} = 4.75V, I_O = −360μA	2.4			V
Logical "0" Output Voltage ($V_{OUT(0)}$)					
MM54C905	V_{CC} = 4.5V, I_O = 360μA			0.4	V
MM74C905	V_{CC} = 4.75V, I_O = 360μA			0.4	V
OUTPUT DRIVE (See 54C/74C Family Characteristics Data Sheet)					
Output Source Current (I_{SOURCE}) (P-Channel)	V_{CC} = 5.0V, V_{OUT} = 0V, T_A = 25°C	−1.75	−3.3		mA
Output Source Current (I_{SOURCE}) (P-Channel)	V_{CC} = 10V, V_{OUT} = 0V, T_A = 25°C	−8.0	−15		mA
Output Sink Current (I_{SINK}) (N-Channel)	V_{CC} = 5.0V, V_{OUT} = V_{CC}, T_A = 25°C	1.75	3.6		mA
Output Sink Current (I_{SINK}) (N-Channel)	V_{CC} = 10V, V_{OUT} = V_{CC}, T_A = 25°C	8.0	16		mA
Q11–Q0 Outputs	V_{CC} = 10V ±5%				
R_{SOURCE}	V_{OUT} = V_{CC} − 0.3V, T_A = 25°C	150		350	Ω
R_{SINK}	V_{CC} = 10V ±5%, V_{OUT} = 0.3V, T_A = 25°C	80		230	Ω

ac electrical characteristics $T_A = 25°C$, $C_L = 50$ pF, unless otherwise specified.

PARAMETER	CONDITIONS	MIN	TYP	MAX	UNITS
Propagation Delay Time From Clock Input To Outputs (Q0–Q11) ($t_{pd(Q)}$)	$V_{CC} = 5.0V$		200	350	ns
	$V_{CC} = 10V$		80	150	ns
Propagation Delay Time From Clock Input To D_O ($t_{pd(D_O)}$)	$V_{CC} = 5.0V$		180	325	ns
	$V_{CC} = 10V$		70	125	ns
Propagation Delay Time From Register Enable ($\overline{E}$) To Output (Q11) ($t_{pd(\overline{E})}$)	$V_{CC} = 5.0V$		190	350	ns
	$V_{CC} = 10V$		75	150	ns
Propagation Delay Time From Clock To $\overline{CC}$ ($t_{pd(\overline{CC})}$)	$V_{CC} = 5.0V$		190	350	ns
	$V_{CC} = 10V$		75	0.50	ns
Data Input Set-Up Time (t_{DS})	$V_{CC} = 5.0V$	80			ns
	$V_{CC} = 10V$	30			ns
Start Input Set-Up Time (t_{SS})	$V_{CC} = 5.0V$	80			ns
	$V_{CC} = 10V$	30			ns
Minimum Clock Pulse Width (t_{PWL}, t_{PWH})	$V_{CC} = 5.0V$	250	125		ns
	$V_{CC} = 10V$	100	50		ns
Maximum Clock Rise and Fall Time (t_r, t_f)	$V_{CC} = 5.0V$			15	μs
	$V_{CC} = 10V$			5	μs
Maximum Clock Frequency (f_{MAX})	$V_{CC} = 5.0V$	2	4		MHz
	$V_{CC} = 10V$	5	10		MHz
Clock Input Capacitance (C_{CLK})	Clock Input (Note 2)		10		pF
Input Capacitance (C_{IN})	Any Other Input (Note 2)		5		pF
Power Dissipation Capacitance (C_{PD})	(Note 3)		100		pF

Note 1: "Absolute Maximum Ratings" are those values beyond which the safety of the device cannot be guaranteed. Except for "Operating Temperature Range" they are not meant to imply that the devices should be operated at these limits. The table of "Electrical Characteristics" provides conditions for actual device operation.

Note 2: Capacitance is guaranteed by periodic testing.

Note 3: C_{PD} determines the no load ac power consumption of any CMOS device. For complete explanation see 54C/74C Family Characteristics application note, AN-90.

typical performance characteristics

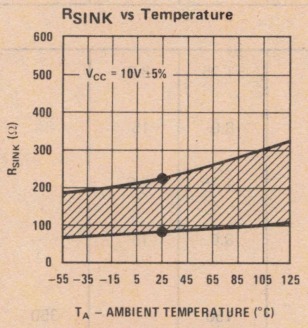

● These points are guaranteed by automatic testing.

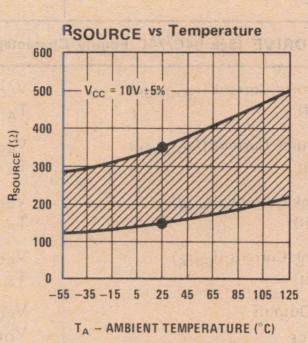

● These points are guaranteed by automatic testing.

timing diagram

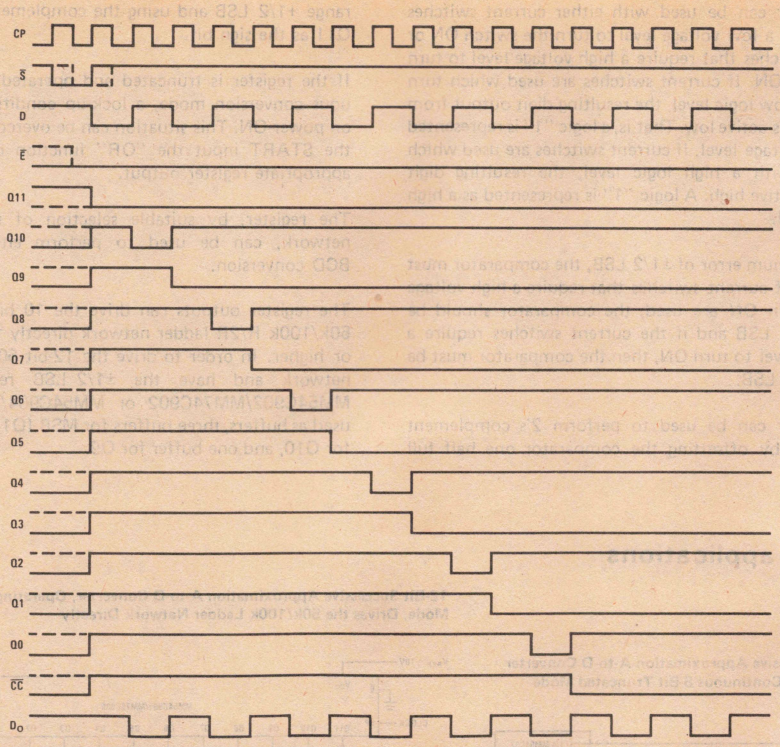

switching time waveforms

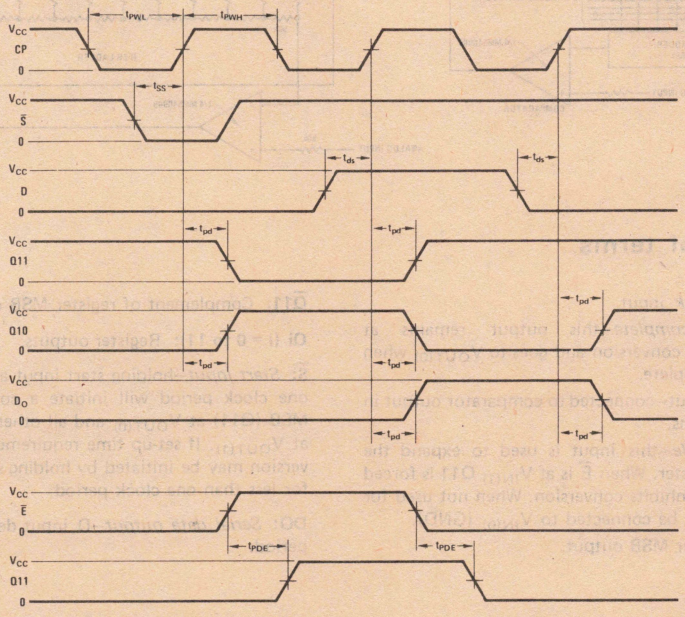

USER NOTES FOR A/D CONVERSION

The register can be used with either current switches that require a low voltage level to turn the switch ON or current switches that require a high voltage level to turn the switch ON. If current switches are used which turn ON with a low logic level, the resulting digit output from the register is active low. That is, a logic "1" is represented as a low voltage level. If current switches are used which turn ON with a high logic level, the resulting digit output is active high. A logic "1" is represented as a high voltage level.

For a maximum error of ±1/2 LSB, the comparator must be biased. If current switches that require a high voltage level to turn ON are used, the comparator should be biased +1/2 LSB and if the current switches require a low logic level to turn ON, then the comparator must be biased −1/2 LSB.

The register can be used to perform 2's complement conversion by offsetting the comparator one half full range +1/2 LSB and using the complement of the MSB Q11 as the sign bit.

If the register is truncated and operated in the continuous conversion mode, a lock-up condition may occur on power-ON. This situation can be overcome by making the START input the "OR" function of $\overline{CC}$ and the appropriate register output.

The register, by suitable selection of register ladder network, can be used to perform either binary or BCD conversion.

The register outputs can drive the 10 bits or less with 50k/100k R/2R ladder network directly for V_{CC} = 10V or higher. In order to drive the 12-bit 50k/100k ladder network and have the ±1/2 LSB resolution, the MM54C902/MM74C902 or MM54C904/MM74C904 is used as buffers, three buffers for MSB (Q11), two buffers for Q10, and one buffer for Q9.

typical applications

12-Bit Successive Approximation A-to-D Converter Operating in Continuous 8-Bit Truncated Mode

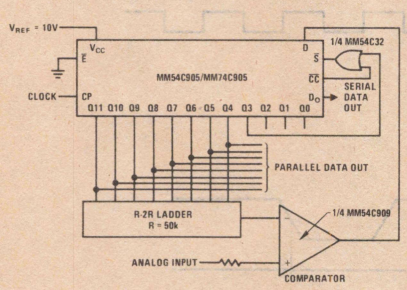

12-Bit Successive Approximation A-to-D Converter, Operating in Continuous Mode, Drives the 50k/100k Ladder Network Directly

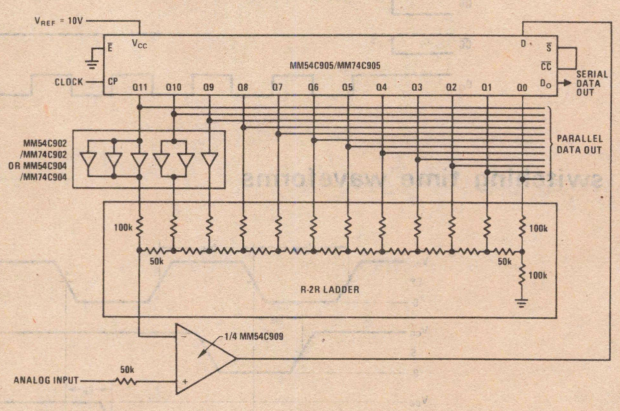

definition of terms

CP: Register *clock* input.

$\overline{CC}$: *Conversion complete*—this output remains at $V_{OUT(1)}$ during a conversion and goes to $V_{OUT(0)}$ when conversion is complete.

D: Serial *data* input—connected to comparator output in A-to-D applications.

$\overline{E}$: *Register enable*—this input is used to expand the length of the register. When $\overline{E}$ is at $V_{IN(1)}$ Q11 is forced to $V_{OUT(1)}$ and inhibits conversion. When not used for expansion $\overline{E}$ must be connected to $V_{IN(0)}$ (GND).

Q11: True register MSB output.

$\overline{Q11}$: Complement of register MSB output.

Qi (i = 0 to 11): Register outputs.

$\overline{S}$: *Start input*—holding start input at $V_{IN(0)}$ for at least one clock period will initiate a conversion by setting MSB (Q11) at $V_{OUT(0)}$ and all other output (Q10—Q0) at $V_{OUT(1)}$. If set-up time requirements are met, a conversion may be initiated by holding start input at $V_{IN(0)}$ for less than one clock period.

DO: *Serial data output*—D input delayed by one clock period.

Section 12

D/A Converters

12

Section 12. Digital-to-Analog Converters

Resolution	Linearity Error	Output Voltage Ranges	Internal Reference	Input Logic Format	Settling Time	Part Number	Page Number
12 bits	±0.0122%	±10.24V, +10.24V	10.240V	Comp. Binary	5.0μs	DAC1200	12-4
12 bits	±0.0488%	±10.24V, +10.24V	10.240V	Comp. Binary	5.0μs	DAC1201	12-4
3 digits	±0.01%	±10V, +10V	10.000V	Comp. BCD	5.0μs	DAC1202	12-4
3 digits	±0.05%	±10V, +10V	10.000V	Comp. BCD	5.0μs	DAC1203	12-4
12 bits	±0.0122%	±10V, ±5V, ±2.5V, +5V	6.3V	Comp. Binary	5.0μs	DAC1280	12-11
12 bits	±0.0122%	±10V, ±5V, ±2.5V, +5V	6.3V	Comp. Binary	5.0μs	DAC1285	12-11
3 digits	±0.05%	+10V	6.3V	Comp. BCD	5.0μs	DAC1286	12-11
3 digits	±0.1%	+10V	6.3V	Comp. BCD	5.0μs	DAC1287	12-11

Note: For additional information on monolithic converters see the *Data Acquisition Handbook*.

National Semiconductor

D/A Converter Products

DAC1200/DAC1201
12-Bit (Binary) Digital-to-Analog Converters
DAC1202/DAC1203
3-Digit (BCD) Digital-to-Analog Converters

General Description

The DAC1200 series of D/A converters is a family of precision low-cost converter building blocks intended to fulfill a wide range of industrial and military D/A applications. These devices are complete functional blocks requiring only application of power for operation. The design combines a precision 12-bit weighted current source (12 current switches and 12-bit thin-film resistor network), a rapid-settling operational amplifier, and 10.24V (for binary series) or 10.00V (for BCD series) buffered reference.

Input coding options include complementary binary and complementary BCD formats. In all instances, a logic "low" (≤ 0.8V) turns a given bit ON, and a logic "high" (≥ 2.0V) turns the bit OFF. Output format may be programmed for bipolar (±10V) or unipolar (0 to 10V) operation using internally supplied thin-film resistor pin strap options. Current mode operation is also available from 0 to 2 mA (for binary) or 0 to 1.25 mA (for BCD).

The entire series is available in hermetically sealed 24-lead DIP.

Features

- Circuit completely self-contained
- Both current and voltage-mode outputs
- Standard power supplies: ±15V and +5V
- Internal buffered reference: 10.24V for binary
  10.00V for BCD
- 0 to 2 mA, ±10V or 0 to 10V output by strapping internal resistors; other scales by external resistors
- ±1/2 LSB (binary) or ±1/10 LSD (BCD) linearity
- Fast settling time: 1.5 μs in current mode
  2.5 μs in voltage mode
- High slew rate: 15 V/μs
- TTL and CMOS compatible complementary binary or BCD input logic format
- 12 bit linearity
- Standard dual-width DIP package

Block and Connection Diagrams

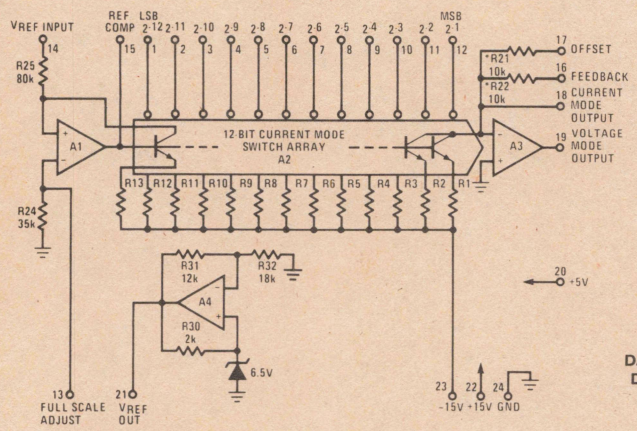

Dual-In-Line Package

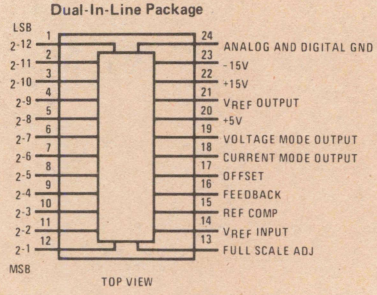

Order Number DAC1200HD, DAC1200HCD, DAC1201HD, DAC1201HCD, DAC1202HD, DAC1202HCD, DAC1203HD, DAC1203HCD

See Package D24D

*R21 = R22 = 16k for DAC1202/1203 (BCD)

Absolute Maximum Ratings

Supply Voltage (V^+ & V^-)	±18V
Logic Supply Voltage (V_{CC})	+10V
Logic Input Voltage	−0.7V to +18V
Reference Input Voltage	−0V, +18V
Power Dissipation	(see graphs)
Short Circuit Duration (pins 18, 19 & 21)	Continuous
Operating Temperature Range	
DAC1200HD, DAC1201HD, DAC1202HD, DAC1203HD	−55°C to +125°C
DAC1200HCD, DAC1201HCD, DAC1202HCD, DAC1203HCD	−25°C to +85°C
Storage Temperature Range	−65°C to +150°C
Lead Temperature (soldering, 10 sec.)	300°C

DC Electrical Characteristics DAC1200/1201 Binary D/A (Notes 1, 2)

PARAMETER	CONDITIONS	DAC1200/1200C			DAC1201/1201C			UNITS
		MIN	TYP	MAX	MIN	TYP	MAX	
Resolution		12			12			Bits
Linearity Error (Note 3)	$T_A = 25°C$			±0.0122			±0.0488	% FS
				±0.0244			±0.0976	% FS
Offset Voltage	$T_A = 25°C$		1	5		1	10	mV
				10			15	mV
Voltage Mode Full-Scale Error (Note 3)	$V_{REF} = 10.240V$		0.01	0.1		0.02	0.2	% FS
Voltage Mode Full-Scale Error	Pin 21 connected to Pin 14, $T_A = 25°C$		0.1	0.6		0.1	0.7	% FS
Monotonicity (Notes 3, 4)		Guaranteed over the temperature range						
Voltage Mode Power Supply Sensitivity	$\Delta V^+ = \pm 2V$, $T_A = 25°C$		0.002	0.02		0.002	0.02	% FS/V
	$\Delta V^- = \pm 2V$, $V_{REF} = 10.240V$		0.002	0.02		0.002	0.02	% FS/V
	$\Delta V_{CC} = \pm 1V$		0.002	0.02		0.002	0.02	% FS/V
Output Voltage Range	$R_L = 5k$	±10.5	±12		±10.5	±12		V
Voltage Mode Output Short Circuit Current Limit	$T_A = 25°C$		20	50		20	50	mA
Current Mode Voltage Compliance	(Note 6)	±2.5			±2.5			V
Current Mode Output Impedance			15			15		kΩ
Reference Voltage	$0mA \leq I_{REF} \leq 2mA$, $T_A = 25°C$	10.190	10.240	10.290	10.190	10.240	10.290	V
Logic "1" Input Voltage (Bit OFF)		2.0			2.0			V
Logic "0" Input Voltage (Bit ON)				0.8			0.8	V
Logic "1" Input Current (Bit OFF)	$V_{IN} = 2.5V$		1	10		1	10	μA
Logic "0" Input Current (Bit ON)	$V_{IN} = 0V$		-10	-100		-10	-100	μA
Power Supply Current I^+	$V^+ = 15.0V$, $T_A = 25°C$		10	15		10	15	mA
Power Supply Current I^-	$V^- = -15.0V$		25	30		25	30	mA
Power Supply Current I_{CC}	$V_{CC} = 5.0V$		20	25		20	25	mA

DC Electrical Characteristics DAC1202/1203 3-Digit BCD D/A (Notes 1, 2)

PARAMETER	CONDITIONS	DAC1202/1202C MIN	DAC1202/1202C TYP	DAC1202/1202C MAX	DAC1203/1203C MIN	DAC1203/1203C TYP	DAC1203/1203C MAX	UNITS
Resolution		3			3			Digits
Linearity Error (Note 5)	$T_A = 25°C$			0.025 0.05			0.05 0.1	% FS % FS
Offset Voltage	$T_A = 25°C$		1	5 10		1	10 15	mV mV
Voltage Mode Full-Scale Error (Note 5)	$V_{REF} = 10.000V$		0.01	0.1		0.02	0.2	% FS
Voltage Mode Full-Scale Error	Pin 21 connected to Pin 14, $T_A = 25°C$		0.5	0.6			0.7	% FS
Monotonicity (Notes 4, 5)		Guaranteed over the temperature range						
Voltage Mode Power Supply Sensitivity	$\Delta V^+ = \pm 2V$ $\Delta V^- = \pm 2V$ $\Delta V_{CC} = \pm 1V$ $T_A = 25°C$ $V_{REF} = 10.000V$		0.002 0.002 0.002	0.02 0.02 0.02		0.002 0.002 0.002	0.02 0.02 0.02	% FS/V % FS/V % FS/V
Voltage Mode Output Voltage Range	$R_L = 5k$	±10.5	±12		±10.5	±12		V
Voltage Mode Output Short Circuit Limit	$T_A = 25°C$		20	50		20	50	mA
Current Mode Compliance	(Note 6)	±2.5			±2.5			V
Current Mode Output Impedance			10			10		kΩ
Reference Voltage	$0 \leq I_{REF} \leq 2mA$, $T_A = 25°C$	9.950	10.000	10.050	9.950	10.000	10.050	V
Logic "1" Input Voltage (Bit OFF)		2.0			2.0			V
Logic "0" Input Voltage (Bit ON)				0.8			0.8	V
Logic "1" Input Current (Bit OFF)	$V_{IN} = 2.5V$		1	10		1	10	μA
Logic "0" Input Current (Bit ON)	$V_{IN} = 0V$		−10	−100		−10	−100	μA
Power Supply Current I^+	$V^+ = 15.0V$		10	15		10	15	mA
Power Supply Current I^-	$V^- = -15.0V$ $T_A = 25°C$		25	30		25	30	mA
Power Supply Current I_{CC}	$V_{CC} = 5.0V$		20	25		20	25	mA

AC Electrical Characteristics DAC1200/1201/1202/1203

PARAMETER	CONDITIONS ($T_A = 25°C$)	MIN	TYP	MAX	UNITS
Voltage Mode ±1 LSB Settling Time (Note 6)	DAC1200/1202, $V_\epsilon \leq 1.25$ mV		1.5	3.0	μs
	DAC1201/1203, $V_\epsilon \leq 5.0$ mV		1	3.0	μs
Voltage Mode Full-Scale Change Settling Time (Note 6)	DAC1200/1202, $V_\epsilon \leq 1.25$ mV		2.5	5.0	μs
	DAC1201/1203, $V_\epsilon \leq 5.0$ mV		2.0	5.0	μs
Current Mode Full-Scale Settling Time	$R_L = 1k\Omega$, $C_L \leq 20pF$ $0 \leq \Delta I_{OUT} \leq 2mA$		1.5		μs
Voltage Mode Slew Rate	$-10V \leq \Delta V_{OUT} \leq +10V$		15		V/μs

Note 1: Unless otherwise noted, these specifications apply for $V^+ = 15.0V$, $V^- = -15.0V$, and $V_{CC} = 5.0V$ over the temperature range −55°C to +125°C for the DAC1200HD/1201/1202/1203 and −25°C to +85°C for the DAC1200HCD/1201/1202/1203.

Note 2: All typical values are for $T_A = 25°C$.

Note 3: Unless otherwise noted, this specification applies for $V_{REF} = 10.24V$, and over the temperature range −25°C to +85°C. Testing conditions include adjustment of offset to 0V and full-scale to 10.2375V.

Note 4: The DAC1200, DAC1202 and DAC1203 are tested for monotonicity by stimulating all bits; the DAC1201 is tested for monotonicity by stimulating only the 10 MSBs and holding the 2 LSBs at 2.0V (i.e., 2 LSBs are OFF).

Note 5: Unless otherwise noted, this specification applies for $V_{REF} = 10.000V$, and over the temperature range −25°C to +85°C. Testing conditions include adjustment of offset to 0V and full-scale to 9.990V.

Note 6: Not tested — guaranteed by design.

Note 7: ($\Delta V_{OUT} = 10V$)

Typical Performance Characteristics

Maximum Power Dissipation

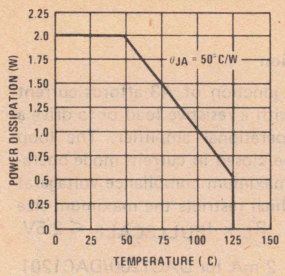

Supply Current vs Temperature

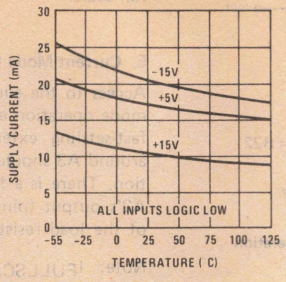

Supply Current vs Temperature

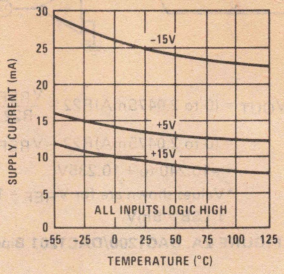

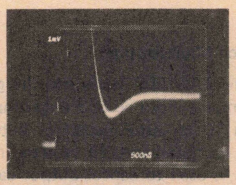

1 LSB Transition
1011 . . . 1 → 1100 . . . 0
V_O = 0, 10V
C_F = 30pF
T_A = 25°C

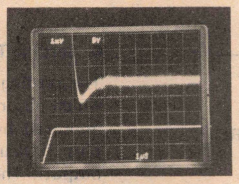

10V Full Scale Settling Time

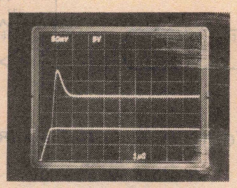

10V Full Scale Pulse Response

Applications Information

1. Introduction

The DAC1200 series D/A converters are designed to minimize adjustments and user-supplied external components. For example, included in the package are a buffered reference, offset nulled output amplifier, and application resistors as well as the basic 12-bit current mode D/A.

However, the DAC1200 series is a sophisticated building block. **Its principles of operation and the following applications information should be read before applying power to the device.**

The user is referred to National Semiconductor Application Notes AN-156 and AN-157 for additional information.

2. Power Supply Selection & Decoupling

Selection of power supplies is important in applications requiring 0.01% accuracy. The ±15V supplies should be well regulated (±15V ± 0.1%) with less than 0.5mVrms of output noise and hum.

To realize the full speed capability of the device, all three power supply leads should be bypassed with 1μF tantalum electrolytic capacitors in shunt with 0.01μF ceramic disc capacitors no farther than ½ inch from the device package.

3. Unipolar and Bipolar Operation

The DAC1200 series D/A's may be configured for either unipolar or bipolar operation using resistors provided with the device. Figures 1A and 1B illustrate the proper connection for binary and BCD unipolar operation.

Bipolar operation is accomplished by offsetting the output amplifier A3 as shown in figures 2A and 2B.

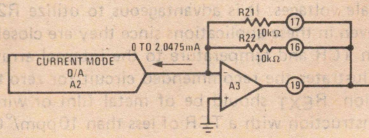

$$^{*}V_{OUT} = (I_{ZERO} \text{ to } I_{FULLSCALE})\left(\frac{R21 \cdot R22}{R21 + R22}\right)$$

$$= (0\text{mA to } 2.0475\text{mA})(5\text{k}\Omega)$$

$$= 0\text{V to } +10.2375\text{V}$$

*Values shown are for V_{REF} = 10.240V.

$$1 \text{ LSB Voltage Step} = \frac{10.240\text{V}}{4096} = 2.5\text{mV}.$$

$$1 \text{ LSB Current Step} = \frac{2.5\text{mV}}{5.0\text{k}\Omega} = 0.5\mu\text{A}$$

FIGURE 1A. DAC1200/DAC1201 Unipolar Operation

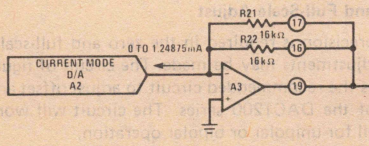

$$^{*}V_{OUT} = (I_{ZERO} \text{ to } I_{FULLSCALE})\left(\frac{R21 \cdot R22}{R21 + R22}\right)$$

$$= (0 \text{ to } 1.24875\text{mA})(8\text{k}\Omega)$$

$$= 0\text{V to } 9.990\text{V}$$

*Values shown are for V_{REF} = 10.000V.

$$1 \text{ LSD Voltage Step} = \frac{10.000}{1000} = 10\text{mV}$$

$$1 \text{ LSD Current Step} = \frac{10\text{mV}}{8\text{k}\Omega} = 1.25\mu\text{A}$$

FIGURE 1B. DAC1202/DAC1203 Unipolar Operation

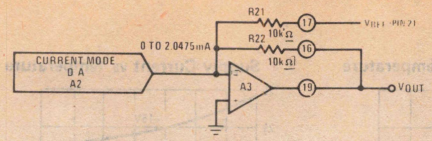

$$^{*}V_{OUT} = (0 \text{ to } 2.0475\text{mA})R22 - \frac{V_{REF}}{R22} R21$$

$$= (0 \text{ to } 2.0475\text{mA})R22 - V_{REF},\ R21 \equiv R22$$

$$= -10.240 \text{ to } +10.235\text{V}$$

*Values shown are for V_{REF} = 10.240V
1 LSB = 5mV.

FIGURE 2A. DAC1200/DAC1201 Bipolar Operation

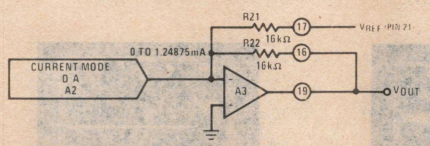

$$^{*}V_{OUT} = (0\text{mA to } 1.24875\text{mA})(R22) - \frac{R22}{R21} V_{REF}$$

$$= -10.000\text{V to } +9.80\text{V}$$

*Values shown are for V_{REF} = 10.000V.
1 LSD Voltage Step = 20mV.

FIGURE 2B. DAC1202/DAC1203 Bipolar Operation

External resistors may be used to achieve alternate zero and full-scale voltages. It is advantageous to utilize R21 and R22 even in these applications since they are closely matched in TCR and temperature to the internal array. Figure 3 illustrates the recommended circuit for zero to 5V operation. R_{EXT} should be of metal film or wire-wound construction with a TCR of less than 10ppm/°C.

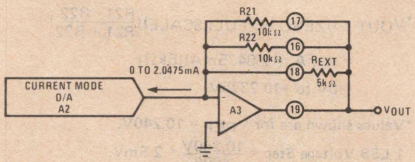

$$R_{TOTAL} = (R21) \parallel (R22) \parallel (R_{EXT}) = \frac{V_{FULLSCALE}}{2.0475\text{mA}} = 2.5\text{k}\Omega.$$

FIGURE 3. DAC1200 0 to 5.120V Operation

4. Offset and Full-Scale Adjust

If higher precision is required in the zero and full-scale, external adjustments may be made. The circuit of figure 4 illustrates the recommended circuit to adjust offset and full-scale of the DAC1200 series. The circuit will work equally well for unipolar or bipolar operation.

In bipolar operation, the offset is adjusted at minus full-scale; in the unipolar case at zero scale.

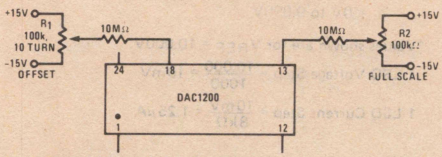

FIGURE 4. Offset & Full-Scale Adjust

For the values shown in figure 4, R1 will allow a ±7mV offset adjustment for the unipolar case and ±15mV for the bipolar case. R2 will allow a ±50mV adjustment of full scale.

5. Current Mode Operation

Access to the summing junction of A3 affords current mode operation either with a resistive load or to drive a fast-settling external operational amplifier. The loop around A3 should not be closed in current mode operation. There is a ±2.5V maximum compliance voltage at A2's output (pin 18) which restricts the maximum size of the load resistor; i.e., $R_L \times I_{FULLSCALE} \leqslant 2.5\text{V}$.

Note: $I_{FULLSCALE} \approx 2$ mA for DAC1200/DAC1201 and ≈ 1.25 mA for DAC1202/DAC1203.

6. Settling Time & Glitch Minimization

The settling time of the DAC1200 series and the glitch which occurs between major input code changes may be improved by placing a 10 to 30pF capacitor between pins 18 (current-mode output) and 19 (voltage mode output). The capacitor is used to cancel output capacitance of the current mode D/A and stray capacitance at pin 18.

7. Current Output Boosting

The DAC1200 series may be operated as a "power D/A" by including a current buffer such as the LH0002 or LH0063 in the loop with A3 as shown in figure 5.

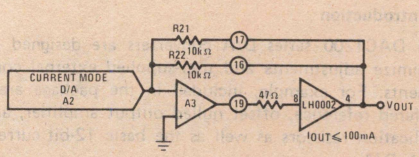

FIGURE 5. Current Boosted Output

8. Logic Input Coding

The sense of the logic inputs to the DAC1200 series is complementary; i.e., a given bit is turned ON by an active "low" input. Table I summarizes input status for the unipolar and bipolar complementary binary and BCD codes.

Other input codes may also be used. For example, the twos complement code, which is used extensively in computer and microprocessor applications, may be converted to the DAC1200 complementary bipolar format by inverting all bits except the MSB. The inversion may be accomplished in the microprocessor by software control, or by hardware using standard hex-inverters.

9. Reference Voltage

External reference voltages may be used with the DAC1200 series. Voltages other than 10.240 or 10.000V in the range of +5.0V to 11V will work satisfactorily for voltage mode operation. Full-scale voltage is always V_{REF} − 1 LSB where 1 LSB = $V_{REF}/4096$ (binary) or $V_{REF}/1000$ (BCD). Full-scale current (for binary) may be predicted by:

$$I_{FULLSCALE} = (V_{REF})(0.19995117)\text{mA}$$

CODE TYPE	(Note 8) INPUT CODE MSB LSB	OUTPUT STATE	OUTPUT VOLTAGE (Note 9)	OUTPUT CURRENT
Unipolar Complementary Binary	0000 0000 0000	Full-Scale	+10.2375V	2.0475mA
	1111 1111 1110	1 LSB ON	+2.500mV	0.500μA
	1111 1111 1111	Zero Scale	Zero	Zero
Bipolar Complementary Binary	0000 0000 0000	Full-Scale	+10.235V	+1.0235mA
	0111 1111 1111	Half Full-Scale	-0.000V	0.000mA
	1111 1111 1110	1 LSB ON	-10.235V	-1.0235mA
	1111 1111 1111	Zero Scale	-10.240V	-1.0240mA
Unipolar Complementary BCD	0110 0110 0110	Full-Scale	+9.990V	1.24875mA
	1111 1111 1110	1 LSB ON	10.000mV	1.250μA
	1111 1111 1111	Zero Scale	Zero	Zero
Bipolar Complementary BCD	0110 0110 0110	Full-Scale	9.980V	+0.62375mA
	1010 1111 1111	Half Full-Scale	0.000V	Zero
	1111 1111 1110	1 LSB ON	-9.980V	-0.62375mA
	1111 1111 1111	Zero Scale	-10.00V	-0.625mA

Note 8: Logic input sense is such that an active low ($V_{IN} \leq 0.8V$) turns a given bit ON and is represented as a logic "0" in the table.

Note 9: V_{REF} = 10.240V for the DAC1200/1201 and 10.000V for the DAC1202/1203.

Definition of Terms

Resolution

Resolution is defined as the reciprocal of the number of discrete steps in the D/A output (as designed). It is directly related to the number of switches or bits within the D/A. For example, the DAC1200 has 2^{12} or 4096 steps. Resolution may therefore be expressed variously as 12 bits, as 1 part in 2^{12}, as 1 part in 4096, or as a percentage (1/4096 x 100 = 0.0244%). The DAC1202 has 1000 steps and 3 BCD digits. Resolution may be expressed as 0.1% or 3 BCD digits.

Linearity Error

Linearity error is the maximum deviation from a straight line passing through the endpoints of the D/A transfer characteristic. It is measured after calibrating for zero and full-scale. The linearity error of the DAC1200 series is guaranteed to be less than ±½ LSB or 0.0122% of F.S. for the DAC1200/1200C and ±0.0488% of F.S. for the DAC1201/DAC1201C. Linearity error is a design parameter intrinsic to the device and cannot be externally adjusted.

Offset Voltage

Offset voltage is an output voltage other than zero volts for unipolar operation (and other than minus full-scale for bipolar operation) with all bits turned OFF. In the DAC1200 series this error resides primarily in the output amplifier, A3. Offset voltage is adjustable to zero as discussed in the applications section.

Power Supply Sensitivity

Power supply sensitivity is a measure of the effect of power supply changes on the D/A full-scale output.

Settling Time

Two settling time parameters are specified for the DAC1200 series. Full-scale settling time requires a zero to full-scale or full-scale to zero output change. One LSB settling time requires one LSB output change. In both instances, settling time is the time required from a code transition until the D/A output reaches within ±½ LSB of final output value.

Monotonicity

Monotonicity is a characteristic of the D/A which requires a non-negative output step for an increasing input digital code. Monotonicity, therefore, demands no back steps or changes in sign of the slope of the D/A transfer characteristic.

Full-Scale Error

Full-scale error is a measure of the output error between an ideal D/A and the actual device output. Ideally, for the DAC1200 full-scale is V_{REF} − 1 LSB. For V_{REF} = 10.240V and unipolar operation, $V_{FULLSCALE}$ = 10.240V − 2.5mV = 10.2375V. Departures from this value include internal gain, scaling, and reference errors. Full-scale error is adjustable to zero as discussed in the **Applications** section.

Typical Application

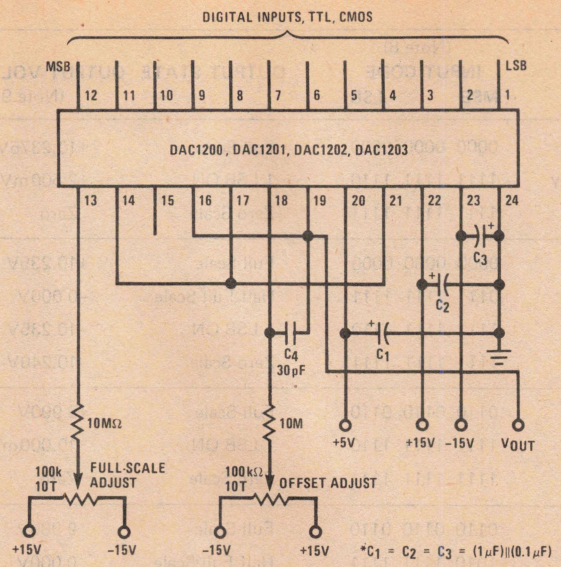

20 Volt Full-Scale Complementary D/A

DC Test Circuit

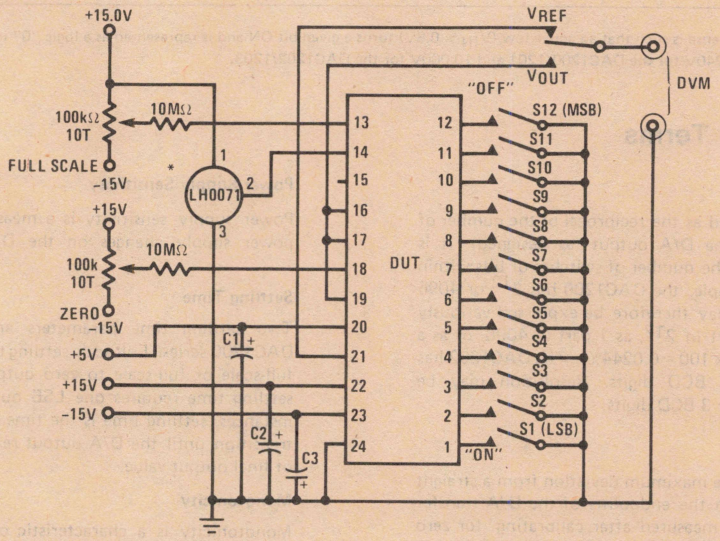

*LH0070 for DAC1202/1203

C1 = C2 = C3 = 4.7μF (solid tantalum) in parallel with a 0.01μF ceramic disc

National Semiconductor

D/A Converter Products

DAC1280, DAC1285 12-Bit (Binary), DAC1286, DAC1287 3-Digit (BCD) Digital-to-Analog Converters

General Description

The DAC1280 series is a family of precision, low cost, fully self-contained digital-to-analog converters. The devices include 12 precision current switches, a 12-bit thin film resistor network, output amplifier, buffered internal reference, and several precision resistors, which allow the user to tailor his system needs to accommodate a variety of bipolar and unipolar output voltage and current ranges. Logic inputs are TTL, DTL and CMOS compatible, and are available in complementary binary (CBI) and complementary BCD (CCD) coding formats. In all instances, a logic low ($\leq$ 0.8V) turns a given bit ON, and a logic high ($\geq$ 2V) turns a given bit OFF. Internally supplied resistor options provide low drift bipolar output voltage ranges of ±2.5V, ±5V, ±10V, and unipolar ranges of 0 to 5V or 0 to 10V. Current mode output is also available 0 to 2 mA (binary models) and 1.25 mA (BCD models).

The entire series is available in a rugged side-brazed ceramic 24-lead DIP.

Features

- Completely self-contained with no external components required
- ±1/2 LSB linearity
- Standard power supplies: ±15V, 5V
- TTL, DTL, CMOS compatible binary or BCD
- ±2.5V, ±5V, ±10V, 0 to 5V, 0 to 10V voltage outputs
- 0 to 2 mA, 0 to 1.25 mA current output
- Internal reference
- Fast settling time: 300 ns current mode, 2.5 μs voltage mode
- Pin compatible with DAC80 and DAC85 series
- Full military temperature range operation

Block Diagram

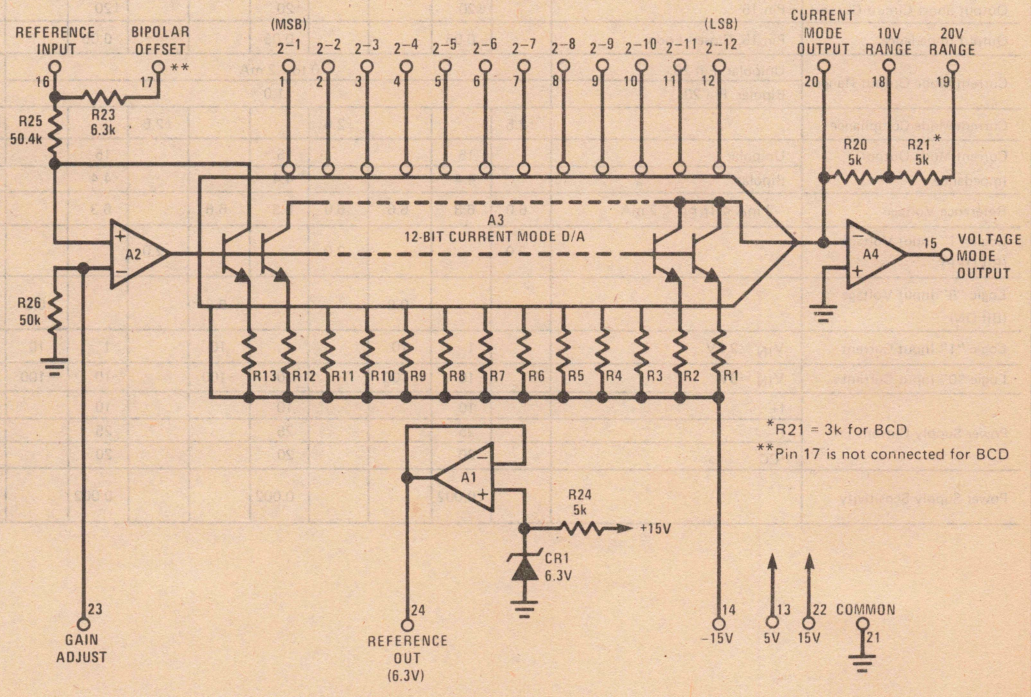

Absolute Maximum Ratings

Supply Voltage (V+ and V−)	±18V
Logic Supply Voltage (V_{CC})	10V
Logic Input Voltage	−0.7V, 18V
Reference Input Voltage (V_{REF})	0V, 18V
Power Dissipation	(See graph)
Short-Circuit Duration (Pins 15, 20 and 24)	Continuous
Operating Temperature Range	
DAC1285HD, DAC1286HD	−55°C to +125°C
DAC1285HCD, DAC1286HCD, DAC1280HCD, DAC1287HCD	−25°C to +85°C
Storage Temperature Range	−65°C to +150°C
Lead Temperature (Soldering, 10 seconds)	300°C

DC Electrical Characteristics DAC1285H, DAC1285HC, DAC1280HC Binary D/A (Notes 1 and 2)

PARAMETER	CONDITIONS	DAC1285HD			DAC1285HCD			DAC1280HCD			UNITS
		MIN	TYP	MAX	MIN	TYP	MAX	MIN	TYP	MAX	
Resolution		12			12			12			Bits
Linearity Error	$T_A = 25°C$			±1/2			±1/2			±1	LSB
	$T_{MIN} \leq T_A \leq T_{MAX}$, (Note 3)			±1/2			±1/2			±2	LSB
Differential Non-Linearity			±1/2			±1/2			±1/2		LSB
Zero-Scale Error (Offset)	(Notes 4 and 5)		±0.05			±0.05			±0.05		% FSR
Zero-Scale Drift (Offset Drift)	Unipolar, $T_{MIN} \leq T_A \leq T_{MAX}$		±1			±1			±1		ppm of FSR/°C
	Bipolar, $T_{MIN} \leq T_A \leq T_{MAX}$		±3	±10		±3	±15		±10		ppm of FSR/°C
Full-Scale Error (Gain Error)	(Note 5)		±0.1			±0.1			±0.1		% of FSR
Full-Scale Drift (Gain Drift)	$T_{MIN} \leq T_A \leq T_{MAX}$			±20			±30		±10		ppm/°C
Output Voltage Range	Using Internally Supplied Resistors	±2.5, ±5.0, ±10, 0 to +5, 0 to +10									V
Output Voltage Swing	$R_L \geq 5\ k\Omega$, Pin 15	±10	±12		±10	±12		±10	±12		V
Output Short-Circuit Current	Pin 15		±20			±20			±20		mA
Output Impedance	Pin 15, Closed Loop		0.05			0.05			0.05		Ω
Current Mode Output Range	Unipolar, Pin 20	0 to −2 mA									mA
	Bipolar, Pin 20	±1.0									mA
Current Mode Compliance		±2.5			±2.5			±2.5			V
Current Mode Output Impedance	Unipolar		15			15			15		kΩ
	Bipolar		4.4			4.4			4.4		kΩ
Reference Voltage	$-2\ mA \leq I_{REF} \leq 2\ mA$	6.0	6.3	6.6	6.0	6.3	6.6		6.3		V
Logic "1" Input Voltage (Bit OFF)		2.0			2.0			2.0			V
Logic "0" Input Voltage (Bit ON)				0.8			0.8			0.8	V
Logic "1" Input Current	$V_{IN} = 2.5V$		1	10		1	10		1	10	μA
Logic "0" Input Current	$V_{IN} = 0V$		−10	−100		−10	−100		−10	−100	μA
Power Supply Current	I+		10			10			10		mA
	I−		25			25			25		mA
	I_{CC}		20			20			20		mA
Power Supply Sensitivity			0.002			0.002			0.002		% of FSR/%V

DC Electrical Characteristics DAC1286H, DAC1286HC, DAC1287HC BCD D/A (Notes 1 and 2)

PARAMETER	CONDITIONS	DAC1286HD			DAC1286HCD			DAC1287HCD			UNITS
		MIN	TYP	MAX	MIN	TYP	MAX	MIN	TYP	MAX	
Resolution		3			3			3			Digits
Linearity Error	$T_A = 25°C$			±1/2			±1/2			±1	LSB
	$T_{MIN} \leq T_A \leq T_{MAX}$, (Note 3)			±1/2			±1/2			±1	LSB
Differential Non-Linearity			±1/2			±1/2			±1/2		LSB
Zero-Scale Error (Offset Error)	(Notes 4 and 5)		±0.05			±0.05			±0.05		% FSR
Zero-Scale Drift (Offset Drift)	Unipolar, $T_{MIN} \leq T_A \leq T_{MAX}$		±1			±1			±1		ppm of FSR/°C
Full-Scale Error (Gain Error)	(Note 5)		±0.1			±0.1			±0.1		% of FSR
Full-Scale Drift (Gain Drift)	$T_{MIN} \leq T_A \leq T_{MAX}$			±20			±30		±10		ppm/°C
Output Voltage Range	Using Internally Supplied Resistors	0 to +10									V
Output Voltage Swing	$R_L \geq 5\ k\Omega$	±10	±12		±10	±12		±10	±12		V
Output Short-Circuit Current			±20			±20			±20		mA
Output Impedance	Pin 15, Closed Loop		0.05			0.05			0.05		Ω
Current Mode Output Range	Unipolar, Pin 20	0 to −1.25									mA
Current Mode Compliance		±2.5			±2.5			±2.5			V
Current Mode Output Impedance			15			15			15		kΩ
Reference Voltage	$-2\ mA \leq I_{REF} \leq 2\ mA$	6.0	6.3	6.6	6.0	6.3	6.6		6.3		V
Logic "1" Input Voltage (Bit OFF)		2.0			2.0			2.0			V
Logic "0" Input Voltage (Bit ON)				0.8			0.8			0.8	V
Logic "1" Input Current	$V_{IN} = 2.5V$		1	10		1	10		1	10	μA
Logic "0" Input Current	$V_{IN} = 0V$		−10	−100		−10	−100		−10	−100	μA
Power Supply Current	I+		10			10			10		mA
	I−		25			25			25		mA
	I_{CC}		20			20			20		mA
Power Supply Sensitivity			0.002			0.002			0.002		% of FSR/%V

Note 1: Unless otherwise specified, these specifications apply for $V^+ = 15V$, $V^- = -15V$ and $V_{CC} = 5V$ over the entire temperature range −55°C to +125°C for DAC1285HD and DAC1286HD, and −25°C to +85°C for DAC1285HCD, DAC1280HCD, DAC1286HCD and DAC1287HCD. For specified operation, the internal reference (pin 24) must be connected to the reference input (pin 16). The specifications are guaranteed after 30 seconds of warm-up after power turn-on.

Note 2: All typical values are for $T_A = 25°C$.

Note 3: These specifications apply to the limited temperature range $T_{MIN} = -25°C$ to $T_{MAX} = +85°C$ for DAC1285HD and DAC1286HD, and $T_{MIN} = 0°C$ to $T_{MAX} = +70°C$ for DAC1285HCD, DAC1280HCD, DAC1286HCD and DAC1287HCD. For the entire temperature range, double the above specifications.

Note 4: FSR means "full-scale range" and is 20V for ±10V range, 10V for ±5V, etc.

Note 5: Externally adjustable to zero.

AC Electrical Characteristics $T_A = 25°C$, (Note 6)

PARAMETER	CONDITIONS	MIN	TYP	MAX	UNITS
Voltage Mode ±1 LSB Settling Time					
DAC1285, DAC1286	$V_E \leq 1\ mV$		1.5	3.0	μs
DAC1280C	$V_E \leq 5\ mV$		1.5	3.0	μs
Voltage Mode Full-Scale Settling Time	$V_E \leq 1\ mV$		2.5	5.0	μs
Current Mode Full-Scale Settling Time	$R_L = 100\Omega$		300		ns
Voltage Mode Slew Rate	$-10V \leq V_{OUT} \leq +10V$		20		V/μs

Note 6: Not tested, guaranteed by design.

Connection Diagram

Dual-In-Line Package

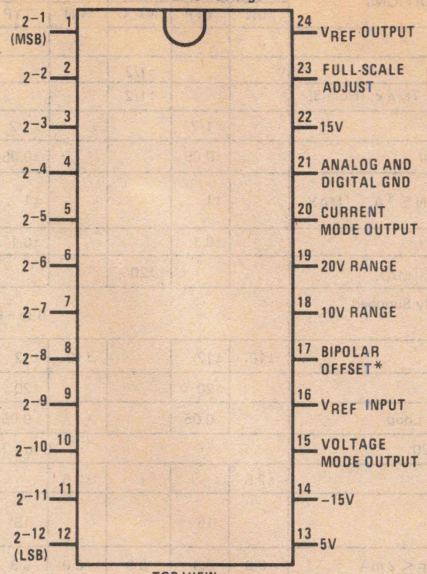

TOP VIEW

*NC in BCD models

See Package D24D

Typical Performance Characteristics

Maximum Power Dissipation

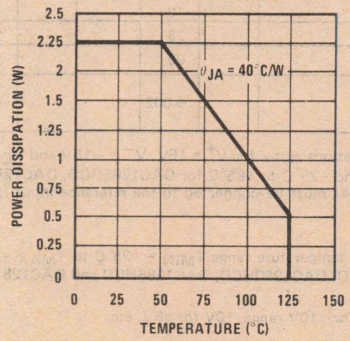

Functional Description

The DAC1280 series is a sophisticated D/A building block. The user is encouraged to read the following applications information before applying power to the device. Refer to National Semiconductor Application Notes AN-156 and AN-159 for additional applications information.

Selection of power supplies is important in applications requiring 0.01% accuracy. The ±15V supplies should be well regulated (±15V ±0.1% with less than 0.5 mVrms of output noise and ripple.

To realize full speed capability of the device, all 3 power supply leads should be bypassed no further than 1/2 inch from the device, with 1 μF tantalum electrolytic capacitors in parallel with 0.01 μF ceramic disc capacitors.

VOLTAGE MODE OPERATION

The DAC1280, DAC1285 binary and DAC1286, DAC1287 BCD D/A's provide internal scaling resistors which permit a wide range of bipolar and unipolar output configurations. Bipolar output formats of ±2.5V, ±5V, ±10V and unipolar formats of 0 to 5V and 0 to 10V are possible using resistor strap options included within the device. Table I and *Figures 1–4* summarize the proper pin connections required for these formats.

Functional Description (Continued)

TABLE I. Output Voltage/Current Ranges for DAC1280 Series

OUTPUT VOLTAGE RANGE	DIGITAL INPUT CODE	CONNECT PIN 15 TO	CONNECT PIN 16 TO	CONNECT PIN 17 TO	CONNECT PIN 19 TO
±10V	Complementary Offset Binary	19	24	20	15
±5V	Complementary Offset Binary	18	24	20	NC
±2.5V	Complementary Offset Binary	18	24	20	20
+10V	Complementary Binary	18	24	21*	NC
+5V	Complementary Binary	18	24	21*	20
±1 mA	Complementary Offset Binary	NC	24	20	NC
−2 mA	Complementary Binary	NC	24	21*	NC
+10V	Complementary BCD	19	24	NC	15
−1.25 mA	Complementary BCD	NC	24	NC	NC

*Optional, no connection necessary

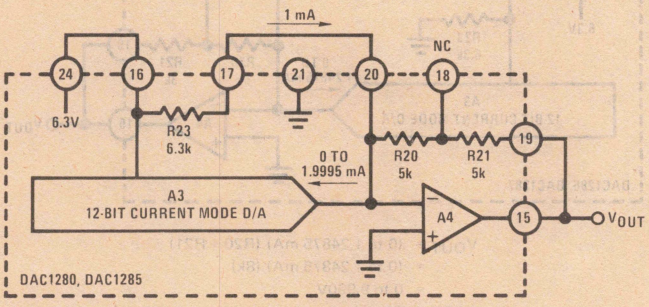

$$V_{OUT} = (0 \text{ to } 1.9995 \text{ mA})(R20 + R21) - (6.3V/R23)(R21 + R22)$$
$$= (0 \text{ to } 1.9995 \text{ mA})(10k) - (1 \text{ mA})(10k)$$
$$= -10V \text{ to } +9.995V$$
$$1 \text{ LSB} = 20V/4096 = 4.88 \text{ mV}$$

FIGURE 1. ±10V Bipolar Operation

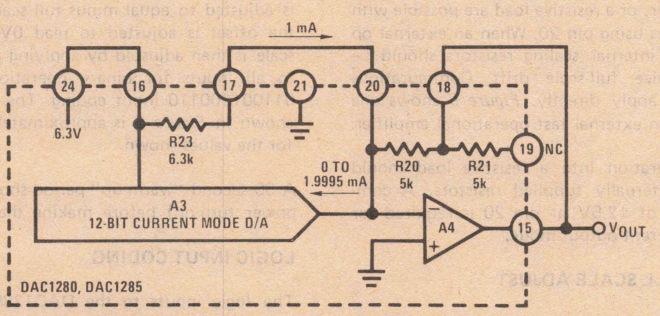

$$V_{OUT} = (0 \text{ to } 1.9995 \text{ mA})(R20) - (R20/R23)(6.3V)$$
$$= (0 \text{ to } 1.9995 \text{ mA})(5k) - (5k/6.3k)(6.3V)$$
$$= -5V \text{ to } 4.9975V$$
$$1 \text{ LSB} = 10V/4096 = 2.44 \text{ mV}$$

FIGURE 2. ±5V Bipolar Operation

Functional Description (Continued)

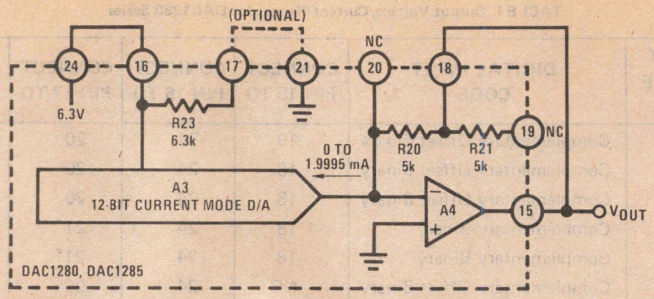

V_{OUT} = (0 to 1.9995 mA) (R20)
= (0 to 1.9995 mA) (5k)
= 0 to 9.9976V
1 LSB = 2.44 mV

FIGURE 3. 10V Unipolar Operation

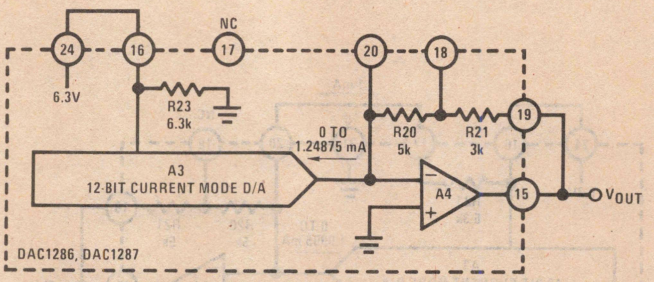

V_{OUT} = (0 to 1.24875 mA) (R20 + R21)
= (0 to 1.24875 mA) (8k)
= 0 to 9.990V
1 LSB = 10 mV

FIGURE 4. 10V BCD Operation

CURRENT MODE OPERATION

Current mode applications which make use of an external op amp, comparator, or a resistive load are possible with the DAC1280 series using pin 20. When an external op amp is used, the internal scaling resistors should be utilized to minimize full-scale drift. Configurations shown in Table I apply directly. *Figure 5* shows one application using an external fast operational amplifier.

Current mode operation into a resistive load should also utilize the internally supplied resistors. A compliance restriction of ±2.5V at pin 20 is required for operation in the current output mode.

OFFSET AND FULL-SCALE ADJUST

The DAC1280 series may be offset and full-scale adjusted using the circuit shown in *Figure 6*. Offset voltage should be adjusted first. A logic "1" ($\geq$ 2V) should be applied to all logic inputs. In bipolar mode, the offset is adjusted to equal minus full-scale. In unipolar mode, the offset is adjusted to read 0V at the output. Full-scale is then adjusted by applying a logic "0" ($\leq$ 0.8V) to all inputs for binary operation. For BCD, apply 011001100110 input coding. The range of R1 and R2 shown in *Figure 6* is approximately ±0.2% of full-scale for the values shown.

A 30 second "warm-up" period should be allowed (after power turn-on) before making the above adjustments.

LOGIC INPUT CODING

The logic inputs to the DAC1280 series are complementary; i.e., a given bit is turned ON by an active low input. Table II summarizes input status for unipolar and bipolar codes.

Functional Description (Continued)

REFERENCE SUPPLY

The DAC1280 series is supplied with an internal 6.3V reference supply voltage (pin 24). In order to obtain the specified performance, pin 24 should be connected to the Reference Voltage Input (pin 16). Since the reference is buffered by an op amp, the reference may be used externally at currents up to 5 mA. The reference output is short-circuit limited to a nominal 20 mA. An external reference voltage may be used with the DAC1280 series. Voltage values between 5V and 11V will work satisfactorily. Full-scale current may be predicted by:

$$I_{FULL\text{-}SCALE} = (V_{REF})\,(0.317381\ \text{mA/V})$$

LOGIC INPUT COMPATIBILITY

The design of the current mode switches in the DAC1280 series give the device true TTL compatibility. It is TTL compatible over the entire operating temperature range and is independent of the reference voltage and V_{CC}. Furthermore, since the input breakdown ratings are in excess of 18V, the DAC1280 series may be driven directly from high (or low) voltage CMOS.

TABLE II

CODE TYPE	INPUT CODE (Note 7) MSB											LSB	OUTPUT STATE	UNIPOLAR OUTPUT RANGES 0 to 10V	0 to 5V	0–2 mA 0–1.25 mA
Unipolar	0	0	0	0	0	0	0	0	0	0	0	0	Full-Scale	9.9976V	4.9988V	−1.9995 mA
Complementary	1	1	1	1	1	1	1	1	1	1	1	0	1 LSB ON	0.0024V	0.0012V	0.0005 mA
Binary	1	1	1	1	1	1	1	1	1	1	1	1	Zero-Scale	0.0000V	0.0000V	0.0000 mA
Unipolar	0	1	1	0	0	1	1	0	0	1	1	0	Full-Scale	9.990V		1.2488 mA
Complementary	1	1	1	1	1	1	1	1	1	1	1	0	1 LSB ON	0.010V		0.00125 mA
BCD	1	1	1	1	1	1	1	1	1	1	1	1	Zero-Scale	0.000V		0.0000 mA

CODE TYPE	INPUT CODE (Note 7) MSB											LSB	OUTPUT STATE	BIPOLAR OUTPUT VOLTAGE RANGES ±10V	±5V	±2.5V	±1 mA
Bipolar	0	0	0	0	0	0	0	0	0	0	0	0	Full-Scale	9.9951V	4.9976V	2.4988V	−0.9995 mA
Complementary	0	1	1	1	1	1	1	1	1	1	1	1	Half-Scale	0.0000V	0.0000V	0.0000V	0.0000 mA
Binary	1	1	1	1	1	1	1	1	1	1	1	0	1 LSB ON	−9.9951V	−4.9976V	−2.4988V	0.9995 mA
	1	1	1	1	1	1	1	1	1	1	1	1	Zero-Scale	−10.0000V	−5.0000V	−2.5000V	1.0000 mA

Note 7: Logic input sense is such that an active low ($V_{IN} \leq 0.8V$) turns a given bit ON and is represented as a logic "0" in the table.

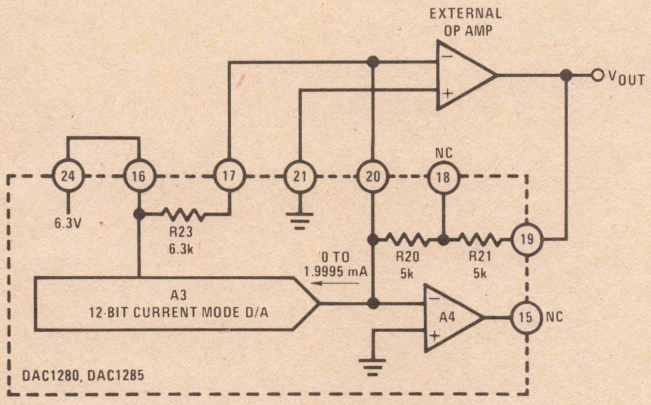

FIGURE 5. ±10V Bipolar Operation with External Operational Amplifier

Functional Description (Continued)

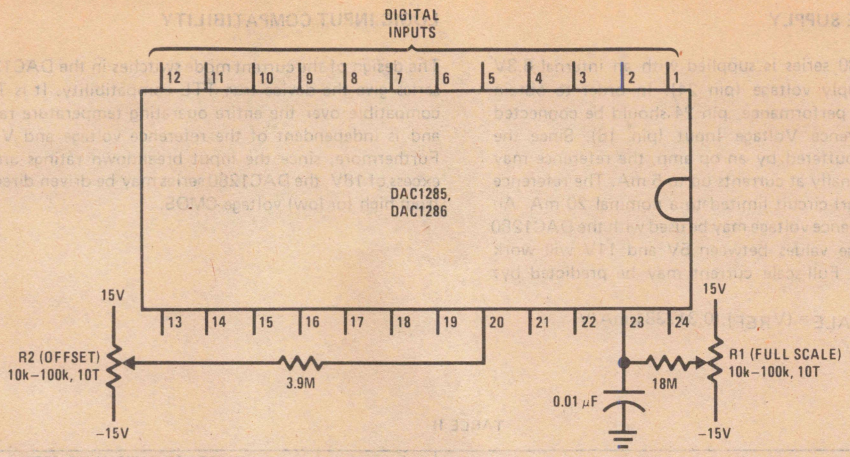

FIGURE 6. Full-Scale and Adjustment Circuits

Ordering Information

PART NUMBER		25°C LINEARITY	PACKAGE	TEMPERATURE RANGE
BINARY	BCD			
DAC1285HD	DAC1286HD	0.01%	D24D	−55°C to +125°C
DAC1285HCD	DAC1286HCD	0.01%	D24D	−25°C to +85°C
DAC1280HCD	DAC1287HCD	0.025%	D24D	−25°C to +85°C

Section 13

Data Acquisition Cards

13

ADS1216HC 16-Channel, 12-Bit Data Acquisition System with Memory

General Description

The ADS1216HC is a complete 16-channel (differential 8-channel) data acquisition system with 12-bit linearity and resolution. It features on-card memory and micro or mini-computer TTL bus driving capability. The system contains a 16-channel or differential 8-channel multiplexer; programmable gain amplifier with program memory loaded by software; sample-and-hold amplifier; 12-bit analog-to-digital converter, TRI-STATE® TTL bus drivers; and all timing, control, and interface circuits necessary for interfacing any micro or mini-computer. The system operates in a continuous, asynchronous, sequential scanning mode, updating the self-contained RAM upon completion of each data conversion. In this way, latest data for all channels is always resident in RAM. The system is memory-mapped so it appears to the computer exactly like main memory. The interface presents selected channel data to the data bus within 220 ns after data is requested; therefore data is accessible at main memory access speed. The system will operate with any of the popular computer systems by selection of appropriate off-card strap connections.

Features

- 16 single-ended, 16 quasi-differential, or 8 differential channels
- 12-bit resolution and linearity
- 220 ns data access time
- 16 channels of on-card memory
- Memory-mapped interface
- On-card precision gain-set network for gains of 1, 2, 2 1/2, 5, 10, 20, 50, 100
- Full-scale ranges 0–100 mV to ±10V including 1–5V
- Gain program memory provides any of 4 selected gains at any of 16 channels
- Internal precision reference divider for calibration at 0.1, 1, 5, 10V
- Internal 10.24V reference
- Drives fully loaded TTL data bus
- Continuous sequential channel scanning
- Supplied with mating card-edge connectors
- Operates with all TTL compatible 8-bit or 16-bit processors

Functional Block Diagram

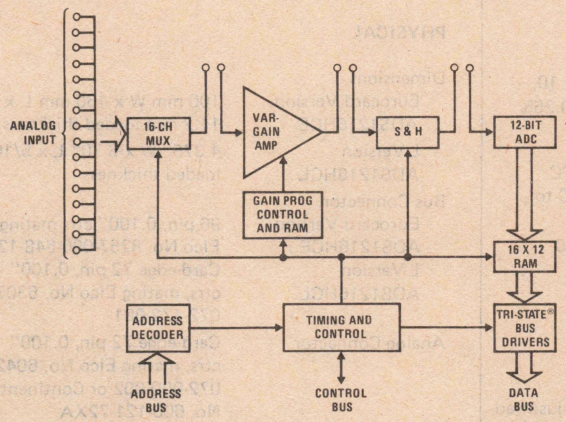

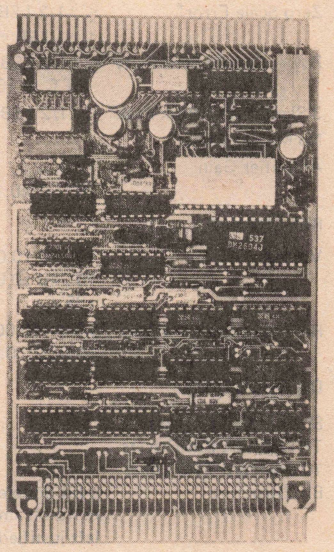

Preliminary Specifications

ANALOG INPUTS

Data Channels	16 single-ended, 16 pseudo-differential, or 8 differential
Full Scale Range	±10.24V, 0–10.24V ±5.12V, 0–5.12V, 1–5.096V ±4.096V, 0–4.096V ±2.048V, 0–2.048V ±1.024V, 0–1.024V ±512 mV, 0–512 mV ±205 mV, 0–205 mV ±102 mV, 0–102 mV
Absolute Maximum, V_{IN}	±15V
Input Leakage Current	≤ 10 nA @ 25°C ≤ 60 nA −25°C to +85°C
Input Bias Current of S&H Amplifier	25 nA @ 25°C 75 nA −25°C to +85°C
Input Capacitance	≤ 100 pF for ON channel ≤ 10 pF for OFF channel
Input Channel MUX Switches	ON for Power OFF

SIGNAL DYNAMICS

Throughput Rate	8000 ch/sec (scans each of 16 channels every 2 ms)
S & H Feedthrough	≤ −80 dB @ 1 kHz
Crosstalk, OFF to ON Channel	≤ −80 dB @ 1 kHz
Differential Amp CMRR	≥ 60 dB @ f = 0–1 kHz, Gain = 1–100

ACCURACY

Resolution	12 bits
Quantizing Error	±1/2 LSB
Linearity Error	≤ ±1/2 LSB 25°C ≤ ±1 LSB −25°C to +85°C
Full Scale Error*	≤ ±1/2 LSB 25°C ≤ ±1 LSB −25°C to +85°C
Zero Scale Error*	≤ ±1/2 LSB 25°C ≤ ±1 LSB −25°C to +85°C
Power Supply Sensitivity*	≤ ±1/2 LSB, V_S = 14–16V, −25°C to +85°C
3 Sigma Noise Peak-Peak*	≤ ±1/2 LSB, 0–3 kHz
No Missing Codes*	
Amplifier Gain	1, 2, 2.5, 5 ±0.05%; 10, 20, 50 ±0.1%, 100 ±0.25%

REFERENCE

Voltage	10.240 ±0.015V @ 25°C 10.240 ±0.020V −25°C to +85°C
Reference Divider Ratio	10.24:10.00, 5.00, 1.00 ±0.05%; 0.100 ±0.1%

DATA OUTPUT

Standard TTL Levels
TRI-STATE Bus Drivers
10 Standard TTL Loads

Bus Structure	8-bit double byte right-justified or 16-bit single byte right or left-justified data.
Coding	Natural binary Offset binary 2's complement binary
Data Access Time	220 ns after address and read signals

ADDRESS INPUT

Standard TTL Levels	BA0, 2 low power TTL loads BA1–BA4, 1 low power TTL load BA5–BA16, high impedance with 0.65V hysteresis
Channel Select	4-bit channel select, 12-bit card select, or 4-bit channel select, 1-bit byte select, 11-bit card select

CONTROL BUS

Standard TTL Levels
Logic '1" or Logic "0", True (Strap Select)

Address Enable Strobe	3 standard TTL loads
Memory Select Strobe	1 low power Schottky TTL load
Memory Read Strobe	1 low power Schottky TTL load
Memory Write Strobe	1 low power Schottky TTL load
Memory Ready Signal	Will drive 10 standard TTL loads
NINIT	2 standard TTL loads

POWER REQUIREMENTS

±15V	25 mA
5V	600 mA

PHYSICAL

Dimensions	
Eurocard Version ADS1216HCE	100 mm W x 160 mm L x 11.2 mm loaded thickness
L Version ADS1216HCL	4.375" W x 6.70" L x 5/16" loaded thickness
Bus Connector	
Eurocard Version ADS1216HCE	96 pin, 0.100" ctrs mating Elco No. 8257-096-648-123
L Version ADS1216HCL	Card-edge 72 pin, 0.100" ctrs, mating Elco No. 6307-072-472-001
Analog Connector	Card-edge 72 pin, 0.100" ctrs, mating Elco No. 6042-072-000-002 or Continental No. 600-121-72XA

*Amplifier gain = 1

Block Diagram

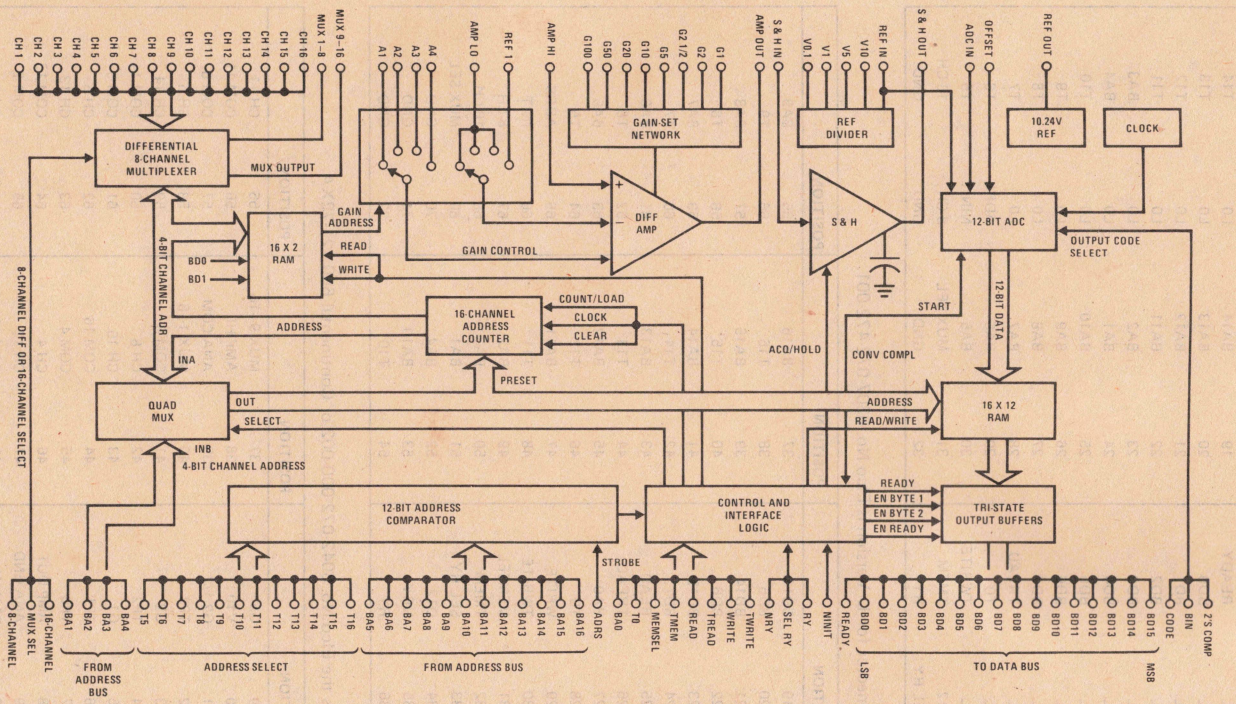

Timing Diagrams

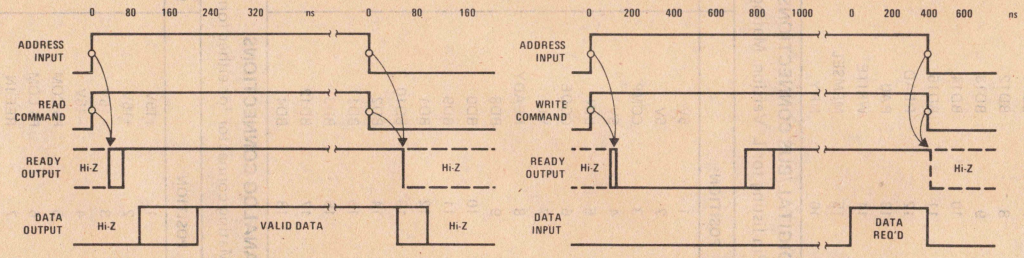

Read Cycle

Write Gain Program

Important Note. Always load gain program after power-up and before beginning data acquisition operation.

Connection Tables

DIGITAL/BUS CONNECTIONS

Pin listing for Eurocard Version. Mating connector for Eurocard Version is Elco No. 8257-096-648-123.

POSITION	ROW A	ROW B	ROW C	POSITION	ROW A	ROW B	ROW C
1	5V	5V	5V	17	BA16	L0	T16
2	BIN	CODE	COMP	18	BA15	L0	T15
3	VL	VL	READY	19	BA14	L0	T14
4	BD8	VL	BD0	20	BA13	L0	T13
5	BD9	VL	BD1	21	BA12	L0	T12
6	BD10	VL	BD2	22	BA11	L0	T11
7	BD11	VL	BD3	23	BA2	L0	BA3
8	BD12	VL	BD4	24	BA1	L0	BA4
9	BD13	VL	BD5	25	BA10	L0	T10
10	BD14	VL	BD6	26	BA9	L0	T9
11	BD15	VL	BD7	27	BA8	L0	T8
12	READ	VL	TREAD	28	BA7	L0	T7
13	BA0	VL	T0	29	BA6	ADRS	T6
14	WRITE	VL	TWRITE	30	BA5	NINIT	T5
15	MEMSEL	D12	TMEM	31	MUX SEL	8-CH	16-CH
16	NRY	SEL RY	RY	32	GND	GND	GND

DIGITAL/BUS CONNECTIONS

Pin listing for L Version. Mating connector for L Version is Elco No. 6307-072-472-001.

POSITION		POSITION		POSITION		POSITION	
1	5V	19	BD13	37	BA16	55	BA9
2	5V	20	BD5	38	T16	56	T9
3	COMP	21	BD14	39	BA15	57	BA8
4	5V	22	BD6	40	T15	58	T8
5	BIN	23	BD15	41	BA14	59	BA7
6	CODE	24	BD7	42	T14	60	T7
7	VL	25	READ	43	BA13	61	BA6
8	READY	26	TREAD	44	T13	62	T6
9	BD8	27	BA0	45	BA12	63	BA5
10	BD0	28	T0	46	T12	64	T5
11	BD9	29	WRITE	47	BA11	65	ADRS
12	BD1	30	TWRITE	48	T11	66	INIT
13	BD10	31	MEMSEL	49	BA2	67	8-CH
14	BD2	32	TMEM	50	BA3	68	16-CH
15	BD11	33	SEL RY	51	BA1	69	MUX SEL
16	BD3	34	D12	52	BA4	70	GND
17	BD12	35	NRY	53	BA10	71	GND
18	BD4	36	RY	54	T10	72	GND

ANALOG CONNECTIONS

Mating connector for either format is the Elco No. 6042-072-000-002 or Continental 600-121-72XA.

POSITION		POSITION		POSITION		POSITION	
1	+15V	19	G5	37	MUX 9–16	55	CH 11
2	+15V	20	V10	38	AMP HI	56	COM 11
3	−15V	21	G2 1/2	39	ANA COM	57	COM 6
4	−15V	22	TP3	40	MUX 1–8	58	CH 6
5	PS COM	23	G2	41	COM 8	59	CH 14
6	PS COM	24	TP2	42	CH 8	60	COM 14
7	REF IN	25	G1	43	CH 16	61	COM 5
8	ADC IN	26	TP1	44	COM 16	62	CH 5
9	REF OUT	27	TP0	45	COM 4	63	CH 13
10	OFFSET	28	AMP OUT	46	CH 4	64	COM 13
11	G100	29	ANA GND	47	CH 12	65	COM 2
12	S&H OUT	30	S&H IN	48	COM 12	66	CH 2
13	G50	31	A3	49	COM 7	67	CH 10
14	V0. 1	32	A4	50	CH 7	68	COM 10
15	G20	33	A1	51	CH 15	69	COM 1
16	V1	34	A2	52	COM 15	70	CH 1
17	G10	35	AMP LO	53	COM 3	71	CH 9
18	V5	36	REF 1	54	CH 3	72	COM 9

Applications Information

ANALOG INPUTS

Sixteen pairs of input terminals are provided. Those marked CH 1 to CH 8 are multiplexed by an 8-channel multiplexer to MUX 1–8. Those marked CH 9 to CH 16 are multiplexed by another 8-channel multiplexer to MUX 9–16. Sixteen additional terminals, marked COM 1 to COM 16 are not multiplexed, but are connected to ANA COM. These are normally connected to the transducer or signal common lines except when multiplexing differential signals. The card connections are flexible enough to permit 16-channel single-ended, 16-channel quasi-differential or 8-channel differential connections.

8-Channel Differential Connection

Connect channel 1 signal high and low inputs to CH 1 and CH 9, respectively. Repeat with channels 2–8 high and low to CH 2–CH 8 and CH 10–CH 16, respectively. Connect MUX 1–8 to AMP HI and MUX 9–16 to AMP LO; also connect REF 1 to AMP LO as shown in *Figure 1*. The data out will represent the difference in signal levels as seen by MUX 1–8 and MUX 9–16; that is, V_O = CH 1–CH 9 and so forth to CH 8–CH 16. Input signals must be somewhere referenced to ANA GND to insure that the input signals are within the ±10V common-mode voltage range of the system. To set the multiplexer logic to the differential mode, it is necessary to strap MUX SEL to 8-CH.

16-Channel Single-Ended Connection

Connect channel 1 signal high through channel 16 signal high to CH 1–CH 16, respectively. Connect channel 1 signal low through channel 16 signal low to COM 1–COM 16 as in *Figure 2*. Interconnect ANA GND, ANA COM, AMP LO, and REF 1; interconnect MUX 1–8, MUX 9–16 and AMP HI. Also strap MUX SEL to 16-CH.

16-Channel Quasi-Differential Connection

Connect all 16 pairs of signal lines as for 16-channel single-ended connection. Strap ANA COM, AMP LO, and REF 4 as in *Figure 3*, interconnect MUX 1–8, MUX 9–16 and AMP HI. Do not connect signals to ANA GND, however, signals must somewhere be referenced to ANA GND. Also strap MUX SEL to 16-CH.

AMPLIFIER

Gain

The amplifier gain may be set to any of the following values on a per-channel basis; 1, 2, 2 1/2, 5, 10, 20, 50, 100. Up to 4 different gains may be selected for use with any of the 16 data channels. Gain is selected by strapping the gain select terminals A1–A4 to the gain set terminals G1–G100. For example, gain 4 is set to 100 in *Figure 4* by strapping A4 to G100, gain 2 is set to unity by strapping A2 to G1, gain 3 is set to 2 by strapping A3 to G2, and gain 1 is set to 2.5 by strapping A1 to G2 1/2. If all channels have a range of 0–10.2375V, the amplifier need not be used at all unless desired. In this case, strap AMP LO, AMP HI and REF 1 to ANA GND; and strap MUX 1–8, MUX 9–16, and S&H IN, thus bypassing the amplifier as in *Figure 5a*.

An alternate connection will provide more precise gain accuracy when a unity gain, single-ended amplifier is required. The connection shown in *Figure 5b* bypasses the programmable gain amplifier, but retains a precise, unity gain, FET input, buffer amplifier. With this connection, it may be necessary to readjust the ADC zero. **Do not change the AMP zero control.**

An on-card memory must be loaded with the gain program for each channel from software control in the computer program. Gain A1 is selected by writing $XXX3_{16}$ into each desired channel at the selected channel addresses. Gain A2–A4 are selected by writing XXX2, XXX1 and XXX0, respectively.

Offset

When analog input signals range from zero upward or ± from zero, the amplifier should not be offset. Connecting REF 1, AMP LO, ANA COM, and ANA GND provides no offset. However, when analog input signals have a fixed minimum value and it is desired to utilize the entire scale range (e.g., V_{IN} = 1–5V), AMP LO can be offset by connecting to any of the reference voltages available from the on-card reference divider. These voltages are 0.1, 1, 5 and 10V; they are available at terminals V0.1, V1, V5 and V10. AMP LO can be offset to one value for gains A2–A4, and REF 1 can be offset to another value for gain A1. Perhaps, most common usage would be with only gain A1 offset, say to 1V for full scale range of 1–5V on A1 and zero referenced signals on the other gain settings. To effect this schedule, connect AMP LO to ANA GND and connect REF 1 to V1 as shown in *Figures 4, 6 and 7*. The AMP LO terminal is common for gains selected by A2–A4, while REF 1 is the equivalent AMP LO terminal for gain A1.

SAMPLE AND HOLD

The sample and hold circuit may be bypassed by connecting the AMP OUT and ADC IN terminals directly, as in *Figure 8*. If the sample and hold circuit is to be used, strap AMP OUT to S&H IN and strap S&H OUT to ADC IN, as in *Figure 7*. Since the S&H amplifier exhibits some offset and a slight gain error, both controls on the ADC for offset and full-scale may need readjustment if the S&H is bypassed. These 2 controls are factory adjusted for use with the S&H amplifier in the circuit.

ANALOG-TO-DIGITAL CONVERTER CONNECTIONS

The ADC may be used for either positive unipolar or for bipolar signals. When bipolar signals are to be coded, strap OFFSET to REF IN, strap CODE to COMP and strap D12 to BD11, as in *Figure 8*. This offsets the ADC range so that −10.240V is zero scale or $F800_{16}$ and 10.2375V is full-scale or $07FF_{16}$ in a 2's complement binary code with extended sign bit. If desired to use an offset binary code on bipolar signals, strap OFFSET to REF IN, CODE to BIN and D12 to L0, as in *Figure 11*. The result will be 0000_{16} for −10.240V input and $0FFF_{16}$ for 10.2375V input. To obtain extended sign, strap D12 to BD11 instead of L0.

Applications Information (Continued)

Channel Selection Logic

BA4	BA3	BA2	BA1	16-CH	8-CH
0	0	0	0	1	1–9
0	0	0	1	2	2–10
0	0	1	0	3	3–11
0	0	1	1	4	4–12
0	1	0	0	5	5–13
0	1	0	1	6	6–14
0	1	1	0	7	7–15
0	1	1	1	8	8–16
1	0	0	0	9	None
1	0	0	1	10	None
1	0	1	0	11	None
1	0	1	1	12	None
1	1	0	0	13	None
1	1	0	1	14	None
1	1	1	0	15	None
1	1	1	1	16	None

When using unipolar positive signals, strap OFFSET to ADC IN, strap CODE to BIN, and strap D12 to L0, as in *Figure 12* to obtain 0000_{16} at 0V input and $0FFF_{16}$ at 10.2375V input.

In all cases, the analog signal from the S&H is applied to the ADC by strapping S&H OUT to ADC IN.

REFERENCE

To use the internal reference, strap REF OUT to REF IN, as in *Figures 10 and 12*. To use an external 10.24V reference, connect the external reference positive to REF IN and negative to ANA GND, as in *Figure 10*. To use an external 10.00V reference, connect as for external 10.24V reference and also strap REF IN to V10. When using an external reference, it may be necessary to readjust the full-scale potentiometer which is factory set for the internal reference.

CHANNEL SELECTION

Channel selection is made by applying the appropriate digital code to terminals BA1 through BA4 in the following manner:

For 16 channel, strap MUX SEL to 16-CH. For 8 channel differential, strap MUX SEL to 8-CH.

Loading an address location with a gain-set data word (see AMPLIFIER, Gain, on previous page) will set the MUX to the addressed channel and initiate a conversion. The new data will be available approximately 120 μs later. By repeated (or selective) write gain operations, a desired channel may be repeatedly (or selectively) commanded to generate new data if desired.

ADDRESS DECODING

The data acquisition card is memory mapped and data is accessible by a memory read instruction at normal memory speeds. The system will work with either a 16 or an 8-bit data bus; addressing connections are slightly different for the two.

The BA terminals and the T terminals are compared to select the appropriate address code. For example, if a code of 0111 is desired, set the T terminals to code 0111.

The logic signals presented to address lines BA0–BA4 must remain stable during the data read or write access period. However, it is possible to latch address lines BA5–BA16 on a rising edge at the ADRS line. When no latching is required, strap ADRS to L0.

CONTROL BUS CONNECTIONS

The control bus connections are ADRS, MEMSEL, READ, WRITE, READY, and NINIT. READY is an output signal to the processor, and the other 5 are inputs to the data acquisition card. Logic sense select pins are also available as TMEM, TREAD and TWRITE. The sense of the READY signal may also be strap selected. These sense selections allow use of the card with almost any processor bus.

NINIT

An initializing signal from the processor at time of power-up or whenever commanded will initialize the data acquisition card by resetting the internal address counter to channel 1. This must be a negative true signal.

Applications Information (Continued)

CONNECT TERMINAL	FOR 16-BIT DATA BUS	FOR 8-BIT DATA BUS	STRAP FOR 8-BIT DATA BUS
T0	L0	VL	BD0 to BD8
BA0	L0	ADR0	BD1 to BD9
BA1	ADR0	ADR1	BD2 to BD10
BA2	ADR1	ADR2	BD3 to BD11
BA3	ADR2	ADR3	BD4 to BD12
BA4	ADR3	ADR4	BD5 to BD13
BA5	ADR4	ADR5	BD6 to BD14
BA6	ADR5	ADR6	BD7 to BD15
BA7	ADR6	ADR7	
BA8	ADR7	ADR8	
BA9	ADR8	ADR9	
BA10	ADR9	ADR10	Note. See *Figures 13–16* for examples
BA11	ADR10	ADR11	
BA12	ADR11	ADR12	
BA13	ADR12	ADR13	
BA14	ADR13	ADR14	
BA15	ADR14	ADR15	
BA16	ADR15	L0	
T16	L0 or VL	L0	
T5–T15	L0 or VL	L0 or VL	

MEMSEL

This input must be true to select the data card; it is normally connected to a memory select line or a memory/IO line. This insures that the on-card clock will be interrupted for the minimum possible period corresponding to the actual READ time. If there is no processor line of similar function, MEMSEL is strapped to READ and TMEM is strapped to WRITE. For positive true select, strap TMEM to L0. For zero true select, strap TMEM to VL.

READ

This input must be true to read data from the card; it is normally connected to a memory read control line. For positive true read, strap TREAD to VL. For zero true read, strap TREAD to L0.

WRITE

This input must be true to write a gain program into the card; it is normally connected to a memory write control line. For positive true write, strap TWRITE to L0. For zero true write, strap TWRITE to VL.

READ/WRITE

For use with processors having a single READ/WRITE control line, strap the READ and WRITE lines together and connect to the processor read/write line. For READ/$\overline{\text{WRITE}}$ operation, strap both TREAD and TWRITE to VL. For $\overline{\text{READ}}$/WRITE operation, strap both TREAD and TWRITE to V0.

ADRS

The ADRS line may be used to latch address data presented to inputs BA5–BA16. Data is latched on a rising (trailing) edge and is unlatched on the next falling edge. There is no latching capability at any other input. In most applications, the ADRS line is strapped to L0; and no latching takes place. However, there are some processors such as the PACE which utilize a single set of lines for both address and data. In these systems, an interface latch must be provided to hold the address data during the data transmission period. Using this card with a PACE system requires only a single 4-bit latch to hold address bits applied at BA1–BA4.

READY

The ready output signal indicates to the processor that the data card is ready to accept data in the write mode or that valid data will be on the bus in the read mode; it is normally connected to the processor ready or wait control line. In the read mode, the READY output will be available by 120 ns after a read command is received by the card; data will be on the bus by 220 ns after the read command. In the write mode, READY will be available by 850 ns after the write signal is received. The processor will not have to enter a wait cycle in the read mode; however, a wait cycle is necessary in the write mode due to internal timing requirements on the data card. To obtain a positive true READY signal, strap SEL RY to RY. To obtain a zero true READY signal, strap SEL RY to NRY.

DATA LINES

The data card may be used with either 8 or 16-bit data busses. For 16-bit busses, all 16 data lines are available. For 8-bit busses, the lower 8 bits must be paralleled with the upper 8 bits. Connect BD0 to BD8, BD1 to BD9, and so forth through BD7 to BD15. See under heading Analog-to-Digital Converter Connections for consideration of bits 12–15. The 12-bit data appears right justified on a 16-bit data field. For 2's complement bipolar data, the sign bit is extended to the 4 most significant bits. For binary data, the 4 most significant bits are zeros. All data is positive true. By reconnecting or reassigning data bus terminals, it is possible to connect for left-justified data on a 16-bit data bus. This is not possible for an 8-bit data bus. In this case, connect the CODE terminal to L0 to set the 4 unused bits to zero, per *Figure 10*.

Applications Information (Continued)

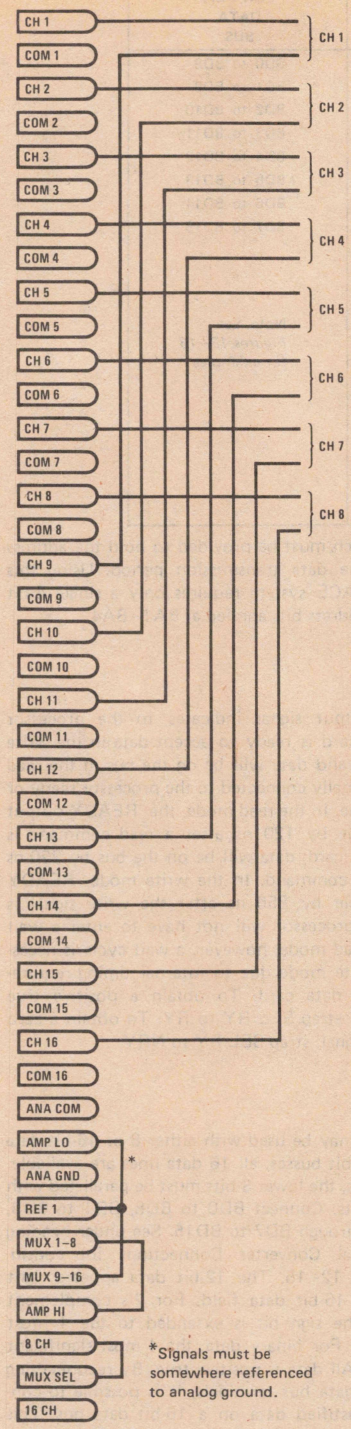

*Signals must be somewhere referenced to analog ground.

FIGURE 1. 8-Channel Differential Connection

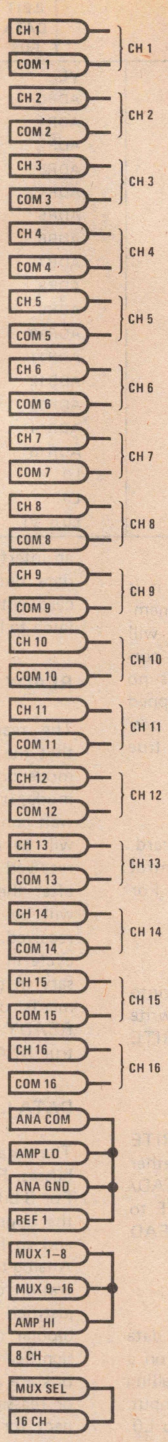

FIGURE 2. 16-Channel Single-Ended Connection

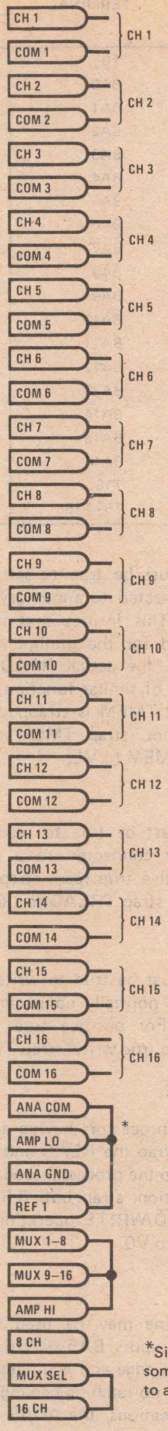

*Signals must be somewhere referenced to analog ground

FIGURE 3. 16-Channel Quasi-Differential Connection

Applications Information (Continued)

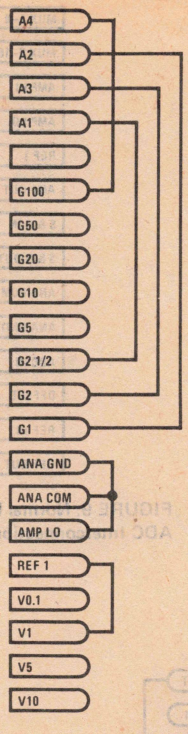

A4	Gain = 100	Range = 0–102.375 mV	1 LSB = 25 μV
A2	Gain = 1	Range = 0–10.2375V	1 LSB = 2.5 mV
A3	Gain = 2	Range = 0–5.11875V	1 LSB = 1.25 mV
A1	Gain = 2 1/2	Range = 1–5.095V	1 LSB = 1 mV

FIGURE 4. Gain and Offset Connections, An Example (See Page 5)

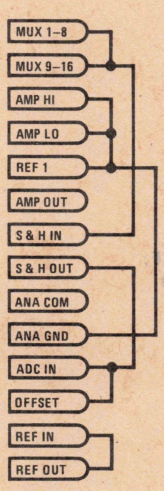

FIGURE 5a. Amplifier Completely Bypassed

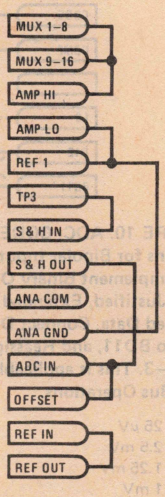

FIGURE 5b. Amplifier Bypassed Except for Single-Ended, Precise Unity-Gain FET Buffer

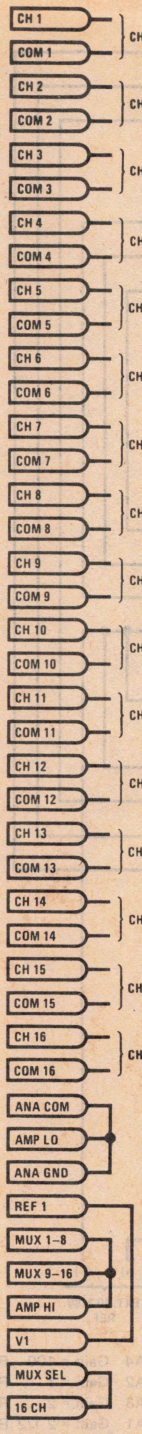

FIGURE 6. 16-Channel Single Ended Connection, One or More Channels Offset 1V as with V_{IN} = 1–5V

Applications Information (Continued)

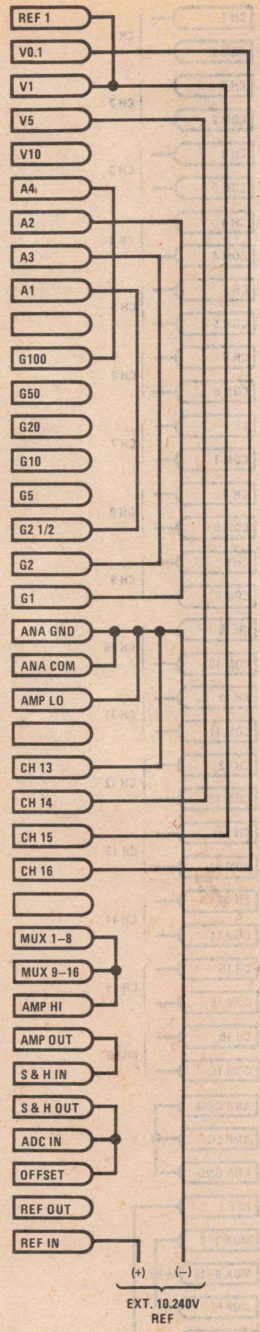

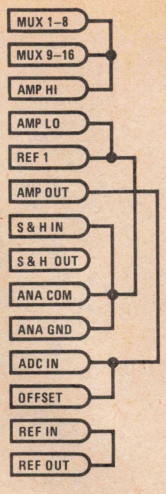

FIGURE 8. Sample and Hold Bypassed

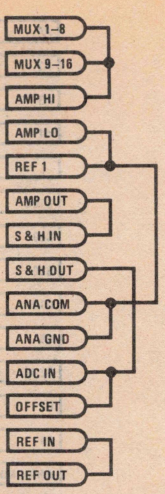

FIGURE 9. Normal MUX, AMP, S & H and ADC Interconnections

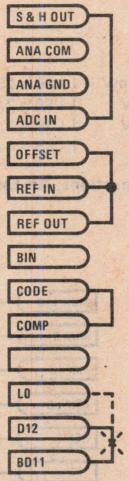

FIGURE 10. ADC, CODE and Logic Connections for Bipolar Inputs with Internal REF; 2's Complement Binary Output Code Data is Right-Justified, Extended Sign. For Left-Justified Data, Connect D12 to L0 Rather than to BD11, and Reassign Bits 12–15 as Bits 0–3. This is applicable Only to 16-Bit Data Bus Operations.

Ch 13 = 0V REF	A4	Gain = 100	Range = 0–102.375 mV	1 LSB = 25 μV
Ch 14 = 5V REF	A2	Gain = 1	Range = 0–10.2375V	1 LSB = 2.5 mV
Ch 15 = 1V REF	A3	Gain = 2	Range = 0–5.11875V	1 LSB = 1.25 mV
Ch 16 = 100 mV REF	A1	Gain = 2 1/2	Range = 1–5.095V	1 LSB = 1 mV

FIGURE 7. Example of Analog Connection with Multiplexed Reference Voltages for Calibration Purposes (Consider Accuracy of Internal REF If Used)

Applications Information (Continued)

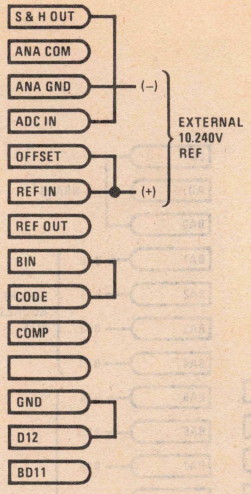

FIGURE 11. ADC, CODE and Logic Connections for Bipolar Inputs with External REF; Offset Binary Output Code Data is Right-Justified, Bits 12–15 are Zeros. For Left-Justified Data on a 16-Bit Data Bus, Reassign Data Bits 12–15 as Bits 0–3.

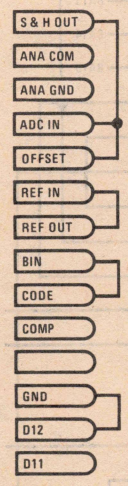

FIGURE 12. ADC, CODE and Logic Connections for Unipolar Inputs with Internal REF; Binary Output Code Data is Right-Justified, Bits 12–15 are Zeros.

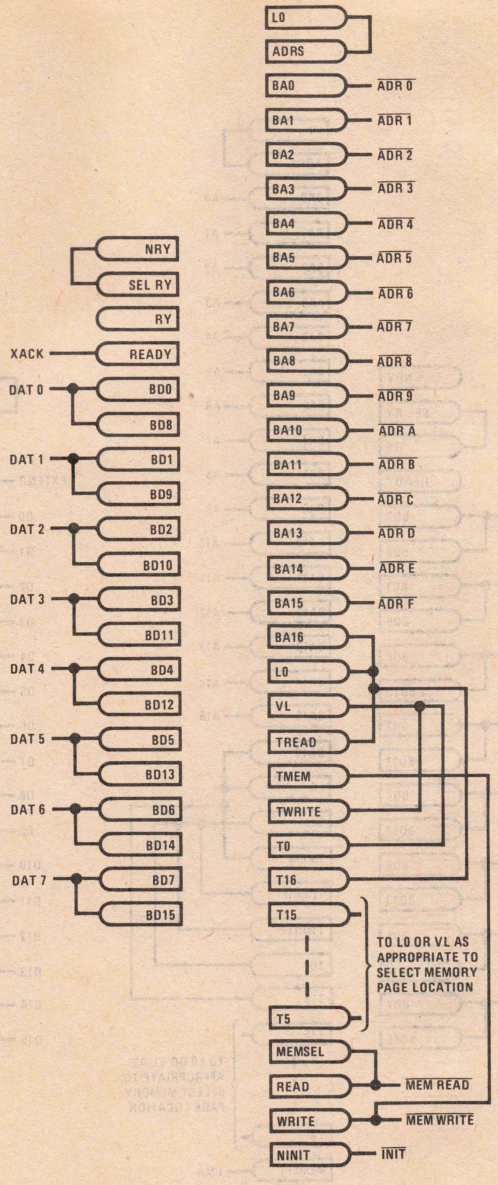

FIGURE 13. Bus and Logic Connections for 80/10 System

Applications Information (Continued)

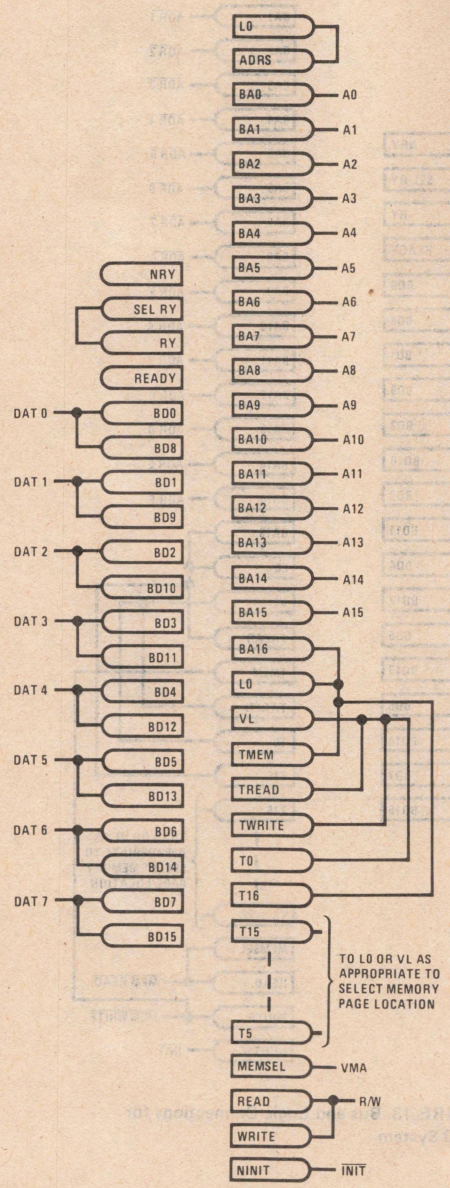

FIGURE 14. Bus and Logic Connections for 6800 System

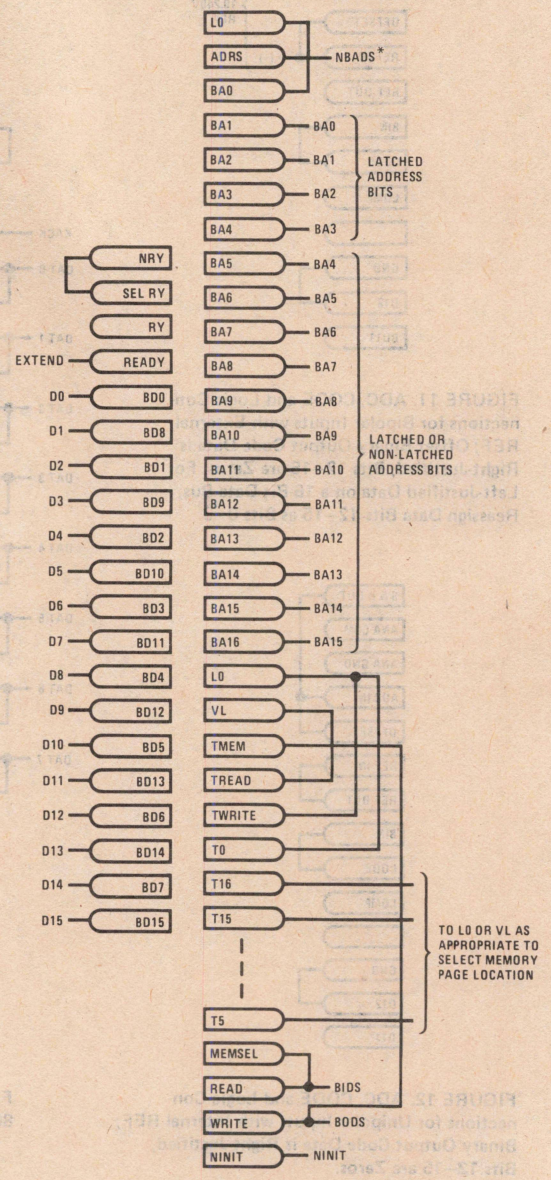

*To LO when all address bits are latched on the CPU card

FIGURE 15. Bus and Logic Connections for PACE

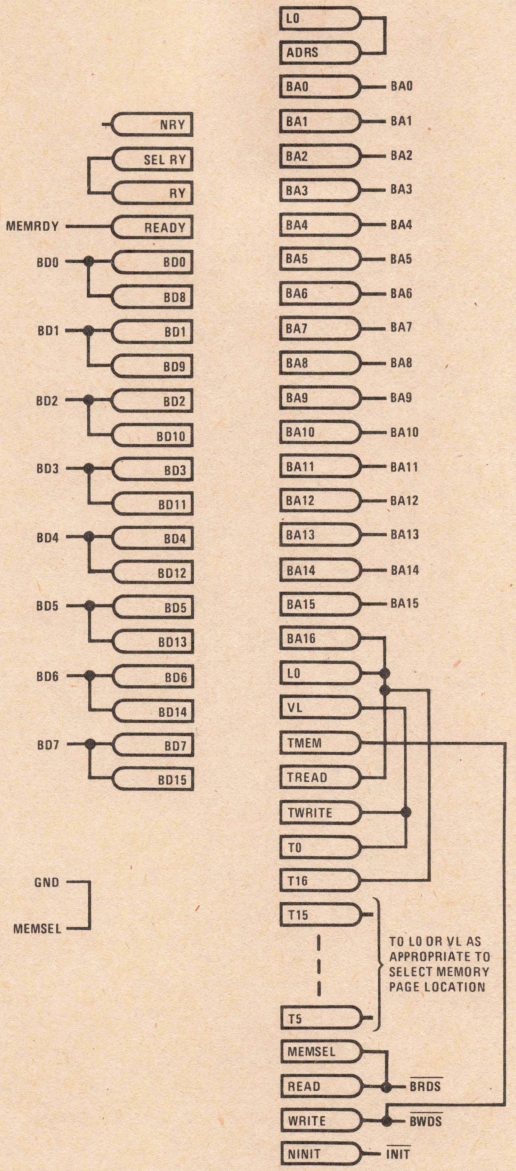

FIGURE 16. Bus and Logic Connections for SC/MP CPU with External RAM

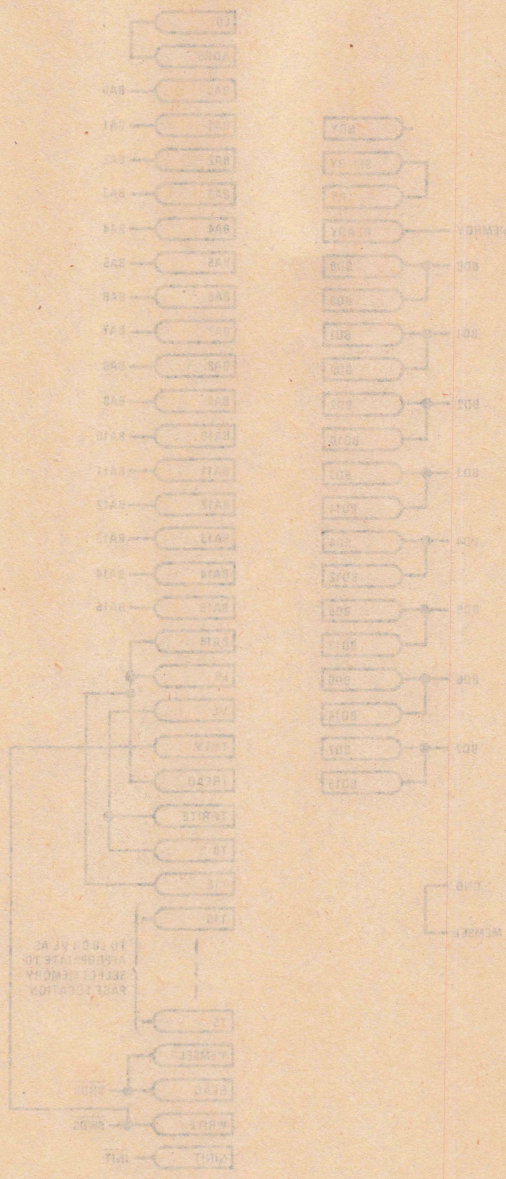
TO LOCATE AN ARBITRARY MEMORY SELECT REGISTER
MEMORY
BUS
BUS
BUS

Section 14

Active Filters and Telecommunication Products

14

Section 14. Active Filters (Building Blocks) Selection Guide

Function	Features	Frequency Accuracy	Q Accuracy	$Q \times F_C$	Part Number −55°C to 125°C	Part Number −25°C to 85°C	Page Number
Universal Active Filter	State Variable Building Block	±2.5%	±7.5%	50K	AF100-1	AF100-1C	14-8
		±1.0%	±7.5%	50K	AF100-2	AF100-2C	14-8
Universal Active Filter	State Variable Building Block Wide Bandwidth	±2.5%	±7.5%	200K		AF150-1C	14-27
		±1.0%	±7.5%	200K		AF150-2C	14-27
Dual Universal Active Filter	State Variable Building Block Two AF100 in one package	±2.5%	±7.5%	50K		AF151-1C	14-47
		±1.0%	±7.5%	50K		AF151-2C	14-47
		Resistor Accuracy	**Resistor Match**	**Resistor Tempco (ppm/°C)**			
General Impedance Converter (GIC)	Matched Resistors 7.5K and Controlled TC	1%	±0.2%/ 0.1%	±110 ±30	AF120H		14-114
		2%	±0.4%/ 0.2%	±110 ±60		AF120CH	14-114

Section 14. Tuned Active Filters Selection Guide

Function	Features	Cutoff/ Band Edge Freq. (Hz)	Passband Ripple (dB)	Stopband Frequency (Hz)	Stopband Attenuation (dB)	Gain Tolerance (dB)	Part Number	Page Number
Touch Tone* Filters for Dual Tone Multifrequency Receivers (DTMF)	High Band Splitter Filter	1209	±0.5	941	25	±0.5 @ 1336 Hz	AF101CJ	14-82
	Dial Tone Reject Filter	697	±0.5	440	34	±0.5 @ 941 Hz	AF102CJ	14-84
	Low Band Splitter Filter	941	±0.5	1209	25	±0.5 @ 852 Hz	AF103CJ	14-86
	697 Hz/770 Hz Dual Bandpass Filter	697 ± 0.5%		Q = 15 ± 0.5		±0.25 @ 697 Hz	AF111CJ	14-88
		770 ± 0.5%		Q = 15 ± 0.5		±0.25 @ 770 Hz		
	852 Hz/941 Hz Dual Bandpass Filter	852 ± 0.5%		Q = 15 ± 0.5		±0.25 @ 852 Hz	AF112CJ	14-88
		941 ± 0.5%		Q = 15 ± 0.5		±0.25 @ 941 Hz		
	1209 Hz/1336 Hz Dual Bandpass Filter	120 ± 0.5%		Q = 15 ± 0.5		±0.25 @ 1209 Hz	AF113CJ	14-88
		1336 ± 0.5%		Q = 15 ± 0.5		±0.25 @ 1336 Hz		
	1477 Hz/1633 Hz Dual Bandpass Filter	1477 ± 0.5%		Q = 15 ± 0.5		±0.25 @ 1477 Hz	AF114CJ	14-88
		1633 ± 0.5%		Q = 15 ± 0.5		±0.25 @ 1633 Hz		
	DTMF Low Band Splitter 6th Order Bandpass Filter	690/950	5 p-p	500/1200	38	±1.5 @ 800 Hz	AF121-1CJ	14-90
		690/950	2 p-p	500/1200	40	±0.5 @ 820 Hz	AF121-2CJ	14-90
	DTMF High Band Splitter 6th Order Bandpass Filter	1200/1650	4 p-p	950/2200	38	±0.5 @ 1400 Hz	AF122-1CJ	14-90
		1200/1650	2 p-p	950/2200	40	±0.5 @ 1480 Hz	AF122-2CJ	14-90
Addition Tone Receiver Circuits	Automatic Gain Control (AGC) Threshold Detector (Dual)						AF104 AF105 AF110	14-108 14-108 14-112
Pulse Code Modulation (PCM) Filters 8 KHz Sampling Rate	Transmit/Receive PCM Filter for 8 KHz Sampling (sin x)/x Correction	3000 3000	±0.5 ±0.5	5300 4900	20 20	±0.5 ±0.5	AF132CJ	14-94
	5th Order Low Pass Filter Transmit PCM Filter	3000 3000	±0.3 ±0.125	4600 4600	30 32	External Resistor	AF133-1CJ AF133-2CJ	14-98 14-98
	5th Order Low Pass Filter	3000	±0.3	4600	30	±1.0 @ 1 KHz	AF134-1CJ	14-98
	Receive PCM Filter	3000	±0.125	4600	32	±0.5 @ 1 KHz	AF134-2CJ	14-98
Tunable Bandpass Filter/ Oscillator	Single Resistor Tuning	Bandwidth 2.5 Hz or 5 Hz		Center Frequency 60 Hz to 270 Hz			AF99CJ	14-5

* Registered Trademark of Western Electric Co.

National Semiconductor

Active Filters

AF99 tunable bandpass filter/oscillator

general description

The AF99 is a low frequency bandpass filter that is tunable with a single resistor. Additionally, with a few external components, the AF99 can be used as an oscillator. Therefore, one device can be used as a complete tone generating and receiving system. The filter bandwidth is selected by one of two external jumpers to be 2.5 Hz or 5.0 Hz. The frequency adjustment range is from 60 Hz to 270 Hz. These features make the device ideal for tone signaling, tone activated industrial control systems, tone activated communication systems, two-wire sensing and control, alarms, and the like. An internal biasing amplifier is included to facilitate using the device on dual supplies or single ended supply applications. The supply current drain is low to allow for remote or battery operated systems.

features

- Adjustable center frequency
- Bandwidth options 2.5 Hz or 5 Hz
- Bandwidth independent of frequency setting
- Fixed voltage gain independent of settings
- Single or split supply operation
- Low current drain
- Low cost

applications

- Tone control systems
- Alarm systems
- Tone activated squelch
- Remote sensing and control systems
- Two-wire signaling
- Doppler shift burglar alarms

schematic diagram

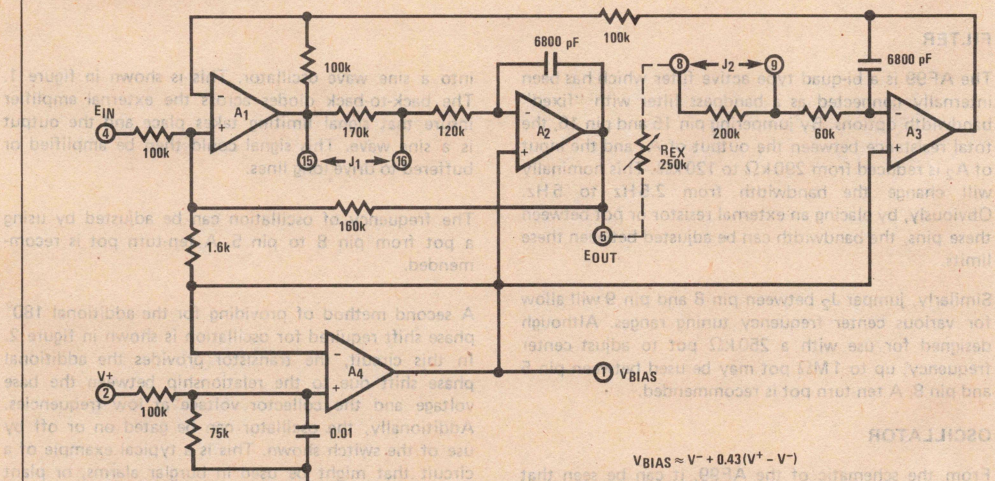

$V_{BIAS} \approx V^- + 0.43(V^+ - V^-)$

Schematic Diagram

typical applications

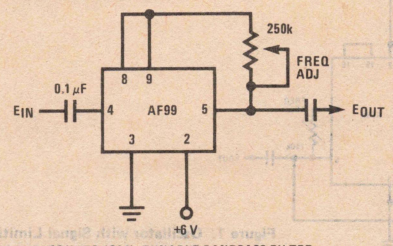

80 Hz TO 130 Hz TUNABLE BANDPASS FILTER
BANDWIDTH = 2.5 Hz, SINGLE SUPPLY

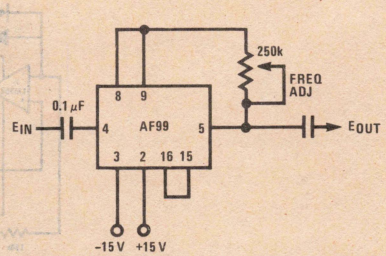

125 Hz TO 270 Hz TUNABLE BANDPASS FILTER
BANDWIDTH = 5 Hz, DUAL SUPPLIES

absolute maximum ratings

Supply Voltage Between Pins 2 and 3	32 V
Operating Temperature Range	−25°C to +85°C
Storage Temperature Range	−55°C to +125°C
Short Circuit Duration, Any Pin	continuous
Lead Temperature (Soldering, 10 seconds)	300°C

electrical specifications

These specifications apply at +25°C unless otherwise specified.

Parameter	Conditions	Min	Typ	Max	Units
Tuning Range	See Connection table	60		270	Hz
Voltage Gain	$R_L = 10\,k\Omega$ $R_S = 50\,\Omega$		4		dB
Input Impedance			100		kΩ
Bandwidth	J_1 – IN J_1 – OUT	4.0 2.0	5.0 2.5	6.0 3.0	Hz Hz
Power Supply	pin 2 to pin 3	6		32	V
Power Supply Current	V+ = +15 V V− = −15 V		1.5 1.5	3.0 3.0	mA mA

general information

FILTER

The AF99 is a bi-quad type active filter which has been internally connected as a bandpass filter with "fixed" bandwidth options. By jumpering pin 15 and pin 16, the total resistance between the output of A_1 and the input of A_2 is reduced from 290 kΩ to 120 kΩ. This nominally will change the bandwidth from 2.5 Hz to 5 Hz. Obviously, by placing an external resistor or pot between these pins, the bandwidth can be adjusted between these limits.

Similarly, jumper J_2 between pin 8 and pin 9 will allow for various center frequency tuning ranges. Although designed for use with a 250 kΩ pot to adjust center frequency, up to 1 MΩ pot may be used between pin 5 and pin 8. A ten-turn pot is recommended.

OSCILLATOR

From the schematic of the AF99, it can be seen that from the input, pin 4, to the output, pin 5, is negative feedback. However, by inserting an additional amplifier, connected in the inverting mode, the AF99 can be made into a sine wave oscillator. This is shown in figure 1. The back-to-back diodes across the external amplifier insure that signal limiting takes place and the output is a sine wave. This signal could then be amplified or buffered to drive long lines.

The frequency of oscillation can be adjusted by using a pot from pin 8 to pin 5. A ten-turn pot is recommended.

A second method of providing for the additional 180° phase shift required for oscillation is shown in figure 2. In this circuit, the transistor provides the additional phase shift due to the relationship between the base voltage and the collector voltage at low frequencies. Additionally, the oscillator can be gated on or off by use of the switch shown. This is a typical example of a circuit that might be used in burglar alarms, or plant monitoring of systems. A switch closure identifies an alarm condition and the frequency indicates where the alarm occurs.

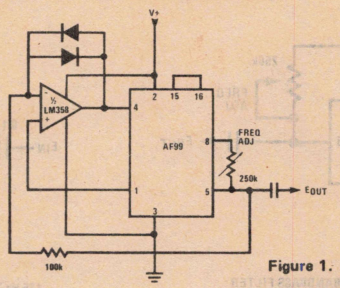

Figure 1. Oscillator with Signal Limiting (E_{OUT} = 0.8 Vrms, 6V < V_{CC} < 32 V)

connections table

J_1	J_2	Tuning Range (Hz)	Bandwidth (Hz)
0	0	60 - 80	2.5
0	1	80 - 130	2.5
1	0	100 - 130	5.0
1	1	125 - 270	5.0

typical applications

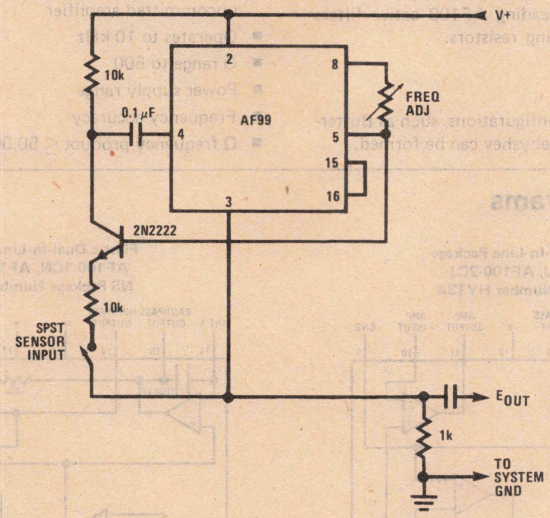

Figure 2. 2-Wire Tone Encoder

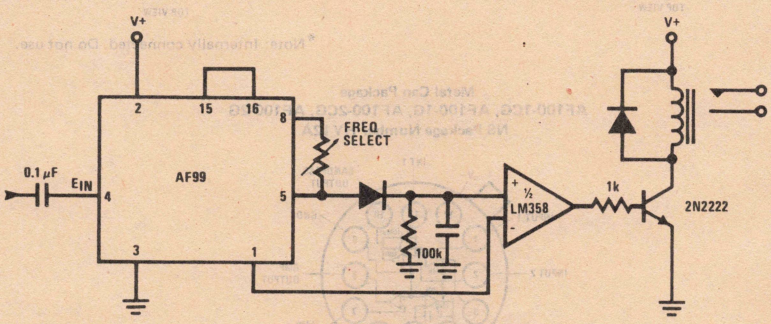

Figure 3. Tone Decoder with Relay Output

National Semiconductor

AF100 Universal Active Filter

General Description

The AF100 state variable active filter is a general second order lumped RC network. Only four external resistors program the AF100 for specific second order functions. Lowpass, highpass, and bandpass functions are available simultaneously at separate outputs. Notch and allpass functions are available by summing the outputs in the uncommitted output summing amplifier. Higher order systems are realized by cascading AF100 active filters with appropriate programming resistors.

Any of the classical filter configurations, such as Butterworth, Bessel, Cauer, and Chebyshev can be formed.

Features

- Military or commercial specifications
- Independent Q, frequency, gain adjustments
- Low sensitivity to external component variation
- Separate lowpass, highpass, bandpass outputs
- Inputs may be differential, inverting, or non-inverting
- Allpass and notch outputs may be formed using uncommitted amplifier
- Operates to 10 kHz
- Q range to 500
- Power supply range ±5V to ±18V
- Frequency accuracy ±1% unadjusted
- Q frequency product $\leq$ 50,000

Connection Diagrams

Ceramic Dual-In-Line Package
AF100-1CJ, AF100-2CJ
NS Package Number HY13A

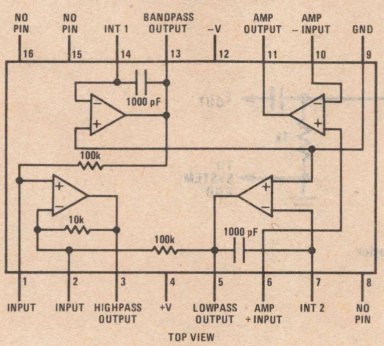

Plastic Dual-In-Line Package
AF100-1CN, AF100-2CN
NS Package Number N16A

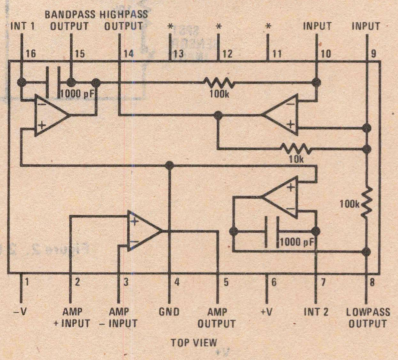

*Note: Internally connected. Do not use.

Metal Can Package
AF100-1CG, AF100-1G, AF100-2CG, AF100-2G
NS Package Number HY12A

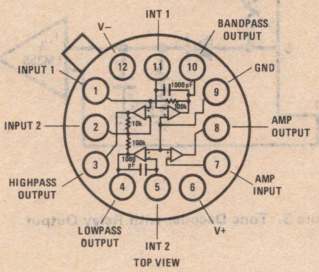

Absolute Maximum Ratings

Supply Voltage	±18V
Power Dissipation	900 mW/Package (500 mW/Amp)
Differential Input Voltage	±36V
Output Short Circuit Duration (Note 1)	Infinite
Lead Temperature (Soldering, 10 seconds)	300°C
Operating Temperature	
AF100-1CJ, AF100-2CJ, AF100-1CG, AF100-2CG, AF100-1CN, AF100-2CN	−25°C to +85°C
AF100-1G, AF100-2G	−55°C to +125°C
Storage Temperature	
AF100-1G, AF100-2G	−65°C to +125°C
AF100-1CG, AF100-2CG, AF100-1CJ, AF100-2CJ, AF100-1CN, AF100-2CN	−25°C to +100°C

Electrical Characteristics (Complete Active Filter) (Note 2)

PARAMETER	CONDITIONS	MIN	TYP	MAX	UNITS
Frequency Range	$f_C \times Q \leq 50{,}000$			10k	Hz
Q Range	$f_C \times Q \leq 50{,}000$			500	Hz/Hz
f_O Accuracy					
AF100-1, AF100-1C	$f_C \times Q \leq 10{,}000$, $T_A = 25°C$			±2.5	%
AF100-2, AF100-2C	$f_C \times Q \leq 10{,}000$, $T_A = 25°C$			±1.0	%
f_O Temperature Coefficient			±50	±150	ppm/°C
Q Accuracy	$f_C \times Q \leq 10{,}000$, $T_A = 25°C$			±7.5	%
Q Temperature Coefficient			±300	±750	ppm/°C
Power Supply Current	$V_S = \pm 15V$		2.5	4.5	mA

Electrical Characteristics (Internal Op Amp) (Note 3)

PARAMETER	CONDITIONS	MIN	TYP	MAX	UNITS
Input Offset Voltage	$R_S \leq 10\ k\Omega$		1.0	6.0	mV
Input Offset Current			4	50	nA
Input Bias Current			30	200	nA
Input Resistance			2.5		MΩ
Large Signal Voltage Gain	$R_L \geq 2k$ $V_{OUT} = \pm 10V$	25	160		V/mV
Output Voltage Swing	$R_L = 10\ k\Omega$	±12	±14		V
	$R_L = 2\ k\Omega$	±10	±13		V
Input Voltage Range		±12			V
Common Mode Rejection Ratio	$R_S \leq 10\ k\Omega$	70	90		dB
Supply Voltage Rejection Ratio	$R_S \leq 10\ k\Omega$	77	96		dB
Output Short Circuit Current			25		mA
Slew Rate (Unity Gain)			0.6		V/μs
Small Signal Bandwidth			1		MHz
Phase Margin			60		Degrees

Note 1: Any of the amplifiers can be shorted to ground indefinitely, however more than one should not be simultaneously shorted as the maximum junction temperature will be exceeded.

Note 2: Specifications apply for $V_S = \pm 15V$, over −25°C to +85°C for the AF100-1C and AF100-2C and over −55°C to +125°C for the AF100-1 and AF100-2, unless otherwise specified.

Note 3: Specifications apply for $V_S = \pm 15V$, $T_A = 25°C$.

Applications Information

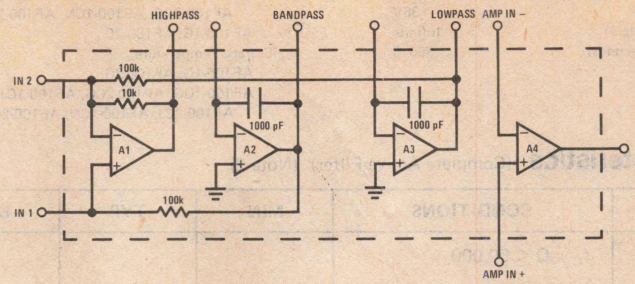

FIGURE 1. AF100 Schematic

CIRCUIT DESCRIPTION AND OPERATION

A schematic of the AF100 is shown in *Figure 1.* Amplifier A1 is a summing amplifier with inputs from integrator A2 to the non-inverting input and integrator A3 to the inverting input. Amplifier A4 is an uncommitted amplifier.

By adding external resistors the circuit can be used to generate the second order system

$$T(s) = \frac{a_3 s^2 + a_2 s + a_1}{s^2 + b_2 s + b_1}$$

The denominator coefficients determine the complex pole pair location and the quality of the poles where

$$\omega_0 = \sqrt{b_1} = \text{the radian center frequency}$$

$$Q = \frac{\omega_0}{b_2} = \text{the quality of the complex pole pair}$$

If the output is taken from the output of A1, numerator coefficients a_1 and a_2 equal zero, and the transfer function becomes:

$$T(s) = \frac{a_3 s^2}{s^2 + \frac{\omega_0}{Q} s + \omega_0^2} \qquad \text{(highpass)}$$

If the output is taken from the output of A2, numerator coefficients a_1 and a_3 equal zero and the transfer function becomes:

$$T(s) = \frac{a_2 s}{s^2 + \frac{\omega_0}{Q} s + \omega_0^2} \qquad \text{(bandpass)}$$

If the output is taken from the output of A3, numerator coefficients a_3 and a_2 equal zero and the transfer function becomes:

$$T(s) = \frac{a_1}{s^2 + \frac{\omega_0}{Q} s + \omega_0^2} \qquad \text{(lowpass)}$$

Using proper input and output connections the circuit can also be used to generate the transfer functions for a notch and allpass filter.

In the transfer function for a notch function a_2 becomes zero, a_1 equals 1, and a_3 equals ω_Z^2. The transfer function becomes:

$$T(s) = \frac{s^2 + \omega_Z^2}{s^2 + \frac{\omega_0}{Q} s + \omega_0^2} \qquad \text{(notch)}$$

In the allpass transfer function $a_1 = 1$, $a_2 = -\omega_0/Q$ and $a_3 = \omega_0^2$. The transfer function becomes:

$$T(s) = \frac{s^2 - \frac{\omega_0}{Q} s + \omega_0^2}{s^2 + \frac{\omega_0}{Q} s + \omega_0^2} \qquad \text{(allpass)}$$

COMMON CONFIGURATIONS

The specific transfer functions for some of the most useful circuit configurations using the AF100 are illustrated in *Figures 2 through 8.* Also included are the gain equations for each transfer function in the frequency band of interest, the Q equation, center frequency equation and the Q determining resistor equation.

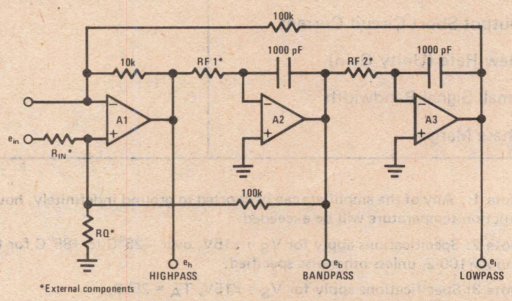

FIGURE 2. Non-inverting Input ($Q > Q_{MIN}$, See Q Tuning Section)

Applications Information (Continued)

a) Non-inverting input *(Figure 2)* transfer equations are:

$$\frac{e_h}{e_{IN}} = \frac{s^2\left[\dfrac{1.1}{1+\dfrac{R_{IN}}{10^5}+\dfrac{R_{IN}}{RQ}}\right]}{\Delta} \quad \text{(highpass)}$$

$$\frac{e_b}{e_{IN}} = \frac{-s\,\omega_1\left[\dfrac{1.1}{1+\dfrac{R_{IN}}{10^5}+\dfrac{R_{IN}}{RQ}}\right]}{\Delta} \quad \text{(bandpass)}$$

$$\frac{e_\ell}{e_{IN}} = \frac{\omega_1\omega_2\left[\dfrac{1.1}{1+\dfrac{R_{IN}}{10^5}+\dfrac{R_{IN}}{RQ}}\right]}{\Delta} \quad \text{(lowpass)}$$

$$\omega_1 = \frac{10^9}{R_{F1}} \qquad \omega_2 = \frac{10^9}{R_{F2}}$$

where

$$\Delta = s^2 + s\left[\frac{1.1}{1+\dfrac{10^5}{RQ}+\dfrac{10^5}{R_{IN}}}\right]\omega_1 + 0.1\,\omega_1\omega_2$$

$$\left.\frac{e_\ell}{e_{IN}}\right|_{s\to 0} = \frac{11}{\left(1+\dfrac{R_{IN}}{10^5}+\dfrac{R_{IN}}{RQ}\right)}$$

$$\left.\frac{e_h}{e_{IN}}\right|_{s\to\infty} = \frac{1.1}{\left(1+\dfrac{R_{IN}}{10^5}+\dfrac{R_{IN}}{RQ}\right)}$$

$$\left.\frac{e_b}{e_{IN}}\right|_{\omega=\omega_0} = -\frac{\left(1+\dfrac{10^5}{RQ}+\dfrac{10^5}{R_{IN}}\right)}{\left(1+\dfrac{R_{IN}}{10^5}+\dfrac{R_{IN}}{RQ}\right)}$$

$$\omega_0 = \sqrt{0.1\,\omega_1\omega_2}$$

$$Q = \left(\frac{1+\dfrac{10^5}{R_{IN}}+\dfrac{10^5}{RQ}}{1.1}\right)\sqrt{0.1\left(\frac{\omega_2}{\omega_1}\right)}$$

$$RQ = \frac{10^5}{\left(\dfrac{1.1Q}{\sqrt{0.1\dfrac{\omega_2}{\omega_1}}}\right) - 1 - \dfrac{10^5}{R_{IN}}}$$

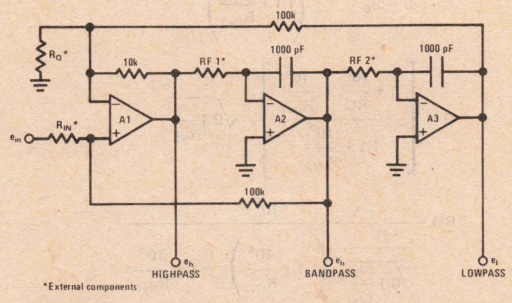

FIGURE 3. Non-Inverting Input ($Q < Q_{MIN}$, See Q Tuning Section)

b) Non-inverting input *(Figure 3)* transfer equations are:

$$\frac{e_h}{e_{IN}} = \frac{s^2\left[\dfrac{1.1+\dfrac{10^4}{RQ}}{1+\dfrac{R_{IN}}{10^5}}\right]}{\Delta} \quad \text{(highpass)}$$

$$\frac{e_b}{e_{IN}} = \frac{-s\,\omega_1\left[\dfrac{1.1+\dfrac{10^4}{RQ}}{1+\dfrac{R_{IN}}{10^5}}\right]}{\Delta} \quad \text{(bandpass)}$$

$$\frac{e_\ell}{e_{IN}} = \frac{\omega_1\omega_2\left[\dfrac{1.1+\dfrac{10^4}{RQ}}{1+\dfrac{R_{IN}}{10^5}}\right]}{\Delta} \quad \text{(lowpass)}$$

$$\omega_1 = \frac{10^9}{R_{F1}} \qquad \omega_2 = \frac{10^9}{R_{F2}}$$

where

$$\Delta = s^2 + s\,\omega_1\left[\frac{1.1+\dfrac{10^4}{RQ}}{1+\dfrac{10^5}{R_{IN}}}\right] + 0.1\,\omega_1\omega_2$$

$$\left.\frac{e_\ell}{e_{IN}}\right|_{s\to 0} = \frac{1.1+\dfrac{10^4}{RQ}}{0.1\left(1+\dfrac{R_{IN}}{10^5}\right)}$$

$$\left.\frac{e_h}{e_{IN}}\right|_{s\to\infty} = \frac{1.1+\dfrac{10^4}{RQ}}{1+\dfrac{R_{IN}}{10^5}}$$

$$\left.\frac{e_b}{e_{IN}}\right|_{\omega=\omega_0} = -\frac{1+\dfrac{10^5}{R_{IN}}}{1+\dfrac{R_{IN}}{10^5}}$$

$$\omega_0 = \sqrt{0.1\,\omega_1\omega_2}$$

$$Q = \left[\frac{1+\dfrac{10^5}{R_{IN}}}{1.1+\dfrac{10^4}{RQ}}\right]\sqrt{0.1\frac{\omega_2}{\omega_1}}$$

$$RQ = \frac{10^4}{\left(1+\dfrac{10^5}{R_{IN}}\right)\left(\dfrac{\sqrt{0.1\dfrac{\omega_2}{\omega_1}}}{Q}\right) - 1.1}$$

Applications Information (Continued)

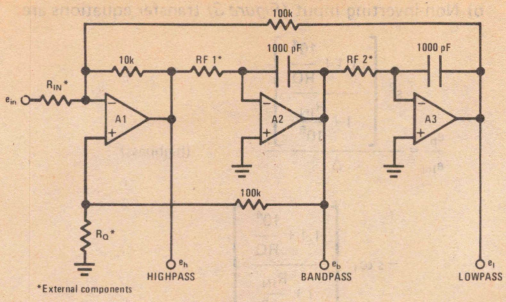

FIGURE 4. Inverting Input

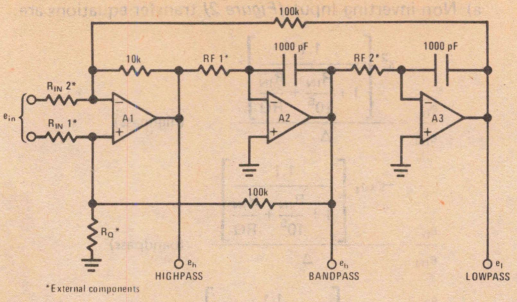

FIGURE 5. Differential Input

c) Inverting input *(Figure 4)* transfer function equations are:

$$\frac{e_h}{e_{IN}} = \frac{-s^2 \dfrac{10^4}{R_{IN}}}{\Delta} \qquad \text{(highpass)}$$

$$\frac{e_b}{e_{IN}} = \frac{s\,\omega_1 \dfrac{10^4}{R_{IN}}}{\Delta} \qquad \text{(bandpass)}$$

$$\frac{e_\ell}{e_{IN}} = \frac{-\omega_1\,\omega_2 \dfrac{10^4}{R_{IN}}}{\Delta} \qquad \text{(lowpass)}$$

$$\omega_1 = \frac{10^9}{R_{F1}} \qquad \omega_2 = \frac{10^9}{R_{F2}}$$

where

$$\Delta = s^2 + s\,\omega_1 \left[\frac{1.1 + \dfrac{10^4}{R_{IN}}}{1 + \dfrac{10^5}{R_Q}} \right] + 0.1\,\omega_1\omega_2$$

$$\left.\frac{e_\ell}{e_{IN}}\right|_{s \to 0} = -\frac{10^5}{R_{IN}} \qquad \text{(lowpass)}$$

$$\left.\frac{e_h}{e_{IN}}\right|_{s \to \infty} = -\frac{10^4}{R_{IN}} \qquad \text{(highpass)}$$

$$\left.\frac{e_b}{e_{IN}}\right|_{\omega = \omega_0} = \frac{\dfrac{10^4}{R_{IN}}\left(1 + \dfrac{10^5}{RQ}\right)}{1.1 + \dfrac{10^4}{R_{IN}}} \qquad \text{(bandpass)}$$

$$\omega_0 = \sqrt{0.1\,\omega_1\omega_2}$$

$$Q = \left[\frac{1 + \dfrac{10^5}{RQ}}{1.1 + \dfrac{10^4}{R_{IN}}} \right] \sqrt{0.1\,\frac{\omega_2}{\omega_1}}$$

$$RQ = \frac{10^5}{\dfrac{Q}{\sqrt{0.1\,\dfrac{\omega_2}{\omega_1}}}\left(1.1 + \dfrac{10^4}{R_{IN}}\right) - 1}$$

d) Differential input *(Figure 5)* transfer function equations are:

$$\frac{e_h}{e_{IN}} = \frac{s^2 \dfrac{10^4}{R_{IN2}}}{\Delta} \qquad \text{(highpass)}$$

$$\frac{e_b}{e_{IN}} = \frac{-s\,\omega_1 \dfrac{10^4}{R_{IN2}}}{\Delta} \qquad \text{(bandpass)}$$

$$\frac{e_\ell}{e_{IN}} = \frac{\omega_1\,\omega_2 \dfrac{10^4}{R_{IN2}}}{\Delta} \qquad \text{(lowpass)}$$

$$\omega_1 = \frac{10^9}{R_{F1}} \qquad \omega_2 = \frac{10^9}{R_{F2}}$$

where

$$\Delta = s^2 + s\,\omega_1 \left[\frac{1.1 + \dfrac{10^4}{R_{IN2}}}{1 + \dfrac{10^5}{RQ} + \dfrac{10^5}{R_{IN1}}} \right] + 0.1\,\omega_1\omega_2$$

$$\left.\frac{e_\ell}{e_{IN}}\right|_{s \to 0} = \frac{10^5}{R_{IN2}}$$

$$\left.\frac{e_h}{e_{IN}}\right|_{s \to \infty} = \frac{10^4}{R_{IN2}}$$

$$\left.\frac{e_b}{e_{IN}}\right|_{\omega = \omega_0} = \frac{-\dfrac{10^4}{R_{IN2}}\left(1 + \dfrac{10^5}{R_{IN1}} + \dfrac{10^5}{RQ}\right)}{\left(1.1 + \dfrac{10^4}{R_{IN2}}\right)}$$

$$Q = \left[\frac{1 + \dfrac{10^5}{RQ} + \dfrac{10^5}{R_{IN1}}}{1.1 + \dfrac{10^4}{R_{IN2}}} \right] \sqrt{0.1\,\frac{\omega_2}{\omega_1}}$$

$$RQ = \frac{10^5}{\dfrac{Q}{\sqrt{0.1\,\dfrac{\omega_2}{\omega_1}}}\left(1.1 + \dfrac{10^4}{R_{IN2}}\right) - 1 - \dfrac{10^5}{R_{IN1}}}$$

Applications Information (Continued)

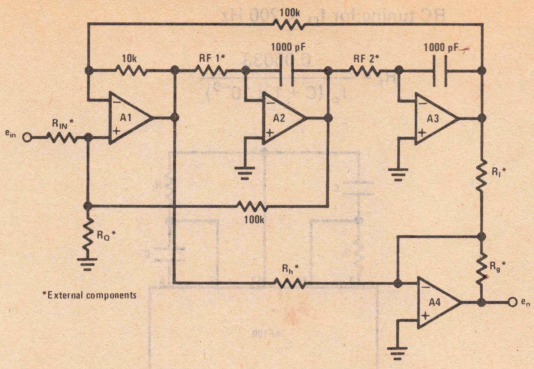

FIGURE 6. Output Notch Using All Four Amplifiers

e) Output notch *(Figure 6)* transfer function equations are:

$$\frac{e_n}{e_{IN}} = \frac{(s^2 + \omega_Z^2)\left[\dfrac{1.1}{1 + \dfrac{R_{IN}}{10^5} + \dfrac{R_{IN}}{RQ}}\right]\dfrac{R_g}{R_h}}{s^2 + s\,\omega_1\left[\dfrac{1.1}{1 + \dfrac{10^5}{RQ} + \dfrac{10^5}{R_{IN}}}\right] + 0.1\,\omega_1\omega_2}$$

$$\omega_1 = \frac{10^9}{R_{F1}} \qquad \omega_2 = \frac{10^9}{R_{F2}} \qquad \omega_0 = \sqrt{0.1\,\omega_1\omega_2}$$

$$\omega_Z = \omega_0\sqrt{\frac{10\,R_h}{R_\ell}}$$

$$\left.\frac{e_n}{e_{IN}}\right|_{s \to 0} = \frac{11}{\left(1 + \dfrac{R_{IN}}{10^5} + \dfrac{R_{IN}}{RQ}\right)}\frac{R_g}{R_\ell}$$

$$\left.\frac{e_n}{e_{IN}}\right|_{s \to \infty} = \frac{1.1}{\left(1 + \dfrac{R_{IN}}{10^5} + \dfrac{R_{IN}}{RQ}\right)}\frac{R_g}{R_h}$$

$$\left.\frac{e_n}{e_{IN}}\right|_{\omega = \omega_Z} = 0$$

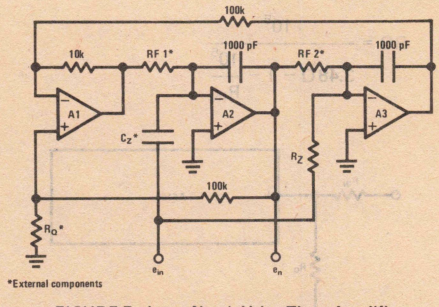

FIGURE 7. Input Notch Using Three Amplifiers

j) Input notch *(Figure 7)* transfer function equations are:

$$\frac{e_n}{e_{IN}} = \frac{\dfrac{C_Z}{10^{-9}}\left[s^2 + \omega_Z^2\right]}{s^2 + s\,\omega_1\left[\dfrac{1.1\,RQ}{10^5 + RQ}\right] + \omega_0^2}$$

$$\omega_1 = \frac{10^9}{R_{F1}} \qquad \omega_2 = \frac{10^9}{R_{F2}}$$

$$\omega_Z = \omega_0\sqrt{\frac{RF2 \times 10^{-9}}{R_Z\,C_Z}} \qquad \omega_0 = \sqrt{0.1\,\omega_1\omega_2}$$

$$\left.\frac{e_n}{e_{IN}}\right|_{\omega \to 0} = -\frac{R_{F2}}{R_Z}$$

$$\left.\frac{e_n}{e_{IN}}\right|_{\omega \to \infty} = -\frac{C_Z}{10^{-9}}$$

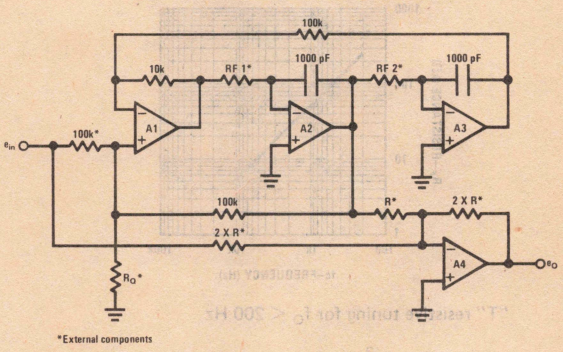

FIGURE 8. Allpass

g) Allpass *(Figure 8)* transfer function equations are:

$$\frac{e_o}{e_{IN}} = -\left[\frac{s^2 - s\,\omega_1\left[\dfrac{1.1}{2 + \dfrac{R_{IN}}{RQ}}\right] + \omega_0^2}{s^2 + s\,\omega_1\left[\dfrac{1.1}{2 + \dfrac{R_{IN}}{RQ}}\right] + \omega_0^2}\right]$$

$$Q = \frac{2 + \dfrac{10^5}{RQ}}{1.1}\sqrt{0.1\,\frac{\omega_2}{\omega_1}}$$

$$\omega_1 = \frac{10^9}{R_{F1}} \qquad \omega_2 = \frac{10^9}{R_{F2}}$$

$$\omega_0 = \sqrt{0.1\,\omega_1\omega_2}$$

Time delay at $\omega_0 = \dfrac{2Q}{\omega_0}$ seconds

FREQUENCY TUNING

To tune the AF100 two resistors are required for frequencies between 200 Hz and 10 kHz. For lower frequencies "T" tuning or addition of external capacitors

Applications Information (Continued)

is required. Using external capacitors allows the user to go as low in frequency as he desires. "T" tuning and external capacitors can be used together.

Two resistor tuning for 200 Hz to 10 kHz

$$R_f = \frac{50.33 \times 10^6}{f_o}\ \Omega$$

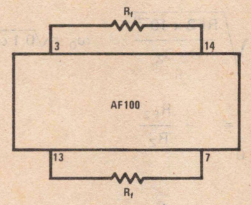

FIGURE 9. Resistive Tuning

GRAPH A. Resistive Tuning

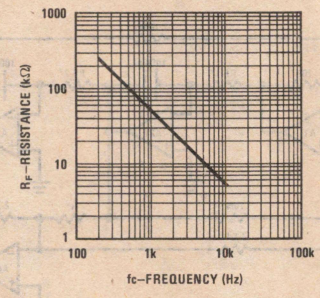

"T" resistive tuning for $f_O < 200$ Hz

$$R_s = \frac{R_t^2}{R_f - 2R_t} \qquad R_t < \frac{R_F}{2}$$

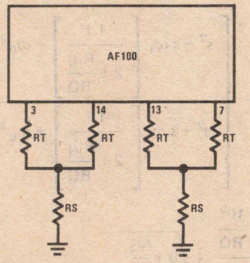

FIGURE 10. T Tuning

GRAPH B. "T" Tuning

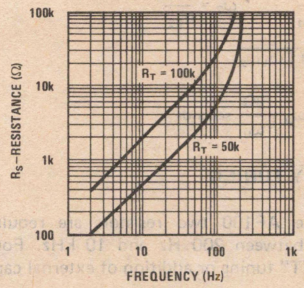

RC tuning for $f_O < 200$ Hz

$$R_f = \frac{0.05033}{f_o\,(C + 1 \times 10^{-9})}$$

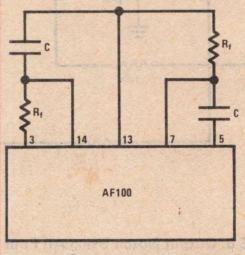

FIGURE 11. Low Frequency RC Tuning

Q TUNING

To tune the Q of an AF100 requires one resistor from pins 1 or 2 to ground. The value of the Q tuning resistor depends on the input connection and input resistance as well as the value of the Q. The Q of the unit is inversely proportional to resistance to ground at pin 1 and directly proportional to resistance to ground from pin 2.

GRAPH C. Q_{MIN}, Non-Inverting Input

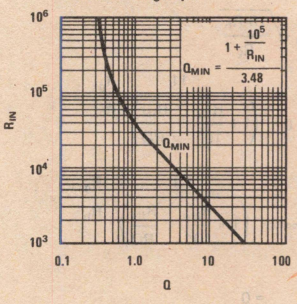

For $Q > Q_{MIN}$ in non-inverting mode:

$$RQ = \frac{10^5}{3.48\,Q - 1 - \frac{10^5}{R_{IN}}}$$

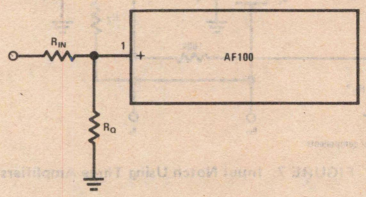

FIGURE 12. Q Tuning for $Q > Q_{MIN}$, Non-Inverting Input

Applications Information (Continued)

GRAPH D. $Q > Q_{MIN}$, Non-Inverting Input

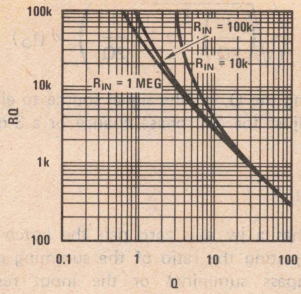

For $Q < Q_{MIN}$ in non-inverting mode:

$$RQ = \frac{10^4}{0.3162 \dfrac{\left(1 + \dfrac{10^5}{R_{IN}}\right)}{Q} - 1.1}$$

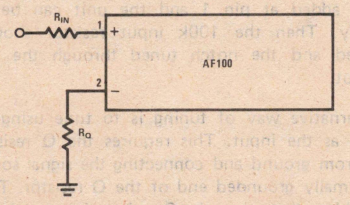

FIGURE 13. Q Tuning for $Q < Q_{MIN}$, Non-Inverting Input

GRAPH E. $Q < Q_{MIN}$, Non-Inverting Input

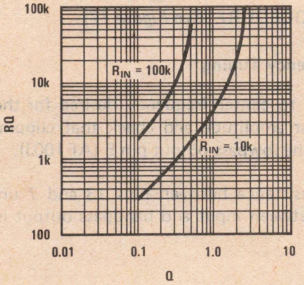

For any Q in inverting mode:

$$RQ = \frac{10^5}{3.16Q \left(1.1 + \dfrac{10^4}{R_{IN}}\right) - 1}$$

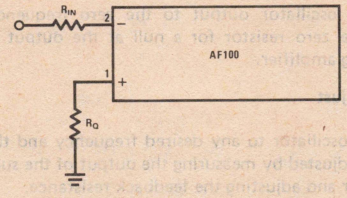

FIGURE 14. Q Tuning Inverting Input

GRAPH F. Q Tuning, Inverting Input

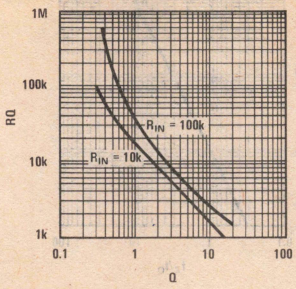

NOTCH TUNING

Two methods to generate notches are the RC input and lowpass/highpass summing. The RC input method requires adding a capacitor and resistor connected to the two integrator inputs. The capacitor connects to "Int 1" and the resistor connects to "Int 2." The output summing requires two resistors connected to the lowpass and highpass output.

For input RC notch tuning:

$$R_Z = \frac{R_F \times 10^{-9}}{C_Z} \left(\frac{f_O}{f_Z}\right)^2$$

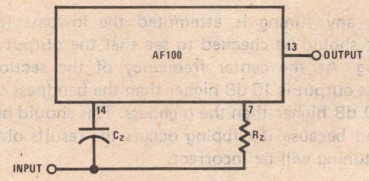

FIGURE 15. Input RC Notch

GRAPH G. Input RC Notch

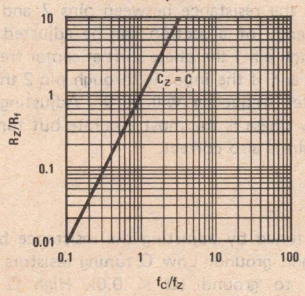

For output notch tuning:

$$R_{HP} = \left(\frac{f_Z}{f_O}\right)^2 \frac{R_{LP}}{10}$$

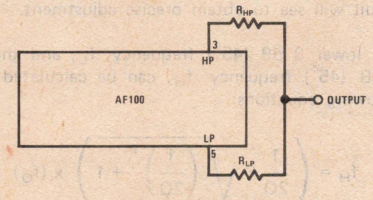

FIGURE 16. Output Notch

Applications Information (Continued)

GRAPH H. Output Notch

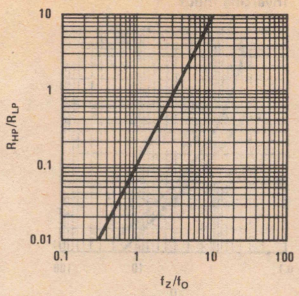

TUNING TIPS

In applications where 2 to 3% accuracy is not sufficient to provide the required filter response, the AF100 stages can be tuned by adding trim pots or trim resistors in series or parallel with one of the frequency determining resistors and the Q determining resistor.

When tuning a filter section, no matter what output configuration is to be used in the circuit, measurements are made between the input and the bandpass (pin 13) output.

Before any tuning is attempted the lowpass (pin 7) output should be checked to see that the output is not clipping. At the center frequency of the section the lowpass output is 10 dB higher than the bandpass output and 20 dB higher than the highpass. This should be kept in mind because if clipping occurs the results obtained when tuning will be incorrect.

Frequency Tuning

By adjusting the resistance between pins 7 and 13 the center frequency of a section can be adjusted. If the input is through pin 1 the phase shift at center frequency will be 180° and if the input is through pin 2 the phase shift at center frequency will be 0°. Adjusting center frequency by phase is the most accurate but tuning for maximum gain is also correct.

"Q" Tuning

The "Q" is tuned by adjusting the resistance between pin 1 or 2 and ground. Low Q tuning resistors will be from pin 2 to ground ($Q < 0.6$). High Q tuning resistors will be from pin 1 to ground. To tune the Q correctly the signal source must have an output impedance very much lower than the input resistance of the filter since the input resistance affects the Q. The input must be driven through the same resistance the circuit will see to obtain precise adjustment.

The lower 3 dB (45°) frequency, f_L, and the upper 3 dB (45°) frequency, f_H, can be calculated by the following equations:

$$f_H = \left(\frac{1}{2Q} + \sqrt{\left(\frac{1}{2Q}\right)^2 + 1}\right) \times (f_O)$$

where f_O = center frequency

$$f_L = \left(\sqrt{\left(\frac{1}{2Q}\right)^2 + 1} - \frac{1}{2Q}\right) \times (f_O)$$

When adjusting the Q, set the signal source to either f_H or f_L and adjust for 45° phase change or a 3 dB gain change.

Notch Tuning

If a circuit has a jw axis zero pair the notch can be tuned by adjusting the ratio of the summing resistors (lowpass/highpass summing) or the input resistance (input RC).

In either case the signal is connected to the input and the proper resistor is adjusted for a null at the output.

Special Cases

When using the input RC notch the unit cannot be tuned through the normal input so an additional 100k resistor can be added at pin 1 and the unit can be tuned normally. Then the 100k input resistor should be grounded and the notch tuned through the normal RC input.

An alternative way of tuning is to tune using the Q resistor as the input. This requires the Q resistor be lifted from ground and connecting the signal source to the normally grounded end of the Q resistor. This has the problem that when the Q resistor is grounded after tuning, its value is decreased by the output impedance of the source. This technique has the advantage of not requiring an additional resistor.

TUNING PROCEDURE (See *Figure 17*)

Center Frequency Tuning

Set oscillator to center frequency desired for the filter section, adjust amplitude and check that clipping does not occur at the lowpass output pin 5 (AF100J).

Adjust the resistance between pins 13 and 7 until the phase shift between input and bandpass output is 180°.

Q Tuning

Set oscillator to upper or lower 45° frequency (see tuning tips) and tune the Q resistor until the phase shift is 135° (upper 45° frequency) or 225° (lower 45° frequency).

Zero Tuning

Set the oscillator output to the zero frequency and tune the zero resistor for a null at the output of the summing amplifier.

Gain Adjust

Set the oscillator to any desired frequency and the gain can be adjusted by measuring the output of the summing amplifier and adjusting the feedback resistance.

Applications Information (Continued)

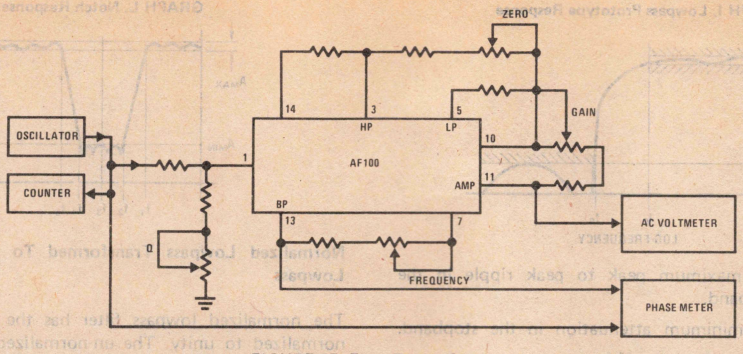

FIGURE 17. Filter Tuning Setup

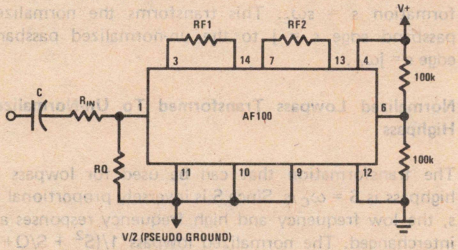

FIGURE 18. Single Power Supply Connection Using Uncommitted Amplifier to Split Supply

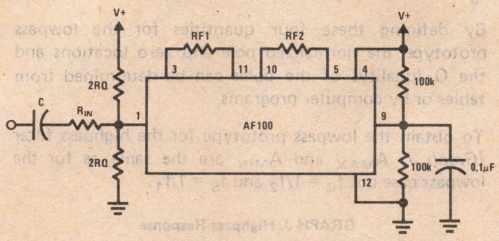

FIGURE 19. Single Power Supply Connection Using Resistive Dividers

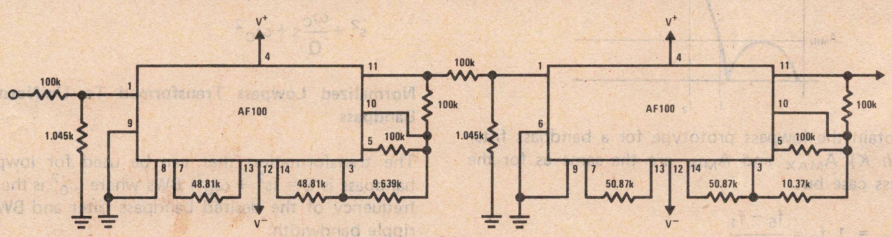

Performance
0.1 dB ripple passband
0.1 dB notch width = 100 Hz
40 dB notch width = 6.25 Hz

4th Order 1010 Hz Notch

STAGE 1

F_C = 1031.1 Hz
Q = 28.34
F_Z = 1012.2 Hz

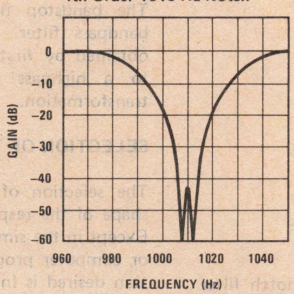

STAGE 2

F_C = 989.3 Hz
Q = 28.34
F_Z = 1007.8 Hz

FIGURE 20. 1010 Hz Notch—Telephone Holding Tone Reject Filter

FILTER DESIGN

Since most filter tables are in terms of a normalized lowpass prototype, the filter to be designed is usually reduced to a lowpass prototype. After the lowpass transfer function is found, it is transformed to obtain the transfer function for the actual filter desired. *Graph I* shows the lowpass amplitude response which can be defined by four quantities.

Applications Information (Continued)

GRAPH I. Lowpass Prototype Response

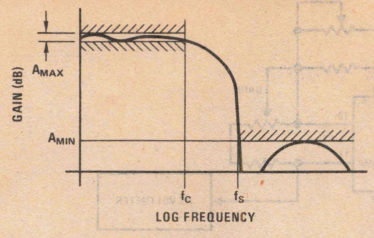

A_{MAX} = the maximum peak to peak ripple in the passband.

A_{MIN} = the minimum attenuation in the stopband.

f_C = the passband cutoff frequency.

f_S = the stopband start frequency.

By defining these four quantities for the lowpass prototype the normalized pole and zero locations and the Q (quality) of the poles can be determined from tables or by computer programs.

To obtain the lowpass prototype for the highpass filter (*Graph J*) A_{MAX} and A_{MIN} are the same as for the lowpass case but $f_C = 1/f_2$ and $f_S = 1/f_1$.

GRAPH J. Highpass Response

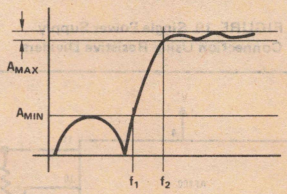

To obtain the lowpass prototype for a bandpass filter (*Graph K*) A_{MAX} and A_{MIN} are the same as for the lowpass case but

$$f_C = 1 \quad f_S = \frac{f_5 - f_1}{f_4 - f_2}$$

where $f_3 = \sqrt{f_1 f_5} = \sqrt{f_2 f_4}$ i.e. geometric symmetry

$f_5 - f_1$ = A_{MIN} bandwidth
$f_4 - f_2$ = Ripple bandwidth

GRAPH K. Bandpass Response

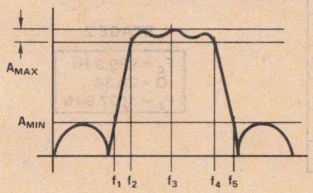

To obtain the lowpass prototype for the notch filter (*Graph L*) A_{MAX} and A_{MIN} are the same as for the lowpass case and

$$f_C = 1 \qquad f_S = \frac{f_5 - f_1}{f_4 - f_2}$$

where $f_3 = \sqrt{f_1 f_5} = \sqrt{f_2 f_4}$

GRAPH L. Notch Response

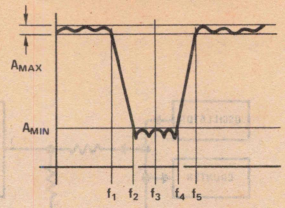

Normalized Lowpass Transformed To Un-Normalized Lowpass

The normalized lowpass filter has the passband edge normalized to unity. The un-normalized lowpass filter instead has the passband edge at f_C. The normalized and un-normalized lowpass filters are related by the transformation $s = s\omega_c$. This transforms the normalized passband edge $s = j$ to the un-normalized passband edge $s = j\omega_C$.

Normalized Lowpass Transformed To Un-Normalized Highpass

The transformation that can be used for lowpass to highpass is $S = \omega_C/s$. Since S is inversely proportional to s, the low frequency and high frequency responses are interchanged. The normalized lowpass $1/(S^2 + S/Q+1)$ transforms to the un-normalized highpass

$$\frac{s^2}{s^2 + \frac{\omega_C}{Q}s + \omega_C{}^2}$$

Normalized Lowpass Transformed To Un-Normalized Bandpass

The transformation that can be used for lowpass to bandpass is $S = (s^2 + \omega_0{}^2)$ BWs where $\omega_0{}^2$ is the center frequency of the desired bandpass filter and BW is the ripple bandwidth.

Normalized Lowpass Transformed To Un-Normalized Bandstop (Or Notch)

The bandstop filter has a reciprocal response to a bandpass filter. Therefore a bandstop filter can be obtained by first transforming the lowpass prototype to a highpass and then performing the bandpass transformation.

SELECTION OF TRANSFER FUNCTION

The selection of a function which approximates the shape of the response desired is a complicated process. Except in the simplest cases it requires the use of tables or computer programs. The form of the transfer function desired is in terms of the pole and zero locations. The most common approximations found in tables are Butterworth, Tschebycheff, Elliptic, and Bessel. The decision as to which approximation to use is usually a function of the requirements and system objectives. Butterworth filters are the simplest but have the disadvantage of requiring high order transfer functions to obtain sharp roll-offs.

Applications Information (Continued)

The Tschebycheff function is a min/max approximation in the passband. This approximation has the property that it is equiripple which means that the error oscillates between maximums and minimums of equal amplitude in the passband. The Tschebycheff approximation, because of its equiripple nature, has a much steeper transition region than the Butterworth approximation.

The elliptic filter, also known as Cauer or Zolotarev filters, are equiripple in the passband and stopband and have a steeper transition region than the Butterworth or the Tschebycheff.

For a specific lowpass filter three quantities can be used to determine the degree of the transfer function: the maximum passband ripple, the minimum stopband attenuation, and the transition ratio ($tr = \omega_S/\omega_C$). Decreasing A_{MAX}, increasing A_{MIN}, or decreasing tr will increase the degree of the transfer function. But for the same requirements the elliptic filter will require the lowest order transfer function. Tables and graphs are available in reference books such as "Reference Data for Radio Engineers," Howard W. Sams & Co., Inc., 5th Edition, 1970 and Erich Christian and Egon Eisenmann, "Filter Design Tables and Graphs," John Wiley and Sons, 1966.

For specific transfer functions and their pole locations such text as Louis Weinberg, "Network Analysis and Synthesis," McGraw Hill Book Company, 1962 and Richard W. Daniels, "Approximation Methods for Electronic Filter Design," McGraw-Hill Book Company, 1974, are available.

DESIGN OF CASCADED MULTISECTION FILTERS

The first step in designing is to define the response required and define the performance specifications:

1. Type of filter:
   Lowpass, highpass, bandpass, notch, allpass
2. Attenuation and frequency response
3. Performance
   Center frequency/corner frequency plus tolerance and stability

   Insertion loss/gain plus tolerance and stability

   Source impedance

   Load impedance

   Maximum output noise

   Power consumption

   Power supply voltage

   Dynamic range

   Maximum output level

Second step is to find the pole and zero location for the transfer function which meet the above requirements. This can be done by using tables and graphs or network synthesis. The form of the transfer function which is easiest to convert to a cascaded filter is a product of first and second order terms in these forms:

First Order	Second Order	
$\dfrac{K}{s+\omega_R}$	$\dfrac{K}{s^2+\dfrac{\omega_0}{Q}s+\omega_0^2}$	(low pass)
$\dfrac{Ks}{s+\omega_R}$	$\dfrac{Ks^2}{s^2+\dfrac{\omega_0}{Q}s+\omega_0^2}$	(highpass)
	$\dfrac{Ks}{s^2+\dfrac{\omega_0}{Q}s+\omega_0^2}$	(bandpass)
	$\dfrac{K(s^2+\omega_Z^2)}{s^2+\dfrac{\omega_0}{Q}s+\omega_0^2}$	(notch)
	$\dfrac{s^2-\dfrac{\omega_0}{Q}s+\omega_0^2}{s^2+\dfrac{\omega_0}{Q}s+\omega_0^2}$	(allpass)

Each of the second order functions is realizable by tuning an AF100 stage. By cascading these stages the desired transfer function is realized.

CASCADING SECOND ORDER STAGES

The primary concern in cascading second order stages is to minimize the maximum difference in amplitude from input to output over the frequencies of interest. A computer program is probably required in very complicated cases but some general rules that can be used that will usually give satisfactory results are:

GRAPH M. Generalized Model Response

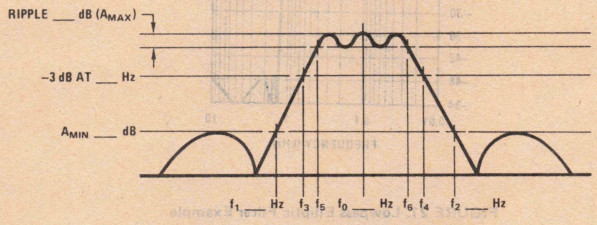

Applications Information (Continued)

1. The highest "Q" pole pair should be paired with the zero pair closest in frequency.
2. If highpass and lowpass stages are cascaded the lowpass sections should be the higher frequency and highpass sections the lower frequency.
3. In cascaded filters of more than two sections the first section should be the section with "Q" closest to 0.707 and then additional stages should be added in order of least difference between first stage Q and their Q.

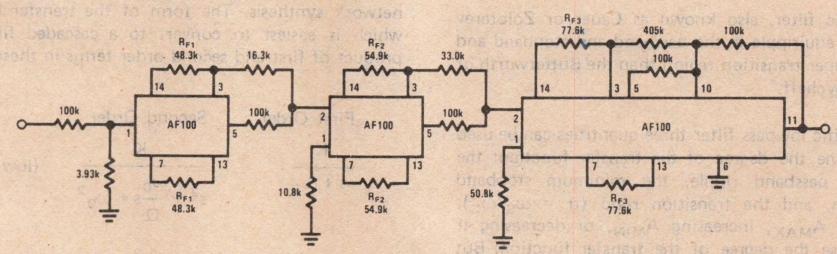

Lowpass Elliptic Filter

$F_C = 1$

$F_S = 1.3$

$A_{MAX} = 0.1$ dB

$A_{MIN} = 40$ dB

$N = 6$

$f_{O1} = 1.0415 \quad Q_1 = 7.88 \quad f_{Z1} = 1.329 \quad f_Z/f_O = 1.28 \quad \left(\frac{f_Z}{f_O}\right)^2 = 1.63$

$f_{O2} = 0.9165 \quad Q_2 = 1.79 \quad f_{Z2} = 1.664 \quad f_Z/f_O = 1.82 \quad \left(\frac{f_Z}{f_O}\right)^2 = 3.30$

$f_{O3} = 0.649 \quad Q_3 = 0.625 \quad f_{Z3} = 4.1285 \quad f_Z/f_O = 6.36 \quad \left(\frac{f_Z}{f_O}\right)^2 = 40.5$

$R_{F1} = \frac{(503.3)}{f_{O1} \times f_C} \times 10^5 \quad R_{F2} = \frac{(503.3)}{f_{O2} \times f_C} \times 10^5 \quad R_{F3} = \frac{(503.3)}{f_{O3} \times f_C}$

at 1000 Hz = f_C

$R_{F1} = 48.3k \quad R_{F2} = 54.9k \quad R_{F3} = 77.6k$

6th Order Elliptic Filter

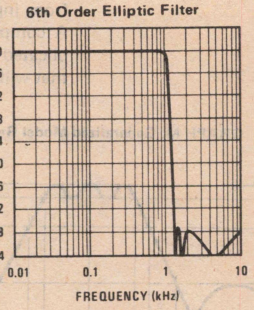

FIGURE 21. Lowpass Elliptic Filter Example

Applications Information (Continued)

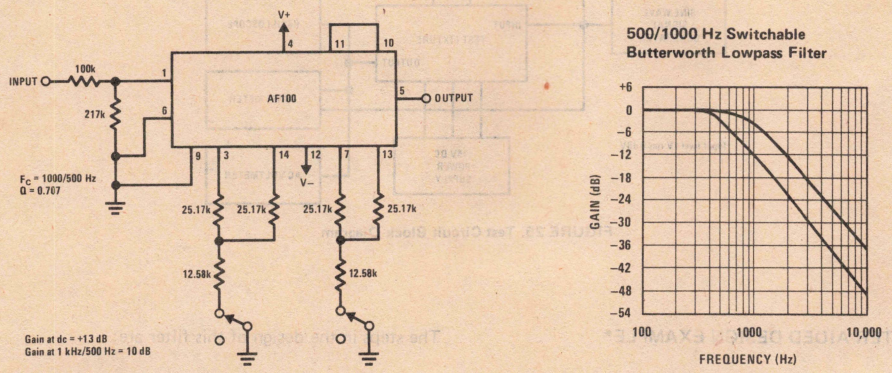

FIGURE 22. Switchable Filter Example: 500 Hz/1000 Hz Butterworth Lowpass

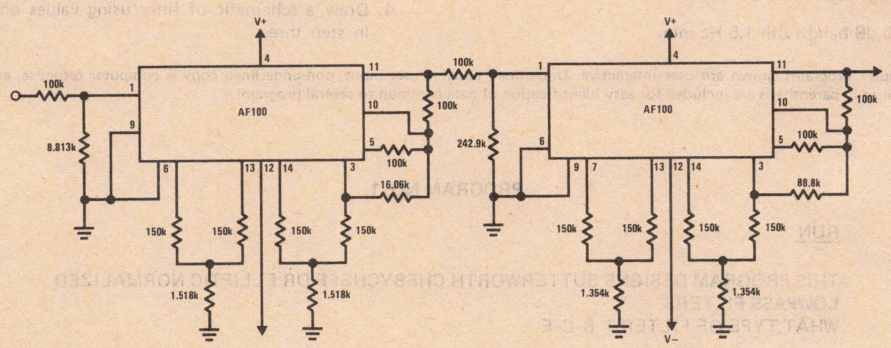

STAGE 1

F_C = 3.328 Hz
Q = 3.84
F_Z = 4.218 Hz

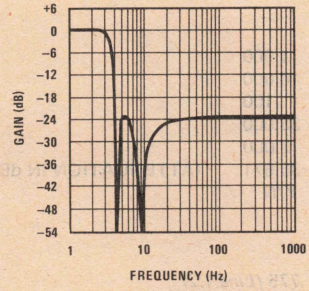

STAGE 2

F_C = 2.975 Hz
Q = 0.693
F_Z = 8.865 Hz

FIGURE 23. EEG Delta Filter—3 Hz Lowpass

Applications Information (Continued)

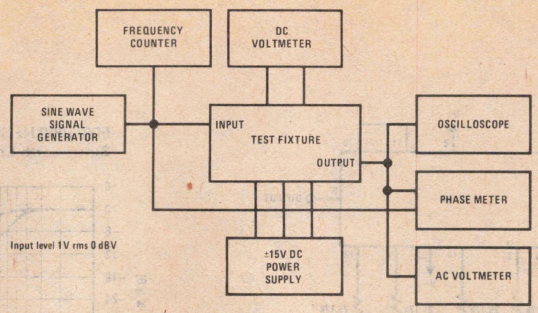

Input level 1V rms 0 dBV

FIGURE 25. Test Circuit Block Diagram

COMPUTER AIDED DESIGN EXAMPLE*

This design is an example of a 60 Hz notch filter. The response is to have the following specifications:

Maximum passband ripple 0.1 dB

Minimum rejection 35 dB

0.1 dB bandwidth 15 Hz max

−35 dB bandwidth 1.5 Hz min

The steps in the design of this filter are:

1. Design a lowpass "prototype" for the filter.
2. Transformation of the lowpass prototype into a notch filter design.
3. Using the pole and zero locations found in step two calculate the value of the resistors required to build the filter.
4. Draw a schematic of filter using values obtained in step three.

*Computer programs shown are user interactive. Underlined copy is user input, non-underlined copy is computer response, and line indications in parenthesis are included for easy identification of data common to several programs.

PROGRAM NO. 1

```
RUN

THIS PROGRAM DESIGNS BUTTERWORTH CHEBYCHEFF OR ELLIPTIC NORMALIZED
LOWPASS FILTERS
WHAT TYPE OF FILTER ? B-C-E

ELLIPTIC
 DO YOU KNOW THE ORDER OF THE FILTER ? Y/N
? NO
INPUT FC,FS,AMAX,AMIN
? 1, 10, .1, 35
     FC              1.000
     FS             10.000
     AMAX             .100
     AMIN           35.000
     N               2.000
     ATT AT FS     -35.671     (ATTENUATION IN dB)
IS THIS SATISFACTORY ? Y/N
? YES

   F                 Q
    1.823 (Line 1.1)      .775 (Line 1.2)
   Z
   14.124 (Line 1.3)
```

Applications Information (Continued)

PROGRAM NO. 2
(DETERMINES UN-NORMALIZED POLE + ZERO LOCATIONS OF FIRST SECTION)
(DATA ENTERED FROM PROGRAM NO. 1)

```
RUN
WHAT TYPE FILTER BANDPASS OR NOTCH
? NOTCH
ENTER #OF POLE PAIRS? 1

ENTER #OF JW AXIS ZEROS? 1

  ENTER #OF REAL POLES? 0

  ENTER #OF ZEROS AT ZERO? 0

  ENTER #OF COMPLEX ZEROS? 0

ENTER #OF REAL ZEROS? 0

   ENTER F & Q OF EACH POLE PAIR
? 1.823, .775  (FROM LINE 1.1 AND LINE 1.2)

ENTER VALUES OF JW AXIS ZEROS
? 14.124  (FROM LINE 1.3)

ENTER FREQUENCY SCALING FACTOR
? 1
  ENTER THE #OF FILTERS TO BE DESIGNED
? 1
  ENTER THE C.F. AND BW OF EACH FILTER
? 60, 15
```

OUTPUT OF PROGRAM NO. 2
TRANSFORMED POLE/ZERO LOCATIONS FIRST SECTION

POLE LOCATIONS

CENTER FREQ.		Q	
56.93601	*(From Line 2.3)*	11.31813	*(From Line 2.4)*
63.228877	*(From Line 2.5)*	11.31813	*(From Line 2.6)*

JW AXIS ZEROS

59.471339	*(From Line 2.1)*
60.533361	*(From Line 22*

PROGRAM NO. 3
(CHECK OF FILTER RESPONSE USING PROGRAM NO. 2 DATA BASE)

```
RUN

NUMERATOR (ZEROS)
A(I)S^2+R(I)S+Z(I)^2
 1     0     59.471339     (From Line 2.1)
 1     0     60.533361     (From Line 2.2)

REAL POLE

COMPLEX POLE PAIRS

          F          Q
1       56.93601   11.31813   (From Lines 2.3 and 2.4)
2       63.228877  11.31813   (From Lines 2.5 and 2.6)
```

RUN

FREQUENCY	NOR. GAIN (DB)	PHASE	DELAY	NOR. DELAY
40.000	.032	347.69	.002275	5.847169
45.000	.060	342.20	.004107	8.749738
50.000	.100	330.70	.009983	21.268142
55.000	−.795	290.54	.046620	99.324027
56.000	−2.298	270.61	.063945	136.234562
57.000	−5.813	245.51	.072894	155.299278
58.000	−12.748	220.19	.065758	140.096912
58.200	−14.740	215.54	.063369	135.006390
58.400	−17.032	211.06	.060979	129.914831
58.600	−19.722	206.76	.058692	125.043324
58.800	−22.983	202.61	.056588	120.561087
59.000	−27.172	198.60	.054724	116.589928
59.200	−33.235	194.72	.053139	113.212012
59.400	−46.300	190.94	.051856	110.478482
59.600	−42.909	7.24	.050888	108.417405
59.800	−36.897	3.60	.050242	107.040235
60.00	−35.567	360.00	.049916	106.346516
60.200	−36.887	356.41	.049907	106.326777
60.400	−42.757	352.81	.050206	106.963750
60.600	−47.102	169.17	.050801	108.232021
60.800	−33.650	165.48	.051677	110.096278
61.000	−27.577	161.72	.052809	112.508334
61.200	−23.418	157.87	.054167	115.403169
61.400	−20.198	153.92	.055712	118.694436
61.600	−17.554	149.85	.057391	122.270086
61.800	−15.308	145.65	.059136	125.989157
62.000	−13.362	141.33	.060869	129.681062
63.000	−6.557	118.23	.065975	140.559984
64.000	−2.936	95.30	.059402	126.556312
65.000	−1.215	76.38	.045424	96.774832
66.000	−.463	62.43	.032614	69.484716
67.000	−.138	52.44	.023498	50.062947
70.000	.091	35.43	.010452	22.267368
75.000	.085	23.44	.004250	9.054574
80.000	.060	17.80	.002310	4.921727
85.000	.043	14.50	.001460	3.110493
90.000	.032	12.31	.001011	2.154297

Applications Information (Continued)

PROGRAM NO. 4

DESIGN OF FIRST SECTION

```
>RUN
WHICH FILTER AF100 -J OR G ?
? J
WHAT TYPE OF FILTER SECTION? HIGHPASS-BANDPASS-LOWPASS-NOTCH-ALLPASS
? NOTCH
INPUT FC AND Q VALUES
? 56.93601, 11.31813   (FROM LINES 2.3 AND 2.4)
INPUT REAL POLE AND CAPACITOR VALUES IF NONE ENTER 0
? 0
INPUT ZERO LOCATION
? 59.471339   (FROM LINE 2.1)
ARE TUNING INSTRUCTIONS REQUIRED ?
? YES
```

TUNING INSTRUCTION

PHASE SHIFT FROM INPUT TO PIN 13 SHOULD BE 180 DEG. AT 56.93601 HZ.
IF TUNING IS REQUIRED, RF2 FROM PINS 7 TO 13 SHOULD BE ADJUSTED.
PHASE SHIFT FROM INPUT TO PIN 13 SHOULD BE 135 DEG. AT 59.506798HZ.
OR 225 DEG. AT 54.476284 HZ.
IF TUNING IS REQUIRED RQ FROM 1 OR 2 TO GROUND SHOULD BE ADJUSTED
GAIN AT PIN 11 AT 59.471339 SHOULD BE 0 IF NOT
ADJUST RHP FROM PIN 3 TO 10 FOR NULL

FC= 56.93601 Q= 11.31813 F(L-3DB) = 54.476284 F(H-3DB) = 59.506798

GAIN AT F)) FC= .00DB

FUNCTION	CONNECTION FROM	TO	VALUE OF EXTERNAL RESISTORS IN OHMS
R IN	INPUT	1	100000.000
RQ	1	GND	2675.931
RF1	3	14	883960.996
RF2	7	13	883960.996
RLP	5	10	100000.000
RHP	3	10	10910.418
RG	10	11	357910.697
+V		4	
−V		12	
GND		9	
GND		6	
OUTPUT	PIN 11		

PROGRAM NO. 4

DESIGN OF SECOND SECTION

WHAT TYPE OF FILTER SECTION? HIGHPASS-BANDPASS-LOWPASS-NOTCH-ALLPASS
? NOTCH
INPUT FC AND Q VALUES
? 63.228877, 11.31813 *(FROM LINES 2.5 AND 2.6)*
INPUT REAL POLE AND CAPACITOR VALUES IF NONE ENTER 0
? 0
INPUT ZERO LOCATION
? 60.533361 *(FROM LINE 2.2)*
ARE TUNING INSTRUCTIONS REQUIRED ?
? YES

TUNING INSTRUCTION

PHASE SHIFT FROM INPUT TO PIN 13 SHOULD BE 180 DEG. AT 63.228877 HZ.
IF TUNING IS REQUIRED RF2 FROM PINS 7 TO 13 SHOULD BE ADJUSTED
PHASE SHIFT FROM INPUT TO PIN 13 SHOULD BE 135 DEG. AT 66.083802 HZ.
OR 225 DEG. AT 60.497289 HZ.
IF TUNING IS REQUIRED RQ FROM 1 OR 2 TO GROUND SHOULD BE ADJUSTED
GAIN AT PIN 11 AT 60.533361 SHOULD BE 0 IF NOT
ADJUST RHP FROM PIN 3 TO 10 FOR NULL

FC= 63.228877 Q= 11.31813 F⟨L-3DB⟩= 60.497289 F⟨H-3DB⟩= 66.083802

GAIN AT F⟨⟨FC= .00DB

FUNCTION	CONNECTION FROM	TO	VALUE OF EXTERNAL RESISTORS IN OHMS
R IN	INPUT	1	100000.000
RQ	1	GND	2675.931
RF1	3	14	795984.596
RF2	7	13	795984.596
RLP	5	10	100000.000
RHP	3	10	9165.552
RG	10	11	328044.920
+V		4	
−V		12	
GND		9	
GND		6	
OUTPUT	PIN 11		

Applications Information (Continued)

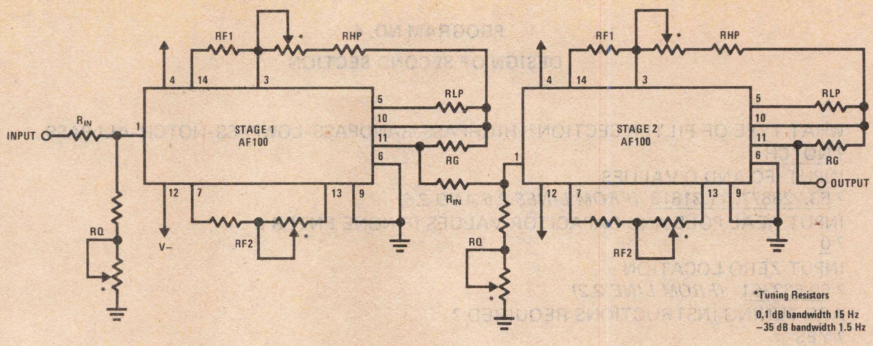

4th Order 60 Hz Notch Filter

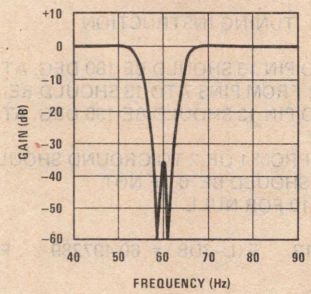

FIGURE 26. Implementation of a 60 Hz Notch From Computer Calculations

DEFINITION OF TERMS

A_{MAX}	Maximum passband peak-to-peak ripple
A_{MIN}	Minimum stopband loss
f_Z	Frequency of jw axis pair
f_O	Frequency of complex pole pair
Q	Quality of pole
f_C	Passband edge
f_S	Stopband edge
A_{HP}	Gain from input to highpass output
A_{BP}	Gain from input to bandpass output
A_{LP}	Gain from input to lowpass output
A_{AMP}	Gain from input to output of amplifier
R_f	Pole frequency determining resistance
R_Z	Zero Frequency determining resistance
R_Q	Pole Quality determining resistance
f_H	Frequency above center frequency at which the gain decreases by 3 dB for a bandpass filter
f_L	Frequency below center frequency at which the gain decreases by 3 dB for a bandpass filter
BW	The bandwidth of a bandpass filter
N	Order of the denominator of a transfer function

BIBLIOGRAPHY:

R. W. Daniels: *"Approximation Methods for Electronic Filter Design,"* McGraw-Hill Book Co., New York, 1974

G. S. Moschytz: *"Linear Integrated Networks Design,"* Van Norstrand Reinhold Co., New York, 1975

E. Christian and E. Eisenmann, *"Filter Design Tables and Graphs,"* John Wiley & Sons, New York, 1966

A. I. Zverev, *"Handbook of Filter Synthesis,"* John Wiley & Sons, New York, 1967

Burr-Brown Research Corp., *"Handbook of Operational Amplifier Design and Applications,"* McGraw-Hill Book Co., New York, 1971

AF150 Universal Wideband Active Filter

General Description

The AF150 wide band active filter is a general second order lumped RC network. Only four external resistors are required to program the AF150 for specific second order functions. Low pass, high pass and band pass functions are available simultaneously at separate outputs. Notch and all pass functions can be formed by summing the outputs with an external amplifier. Higher order filters are realized by cascading AF150 active filters with appropriate programming resistors.

Any of the classical filter configurations, such as Butterworth, Bessel, Cauer and Chebyshev can be formed.

Features

- Independent Q, frequency, gain adjustments
- Low sensitivity to external component variation
- Separate low pass, high pass, band pass outputs
- Inputs may be differential, inverting or non-inverting
- All pass and notch outputs may be formed
- Operates to 100 kHz
- Q range to 500
- Power supply range ±5V to ±18V
- High accuracy ±1% unadjusted
- Q frequency product 2×10^5

Connection Diagram

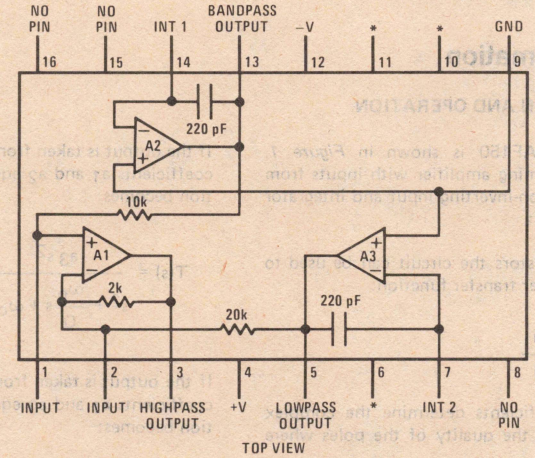

Ceramic Dual-In-Line Package HY13A
AF150-1CJ
AF150-2CJ

***Note:** Internally connected. DO NOT USE.

Absolute Maximum Ratings

Supply Voltage	±18V
Power Dissipation (Note 1)	900 mW/Package (500 mW/Amp)
Differential Input Voltage	±36V
Output Short-Circuit Duration (Note 1)	Infinite
Operating Temperature	−25°C to +85°C
Storage Temperature	−25°C to +100°C
Lead Temperature (Soldering, 10 seconds)	300°C

Electrical Characteristics

Specifications apply for $V_S = \pm 15V$, over −25°C to +85°C unless otherwise specified.

SYMBOL	PARAMETER	CONDITIONS	MIN	TYP	MAX	UNITS
	Frequency Range	$f_c \times Q \leq 2 \times 10^5$			100k	Hz
	Q Range	$f_c \times Q \leq 2 \times 10^5$			500	Hz/Hz
	f_o Accuracy					
	AF150-1J	$f_c \times Q \leq 5 \times 10^4$, $T_A = 25°C$			±2.5	%
	AF150-2J	$f_c \times Q \leq 5 \times 10^4$, $T_A = 25°C$			±1.0	%
$\Delta f_o/\Delta T$	f_o Temperature Coefficient			±50	±150	ppm/°C
	Q Accuracy	$f_c \times Q \leq 5 \times 10^4$, $T_A = 25°C$			±7.5	%
$\Delta Q/\Delta T$	Q Temperature Coefficient			±300	±750	ppm/°C
PSRR	Power Supply Rejection Ratio		80	100		dB
CMRR	Common-Mode Rejection		80	100		dB
I_{os}	Input Offset Current	$T_j = 25°C$		3	50	pA
I_B	Input Bias Current	$T_j = 25°C$		30	200	pA
V_{CM}	Input Common-Mode Voltage Range	$V_S = \pm 15V$	±11	±12		V
I_s	Power Supply Current	$V_S = \pm 15V$, $T_A = 25°C$		15	30	mA

Note 1: Any of the amplifier's outputs can be shorted to ground indefinitely; however, more than one should not be simultaneously shorted as the maximum package power dissipation will be exceeded.

Applications Information

CIRCUIT DESCRIPTION AND OPERATION

A schematic of the AF150 is shown in *Figure 1*. Amplifier A1 is a summing amplifier with inputs from integrator A2 to the non-inverting input and integrator A3 to the inverting input.

By adding external resistors the circuit can be used to generate the second order transfer function:

$$T(s) = \frac{a_3 s^2 + a_2 s + a_1}{s^2 + b_2 s + b_1}$$

The denominator coefficients determine the complex pole pair location and the quality of the poles where

$\omega_o = \sqrt{b_1}$ = the radian center frequency

$Q = \dfrac{\omega_o}{b_2}$ = the quality of the complex pole pair

If the output is taken from the output of A1, numerator coefficients a_1 and a_2 equal zero, and the transfer function becomes:

$$T(s) = \frac{a_3 s^2}{s^2 + \frac{\omega_o}{Q} s + \omega_o^2} \quad \text{(high pass)}$$

If the output is taken from the output of A2, numerator coefficients a_1 and a_3 equal zero and the transfer function becomes:

$$T(s) = \frac{a_2 s}{s^2 + \frac{\omega_o}{Q} s + \omega_o^2} \quad \text{(band pass)}$$

Applications Information (Continued)

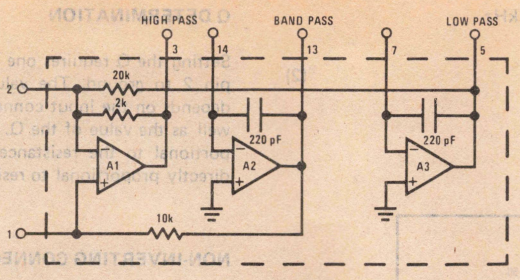

FIGURE 1. AF150 Schematic

If the output is taken from the output of A3, numerator coefficients a_3 and a_2 equal zero and the transfer function becomes:

$$T(s) = \frac{a_1}{s^2 + \frac{\omega_o}{Q} s + \omega_o^2} \qquad \text{(low pass)}$$

Using an external op amp and the proper input and output connections, the circuit can also be used to generate the transfer functions for a notch and all pass filter.

In the transfer function for a notch function a_2 becomes zero, a_1 equals ω_z^2 and a_3 equals 1. The transfer function becomes:

$$T(s) = \frac{s^2 + \omega_z^2}{s^2 + \frac{\omega_o}{Q} s + \omega_o^2} \qquad \text{(notch)}$$

In the all pass transfer function $a_3 = 1$, $a_2 = -\omega_o/Q$ and $a_1 = \omega_o^2$. The transfer function becomes:

$$T(s) = \frac{s^2 - \frac{\omega_o}{Q} s + \omega_o^2}{s^2 + \frac{\omega_o}{Q} s + \omega_o^2} \qquad \text{(all pass)}$$

The relationships between the generalized coefficients and the external resistors will be found in the appendix. It is not, however, necessary to use these theoretical, if not "messy", equations to solve for the proper external resistor values. In general, it is assumed that the user has knowledge of the frequency and Q of the specific filter he is designing. For higher order filters of various types, the reader is directed to any of the available texts on filters (see bibliography) for information and tables concerning the location of the poles and zeros. Once the specifics of the filter are found from the tables, it is simply a matter of cascading the sections with proper attention to some general guidelines which are included later in the application section.

The following discussion gives a step-by-step procedure for designing filters with several examples given for clarity.

FREQUENCY TUNING

Two equal value frequency setting resistors are required for frequencies above 1 kHz. For lower frequencies, T tuning or the addition of external capacitors is required. Using external capacitors allows the user to go as low in frequency as he desires. T tuning and external capacitors can be used together.

Two resistor tuning for 1 kHz to 100 kHz

$$R_f = \frac{228.8 \times 10^6}{f_o}\ \Omega \qquad (1)$$

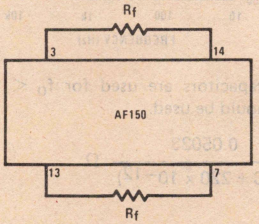

FIGURE 2. Resistive Tuning

GRAPH A. Resistive Tuning

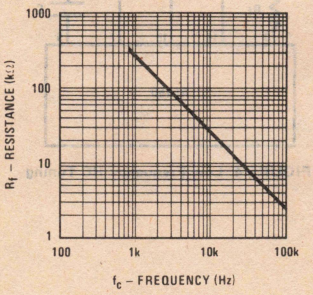

Applications Information (Continued)

T resistive tuning for $f_o < 1$ kHz

$$R_S = \frac{R_T^2}{R_f - 2R_T} \qquad (2)$$

R_f from equation 1.

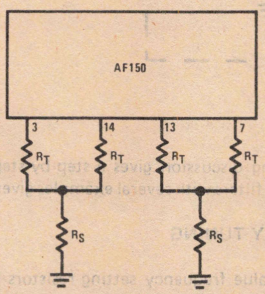

FIGURE 3. T Tuning

GRAPH B. T Tuning

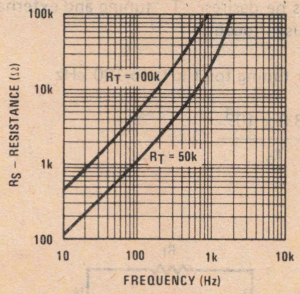

If external capacitors are used for $f_o < 1$ kHz, then equation 3 should be used.

$$R_f = \frac{0.05033}{f_o\,(C + 220 \times 10^{-12})}\ \Omega \qquad (3)$$

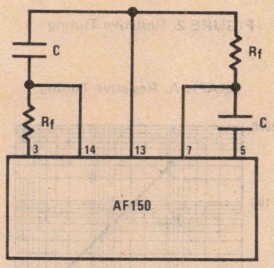

FIGURE 4. Low Frequency RC Tuning

Q DETERMINATION

Setting the Q requires one resistor from either pin 1 or pin 2 to ground. The value of the Q setting resistor depends on the input connection and input resistance as well as the value of the Q. The Q will be inversely proportional to the resistance from pin 1 to ground and directly proportional to resistance from pin 2 to ground.

NON-INVERTING CONNECTION*

To determine the Q resistor, choose a value of input resistor, R_{IN}, *(Figures 5 and 6)* and calculate Q_{MIN} (graph C).

$$Q_{MIN} = \frac{1 + \dfrac{10^4}{R_{IN}}}{3.48}$$

If the Q required in the circuit is greater than Q_{MIN}, use the circuit configuration shown in *Figure 5* and equation 4 to calculate R_Q, the Q resistor. If the Q of the circuit is less than Q_{MIN}, use the circuit configuration shown in *Figure 6* and equation 5.

*The discussion of "non-inverting" and "inverting" has to do with the phase relationship between the input port and the *low pass* output port. Refer to *Figure 1* for other output port phase relationships.

GRAPH C. Q_{MIN}, Non-Inverting Input

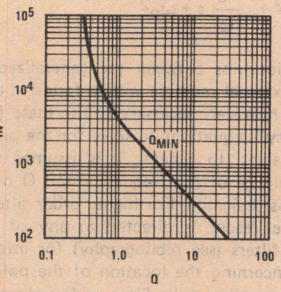

Applications Information (Continued)

For $Q > Q_{MIN}$ in non-inverting mode:

$$R_Q = \frac{10^4}{3.48Q - 1 - \frac{10^4}{R_{IN}}} \ \Omega \qquad (4)$$

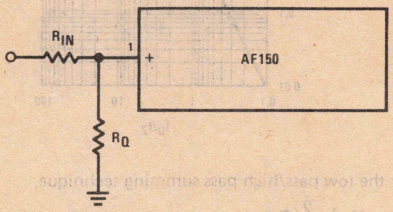

FIGURE 5. Q Tuning for $Q > Q_{MIN}$, Non-Inverting Input

GRAPH D. R_Q for $Q > Q_{MIN}$, Non-Inverting Input

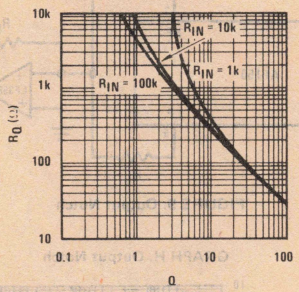

For $Q < Q_{MIN}$ in non-inverting mode:

$$R_Q = \frac{2 \times 10^3}{0.3162 \frac{\left(1 + \frac{10^4}{R_{IN}}\right)}{Q} - 1.1} \ \Omega \qquad (5)$$

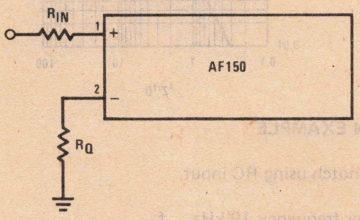

FIGURE 6. Q Tuning for $Q < Q_{MIN}$, Non-Inverting Input

GRAPH E. R_Q for $Q < Q_{MIN}$, Non-Inverting Input

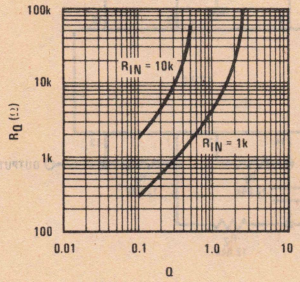

INVERTING CONNECTION*

For any Q in inverting mode:

$$R_Q = \frac{10^4}{3.16Q\left(1.1 + \frac{2 \times 10^3}{R_{IN}}\right) - 1} \ \Omega \qquad (6)$$

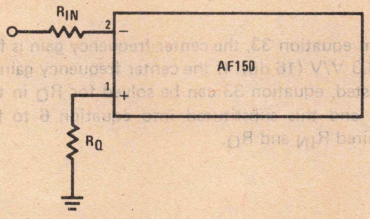

FIGURE 7. Q Tuning, Inverting Input

GRAPH F. Q Tuning, Inverting Input

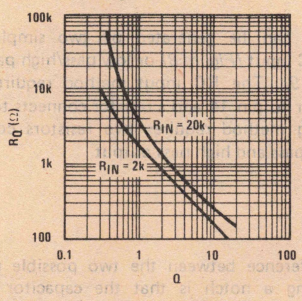

*The discussion of "non-inverting" and "inverting" has to do with the phase relationship between the input port and the *low pass* output port. Refer to *Figure 1* for other output port phase relationships.

DESIGN EXAMPLE

Non-Inverting Band Pass Filter

Center frequency 38 kHz = f_o, 10 Hz/Hz = Q, 10k = R_{IN}.

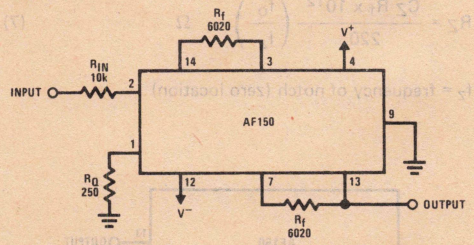

Using equation 1

$$R_f = \frac{228.8 \times 10^6}{f_o} \ \Omega$$

$$R_f = \frac{228.8 \times 10^6}{38 \times 10^3} = 6020\Omega$$

Applications Information (Continued)

Using equation 6

$$R_Q = \frac{10^4}{3.16Q\left(1.1 + \frac{2 \times 10^3}{R_{IN}}\right) - 1}\ \Omega$$

$R_Q = 250\Omega$

From equation 33, the center frequency gain is found to be 6.3 V/V (16 dB). If the center frequency gain is to be adjusted, equation 33 can be solved for R_Q in terms of R_{IN} and this substituted into equation 6 to find the required R_{IN} and R_Q.

NOTCH FILTERS

Notches can be generated by two simple methods: using RC input *(Figure 8)* or low pass/high pass summing *(Figure 9)*. The RC input method requires adding a capacitor to pin 14 and a resistor connects to pin 7. The summing method requires two resistors connected to the low pass and high pass output.

The difference between the two possible methods of generating a notch is that the capacitor connection requires a high quality precision capacitor and the gain of the circuit is difficult to adjust because the gain and zero location are both dependent on C_Z and R_Z. The amplifier summing method requires 3 precision resistors and an external operational amplifier. However, the gain can be adjusted independent of the notch frequency.

For input RC notch tuning:

$$R_Z = \frac{C_Z R_f \times 10^{12}}{220}\left(\frac{f_o}{f_z}\right)^2\ \Omega \qquad (7)$$

f_z = frequency of notch (zero location)

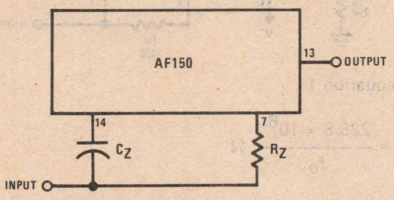

FIGURE 8. Input RC Notch

GRAPH G. Input RC Notch

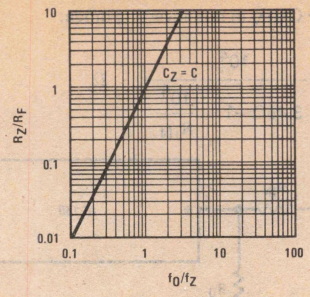

For the low pass/high pass summing technique,

$$R_h = \left(\frac{f_z}{f_o}\right)^2 \frac{R_L}{10} \qquad (8)$$

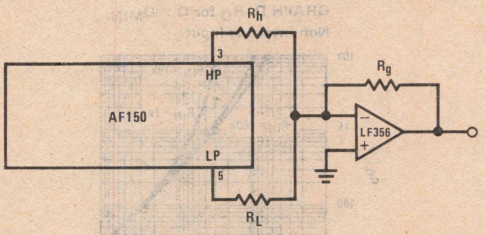

FIGURE 9. Output Notch

GRAPH H. Output Notch

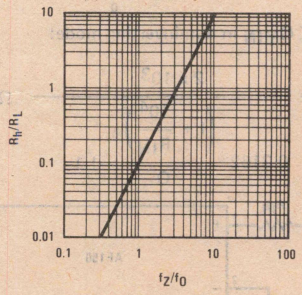

DESIGN EXAMPLE

19 kHz notch using RC input.

Center frequency	19 kHz	f_o
Zero frequency	19 kHz	f_Z
	20	Q

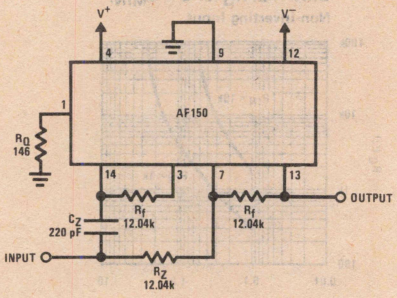

Applications Information

Using equation 1:

$$R_f = \frac{228.8 \times 10^6}{f_o}\ \Omega$$

$R_f = 12{,}040\Omega$

Using equation 4 with $R_{IN} = \infty$:

$$R_Q = \frac{10^4}{3.48Q - 1 - \frac{10^4}{R_{IN}}}\ \Omega$$

$R_Q = 146\Omega$

Using equation 7:

$$R_Z = \left(\frac{C_Z R_F \times 10^{12}}{220}\right)\left(\frac{f_o}{f_z}\right)^2\ \Omega$$

$R_Z = 12{,}040\Omega$

DESIGN EXAMPLE

19 kHz notch using low pass/high pass summing

Center frequency	19 kHz	f_o
Zero frequency	19 kHz	f_Z
	20	Q

Using equation 1:

$$R_f = \frac{228.8 \times 10^6}{f_o}\ \Omega$$

$R_f = 12{,}040\Omega$

Using equation 4, choose $R_{IN} = 10\ k\Omega$:

$$R_Q = \frac{10^4}{3.48Q - 1 - \frac{10^4}{R_{IN}}}\ \Omega$$

$R_Q = 148\Omega$

Using equation 8:

$$R_h = \left(\frac{f_Z}{f_o}\right)^2 \frac{R_L}{10}$$

Choose $R_L = 20k$, then $R_h = 2k$

TRIALS, TRIBULATIONS AND TRICKS

Certainly, there is no substitute for experience when applying active filters, working with op amps or riding a bicycle. However, the following section will discuss some of the finer points in more detail, and hopefully alleviate some of the fears and problems that might be encountered.

TUNING TIPS

In applications where 2 to 3% accuracy is not sufficient to provide the required filter response, the AF150 stages can be tuned by adding trim pots or trim resistors in series or parallel with one of the frequency determining resistors and the Q determining resistor.

When tuning a filter section, no matter what output configuration is to be used in the circuit, measurements are made between the input and the band pass (pin 13) output.

Before any tuning is attempted the low pass (pin 5) output should be checked to see that the output is not clipping. At the center frequency of the section the low pass output is 10 dB higher than the band pass output and 20 dB higher than the high pass. This should be kept in mind because if clipping occurs the results obtained when tuning will be incorrect.

Frequency Tuning

By adjusting the resistance between pins 7 and 13 the center frequency of a section can be adjusted. If the input is through pin 1 the phase shift at center frequency will be 180° and if the input is through pin 2 the phase shift at center frequency will be 0°. Adjusting center frequency by phase is the most accurate but tuning for maximum gain is also correct.

Q Tuning

The Q is tuned by adjusting the resistance between pin 1 or pin 2 and ground. Low Q tuning resistors will be from pin 2 to ground ($Q < 0.6$). High Q tuning resistors will be from pin 1 to ground. To tune the Q correctly, the signal source must have an output impedance very much lower than the input resistance of the filter since

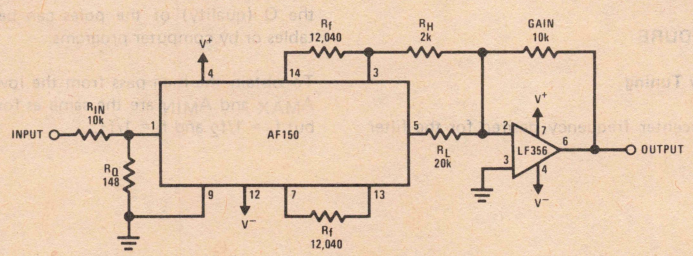

Applications Information (Continued)

the input resistance affects the Q. The input must be driven through the same resistance the circuit will see to obtain precise adjustment.

The lower 3 dB (45°) frequency, f_L, and the upper 3 dB (45°) frequency, f_H, can be calculated by the following equations:

$$f_H = \left(\frac{1}{2Q} + \sqrt{\left(\frac{1}{2Q}\right)^2 + 1} \right) \times (f_o)$$

$$f_L = \left(\sqrt{\left(\frac{1}{2Q}\right)^2 + 1} - \frac{1}{2Q} \right) \times (f_o)$$

where f_o = center frequency

When adjusting the Q, set the signal source to either f_H or f_L and adjust for 45° phase change or a 3 dB gain change.

Notch Tuning

If a circuit has a jw axis zero pair the notch can be tuned by adjusting the ratio of the summing resistors (low pass/high pass summing) or the input resistance (input RC).

In either case the signal is connected to the input and the proper resistor is adjusted for a null at the output.

Special Cases

When using the input RC notch the unit cannot be tuned through the normal input so an additional 100k resistor can be added at pin 1 and the unit can be tuned normally. Then the 100k input resistor should be grounded and the notch tuned through the normal RC input.

An alternative way of tuning is to tune using the Q resistor as the input. This requires the Q resistor be lifted from ground and connecting the signal source to the normally grounded end of the Q resistor. This has the problem that when the Q resistor is grounded after tuning, its value is decreased by the output impedance of the source. This technique has the advantage of not requiring an additional resistor.

TUNING PROCEDURE

Center Frequency Tuning

Set oscillator to center frequency desired for the filter section, adjust amplitude and check that clipping does not occur at the low pass output pin 5.

Adjust the resistance between pins 13 and 7 until the phase shift between input and band pass output is 180°.

Q Tuning

Set oscillator to upper or lower 45° frequency (see tuning tips) and tune the Q resistor until the phase shift is 135° (upper 45° frequency) or 225° (lower 45° frequency).

Zero Tuning

Set the oscillator output to the zero frequency and tune the zero resistor for a null at the output of the summing amplifier.

FILTER DESIGN

Since most filter tables are in terms of a normalized low pass prototype, the filter to be designed is usually reduced to a low pass prototype. After the low pass transfer function is found, it is transformed to obtain the transfer function for the actual filter desired. The low pass amplitude response which can be defined by four quantities, defined below:

Low Pass Response

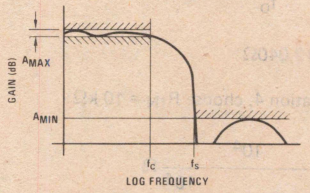

A_{MAX} = the maximum peak-to-peak ripple in the pass band

A_{MIN} = the minimum attenuation in the stop band

f_c = the pass band cutoff frequency

f_s = the stop band start frequency

By defining these four quantities for the low pass prototype the normalized pole and zero locations and the Q (quality) of the poles can be determined from tables or by computer programs.

To obtain the high pass from the low pass filter tables, A_{MAX} and A_{MIN} are the same as for the low pass case, but $f_c = 1/f_2$ and $f_s = 1/f_1$.

Applications Information (Continued)

High Pass Response

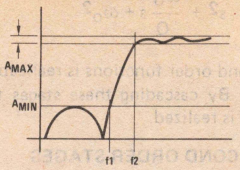

To obtain the band pass from the low pass filter tables, A_{MAX} and A_{MIN} are the same as for the low pass case, but:

$$f_c = 1 \qquad f_s = \frac{f_5 - f_1}{f_4 - f_2}$$

where $f_3 = \sqrt{f_1 \cdot f_5} = \sqrt{f_2 \cdot f_4}$ i.e., geometric symmetry

$f_5 - f_1 = A_{MIN}$ bandwidth
$f_4 - f_2 =$ Ripple bandwidth

Band Pass Response

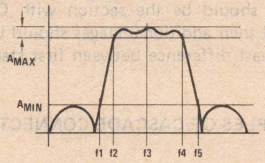

To obtain the notch from the low pass filter tables, A_{MAX} and A_{MIN} are the same as for the low pass case and

$$f_c = 1, \quad f_s = \frac{f_5 - f_1}{f_4 - f_2}$$

where $f_3 = \sqrt{f_1 \cdot f_5} = \sqrt{f_2 \cdot f_4}$

Notch Response

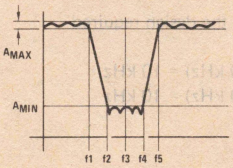

Normalized Low Pass Transformed to Un-Normalized Low Pass

The normalized low pass filter has the pass band edge normalized to unity. The un-normalized low pass filter instead has the pass band edge at f_c. The normalized and un-normalized low pass filters are related by the transformation $s = s\omega_c$. This transforms the normalized pass band edge $s = j$ to the un-normalized pass band edge $s = j\omega_c$.

Normalized Low Pass Transformed to Un-Normalized High Pass

The transformation that can be used for low pass to high pass is $S = \omega_c/s$. Since S is inversely proportional to s, the low frequency and high frequency responses are interchanged. The normalized low pass $1/(S^2 + S/Q + 1)$ transforms to the un-normalized high pass:

$$\frac{s^2}{s^2 + \frac{\omega_c}{Q} s + \omega_c^2}$$

Normalized Low Pass Transformed to Un-Normalized Band Pass

The transformation that can be used for low pass to band pass is:

$$S = \frac{s^2 + \omega_o^2}{BW \cdot s}$$

where ω_o^2 is the center frequency of the desired band pass filter and BW is the ripple bandwidth.

Normalized Low Pass Transformed to Un-Normalized Band Stop (Or Notch)

The bandstop filter has a reciprocal response to a band pass filter. Therefore, a bandstop filter can be obtained by first transforming the low pass prototype to a high pass and then performing the band pass transformation.

SELECTION OF TRANSFER FUNCTION

The selection of a function which approximates the shape of the response desired is a complicated process. Except in the simplest cases, it requires the use of tables or computer programs. The form of the transfer function desired is in terms of the pole and zero locations. The most common approximations found in tables are Butterworth, Chebychev, Elliptic and Bessel. The decision as to which approximation to use is usually a function of the requirements and system objectives. Butterworth filters are the simplest but have the disadvantage of requiring high order transfer functions to obtain sharp roll-offs.

The Chebychev function is a min/max approximation in the pass band. This approximation has the property that it is equiripple which means that the error oscillates between maximums and minimums of equal amplitude in the pass band. The Chebychev approximation, because of its equiripple nature, has a much steeper transition region than the Butterworth approximation.

The elliptic filter, also known as Cauer or Zolotarev filters, are equiripple in the pass band and stop band and have a steeper transition region than the Butterworth or the Chebychev.

For a specific low pass filter three quantities can be used to determine the degree of the transfer function: the maximum pass band ripple, the minimum stop band attenuation, and the transition ratio ($tr = \omega_s/\omega_c$). Decreasing A_{MAX}, increasing A_{MIN}, or decreasing tr will increase the degree of the transfer function. But for

Applications Information (Continued)

the same requirements the elliptic filter will require the lowest order transfer function. Tables and graphs are available in reference books such as "Reference Data for Radio Engineers", Howard W. Sams & Co., Inc., 5th Edition, 1970 and Erich Christian and Egon Eisenmann, "Filter Design Tables and Graphs", John Wiley and Sons, 1966.

For specific transfer functions and their pole locations such text as Louis Weinberg, "Network Analysis and Synthesis", McGraw Hill Book Company, 1962 and Richard W. Daniels, "Approximation Methods for Electronic Filter Design", McGraw-Hill Book Company, 1974, are available.

DESIGN OF CASCADED MULTISECTION FILTERS

The first step in designing is to define the response required and define the performance specifications:

1. Type of filter:
   Low pass, high pass, band pass, notch, all pass
2. Attenuation and frequency response
3. Performance
   Center frequency/corner frequency plus tolerance and stability
   Insertion loss/gain plus tolerance and stability
   Source impedance
   Load impedance
   Maximum output noise
   Power consumption
   Power supply voltage
   Dynamic range
   Maximum output level

Second step is to find the pole and zero location for the transfer function which meet the above requirements. This can be done by using tables and graphs or network synthesis. The form of the transfer function which is easiest to convert to a cascaded filter is a product of first and second order terms in these forms:

First Order	Second Order	
$\dfrac{K}{s+\omega_r}$	$\dfrac{K}{s^2+\dfrac{\omega_o}{Q}s+\omega_o^2}$	(low pass)
$\dfrac{Ks}{s+\omega_r}$	$\dfrac{Ks^2}{s^2+\dfrac{\omega_o}{Q}s+\omega_o^2}$	(high pass)
	$\dfrac{Ks}{s^2+\dfrac{\omega_o}{Q}s+\omega_o^2}$	(band pass)
	$\dfrac{K(s^2+\omega_z^2)}{s^2+\dfrac{\omega_o}{Q}s+\omega_o^2}$	(notch)
	$\dfrac{s^2-\dfrac{\omega_o}{Q}s+\omega_o^2}{s^2+\dfrac{\omega_o}{Q}s+\omega_o^2}$	(all pass)

Each of the second order functions is realizable by using an AF150 stage. By cascading these stages the desired transfer function is realized.

CASCADING SECOND ORDER STAGES

The primary concern in cascading second order stages is to minimize the difference in amplitude from input to output over the frequencies of interest. A computer program is probably required in very complicated cases but some general rules that can be used that will usually give satisfactory results are:

1. The highest Q pole pair should be paired with the zero pair closest in frequency.
2. If high pass and low pass stages are cascaded, the low pass sections should be the higher frequency and high pass sections the lower frequency.
3. In cascaded filters of more than two sections, the first section should be the section with Q closest to 0.707 and then additional stages should be added in order of least difference between first stage Q and their Q.

DESIGN EXAMPLES OF CASCADE CONNECTIONS

Example 1.

Consider a 4th order Butterworth low pass filter with a 10 kHz cutoff (−3 dB) frequency and input impedance $\geq 30\ k\Omega$.

From tables, the normalized filter parameters are:

F1 = 1.0 Q1 = 0.541
F2 = 1.0 Q2 = 1.306

Thus, relative to the design required

F1 = (1.0)(10 kHz) = 10 kHz
F2 = (1.0)(10 kHz) = 10 kHz

Section 1

F = 10 kHz, Q = 1.306

$$R_f = \frac{228.8 \times 10^6}{f_o}\ \Omega \qquad \text{(Using equation 1)}$$

$R_f = 22{,}880\Omega$

Select input resistor 31.6 kΩ

$$Q_{MIN} = \frac{1+\dfrac{10^4}{R_{IN}}}{3.48}$$

$Q_{MIN} = 0.378$

Applications Information (Continued)

Thus, $Q > Q_{MIN}$

Therefore:

$$R_Q = \frac{10^4}{3.48Q - 1 - \frac{10^4}{R_{IN}}}\ \Omega \qquad \text{(Using equation 4)}$$

$R_Q = 3097\Omega$

First Stage

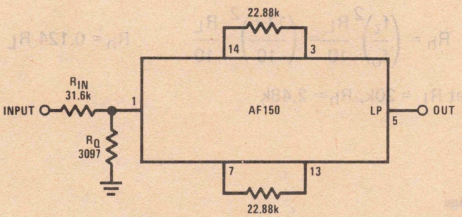

Section 2

$f_o = 10k$, $Q = 0.541$

Since f_o is the same as for the first section:

$R_f = 22.88\ k\Omega$

Select $R_{IN} = 31.6\ k\Omega$

$$R_Q = \frac{10^4}{3.48Q - 1 - \frac{10^4}{R_{IN}}}\ \Omega \qquad \text{(Using equation 4)}$$

$R_Q = 17{,}661\Omega$

Complete Filter, Example 1

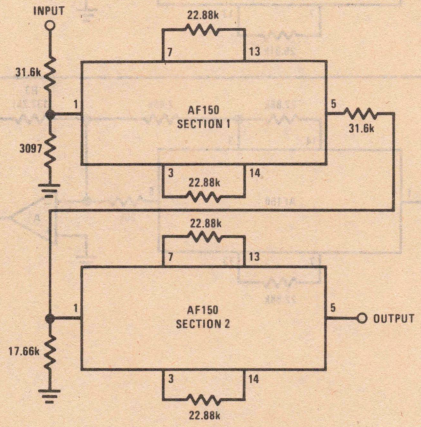

Example 2.

Consider the design of a low pass filter with the following performance:

$f_c = 10$ kHz
$f_s = 11$ kHz
$A_{MAX} = 1$ dB
$A_{MIN} = 40$ dB

It is found that a 6th order elliptic filter will satisfy the above requirements. The parameters of the design are:

STAGE	f_o (kHz)	Q	f_z (kHz)
1	5.16	0.82	29.71
2	8.83	3.72	13.09
3	10.0	20.89	11.15

Stage 1

a) From equation 1, R_F is found to be 44.34k
b) From equation 4, R_Q is found to be 11.72k, assuming R_{IN} (arbitrary) is 10 kΩ.

To create the transmission zero, f_z, at 29.71 kHz, use equation 8.

$$R_h = \left(\frac{f_z}{f_o}\right)^2 \frac{R_L}{10}, \text{ or } R_h = \left(\frac{29.71}{5.16}\right)^2 \frac{R_L}{10}$$

Thus,

$R_h = 3.315\ R_L$

If R_L is arbitrarily chosen as 10 kΩ, R_h = 33.15k.

Thus, the design of the first stage is:

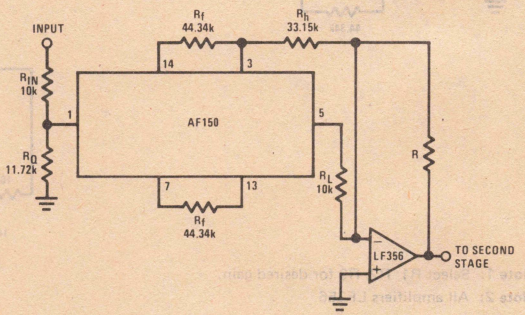

where the feedback resistor, R, around the external op amp may be used to adjust the gain.

Applications Information (Continued)

Stage 2

The second stage design follows exactly the same procedure as the first stage design. The results are:

a) From equation 1, $R_f = 25.91k$
b) From equation 4, $R_Q = 913.6\Omega$, again assuming R_{IN} is arbitrarily 10k.

c) $R_h = \left(\frac{13.09}{8.83}\right)^2 \frac{R_L}{10}$ or $R_h = 0.22\ R_L$

Selecting $R_L = 10k$, then $R_h = 2.2k$, the second stage design is shown below.

Stage 3

The third stage design, again, is identical to the first 2 stages and the results are (for $R_{IN} = 10k$):

$$R_f = \frac{228.8 \times 10^6}{f_o} = 22.88k$$

$$R_Q = \frac{10^4}{3.48Q - 1 - \frac{10^4}{R_{IN}}} = 141.4\Omega$$

$$R_h = \left(\frac{f_z}{f_o}\right)^2 \frac{R_L}{10} = \left(\frac{11.5}{10}\right)^2 \frac{R_L}{10} \qquad R_h = 0.124\ R_L$$

Let $R_L = 20k$, $R_h = 2.48k$

Second Stage

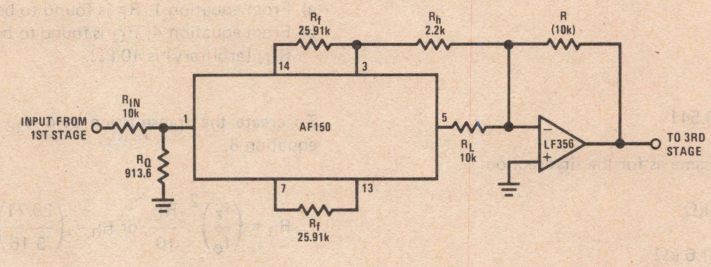

Filter for Example 2

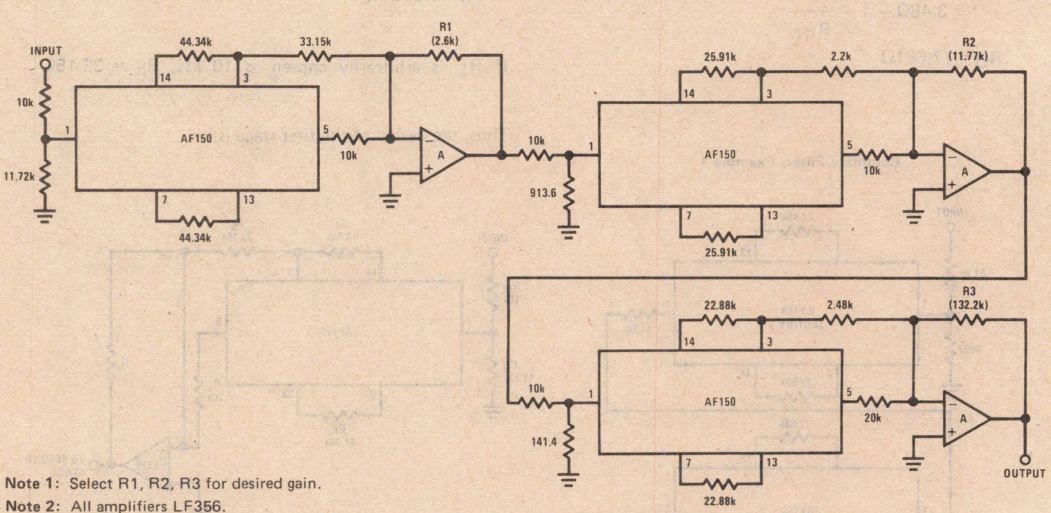

Note 1: Select R1, R2, R3 for desired gain.
Note 2: All amplifiers LF356.

Applications Information (Continued)

From equation 13, the DC gain of the first section is

$$A_{V1} = \frac{11}{1 + \frac{R_{IN}}{10^4} + \frac{R_{IN}}{R_Q}}$$

$$A_{V1} = \frac{11}{1 + \frac{10^4}{10^4} + \frac{10^4}{11.72 \times 10^3}} = 3.86 \text{ V/V}$$

Similarly, the DC gain of the second and third sections are:

$A_{V2} = 0.850$
$A_{V3} = 0.151$

Therefore, the overall DC gain is 0.495 and can be adjusted by selecting R1 with respect to 10k, R2 with respect to 10k or R3 with respect to 20k.

For convenience, a standard resistor value table is given below.

Standard Resistance Values are obtained from the Decade Table by multiplying by multiples of 10. As an example, 1.33 can represent 1.33Ω, 133Ω, 1.33 kΩ, 13.3 kΩ, 133 kΩ, 1.33 MΩ.

Standard 5% and 2% Resistance Values

OHMS	OHMS	OHMS	OHMS	OHMS	OHMS	OHMS	OHMS	OHMS	OHMS	OHMS	MEGOHMS	
10	27	68	180	470	1,200	3,300	8,200	22,000	56,000	150,000	0.24	0.62
11	30	75	200	510	1,300	3,600	9,100	24,000	62,000	160,000	0.27	0.68
12	33	82	220	560	1,500	3,900	10,000	27,000	68,000	180,000	0.30	0.75
13	36	91	240	620	1,600	4,300	11,000	30,000	75,000	200,000	0.33	0.82
15	39	100	270	680	1,800	4,700	12,000	33,000	82,000	220,000	0.36	0.91
16	43	110	300	750	2,000	5,100	13,000	36,000	91,000		0.39	1.0
18	47	120	330	820	2,200	5,600	15,000	39,000	100,000		0.43	1.1
20	51	130	360	910	2,400	6,200	16,000	43,000	110,000		0.47	1.2
22	56	150	390	1,000	2,700	6,800	18,000	47,000	120,000		0.51	1.3
24	62	160	430	1,100	3,000	7,500	20,000	51,000	130,000		0.56	1.5

Decade Table Determining 1/2% and 1% Standard Resistance Values

1.00	1.21	1.47	1.78	2.15	2.61	3.16	3.83	4.64	5.62	6.81	8.25
1.02	1.24	1.50	1.82	2.21	2.67	3.24	3.92	4.75	5.76	6.98	8.45
1.05	1.27	1.54	1.87	2.26	2.74	3.32	4.02	4.87	5.90	7.15	8.66
1.07	1.30	1.58	1.91	2.32	2.80	3.40	4.12	4.99	6.04	7.32	8.87
1.10	1.33	1.62	1.96	2.37	2.87	3.48	4.22	5.11	6.19	7.50	9.09
1.13	1.37	1.65	2.00	2.43	2.94	3.57	4.32	5.23	6.34	7.68	9.31
1.15	1.40	1.69	2.05	2.49	3.01	3.65	4.42	5.36	6.49	7.87	9.53
1.18	1.43	1.74	2.10	2.55	3.09	3.74	4.53	5.49	6.65	8.06	9.76

Appendix (See footnote)

The specific transfer functions for some of the most useful circuit configurations using the AF150 are illustrated in *Figures 10 through 16*. Also included are the gain equations for each transfer function in the frequency band of interest, the Q equation, center frequency equation and the Q determining resistor equation. Q_{MIN} is a function of R_{IN} (see graph C).

a) Non-inverting input *(Figure 10)* transfer equations are:

$$\frac{e_h}{e_{IN}} = \frac{s^2\left[\dfrac{1.1}{1+\dfrac{R_{IN}}{10^4}+\dfrac{R_{IN}}{R_Q}}\right]}{\Delta} \text{ (high pass)} \quad (9)$$

$$\frac{e_b}{e_{IN}} = \frac{-s\,\omega_1\left[\dfrac{1.1}{1+\dfrac{R_{IN}}{10^4}+\dfrac{R_{IN}}{R_Q}}\right]}{\Delta} \text{ (band pass)} \quad (10)$$

$$\frac{e_\ell}{e_{IN}} = \frac{\omega_1\omega_2\left[\dfrac{1.1}{1+\dfrac{R_{IN}}{10^4}+\dfrac{R_{IN}}{R_Q}}\right]}{\Delta} \text{ (low pass)} \quad (11)$$

where

$$\Delta = s^2 + s\left[\frac{1.1}{1+\dfrac{10^4}{R_Q}+\dfrac{10^4}{R_{IN}}}\right]\omega_1 + 0.1\,\omega_1\omega_2 \quad (12)$$

$$\left.\frac{e_\ell}{e_{IN}}\right|_{s\to 0} = \frac{11}{\left(1+\dfrac{R_{IN}}{10^4}+\dfrac{R_{IN}}{R_Q}\right)} \text{ (DC Gain)} \quad (13)$$

$$\left.\frac{e_h}{e_{IN}}\right|_{s\to\infty} = \frac{1.1}{\left(1+\dfrac{R_{IN}}{10^4}+\dfrac{R_{IN}}{R_Q}\right)} \text{ (High Freq. Gain)} \quad (14)$$

$$\left.\frac{e_b}{e_{IN}}\right|_{\omega=\omega_0} = -\frac{\left(1+\dfrac{10^4}{R_Q}+\dfrac{10^4}{R_{IN}}\right)}{\left(1+\dfrac{R_{IN}}{10^4}+\dfrac{R_{IN}}{R_Q}\right)} \text{ (Center Freq. Gain)} \quad (15)$$

$$\omega_1 = \frac{10^{12}}{R_{f1}\cdot 220} \qquad \omega_2 = \frac{10^{12}}{R_{f2}\cdot 220}$$

where

$$\omega_0 = \sqrt{0.1\,\omega_1\omega_2}\text{, (see footnote)}$$

$$Q = \left(\frac{1+\dfrac{10^4}{R_{IN}}+\dfrac{10^4}{R_Q}}{1.1}\right)\sqrt{0.1\left(\frac{\omega_2}{\omega_1}\right)} \quad (16)$$

$$R_Q = \frac{10^4}{\left(\dfrac{1.1Q}{\sqrt{0.1\dfrac{\omega_2}{\omega_1}}}\right) - 1 - \dfrac{10^4}{R_{IN}}} \quad (17)$$

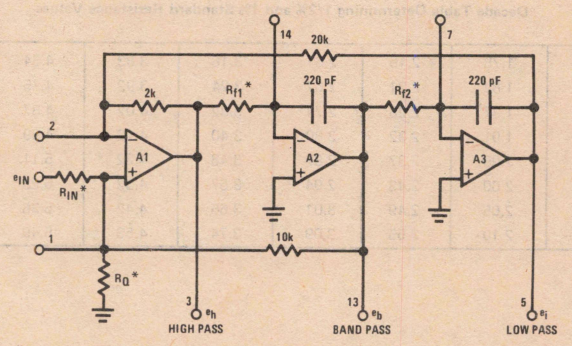

*External components

FIGURE 10. Non-Inverting Input ($Q > Q_{MIN}$)

FOOTNOTE:

It should be noted that in the text of this paper, ω_1 and ω_2 have been assumed equal, and hence $R_{f1} = R_{f2}$. No generality is lost in this assumption and it facilitates the design. However, for completeness, the equations given are exact.

Appendix (Continued)

b) Non-inverting input *(Figure 11)* transfer equations are:

$$\frac{e_h}{e_{IN}} = \frac{s^2 \left[\dfrac{1.1 + \dfrac{2 \times 10^3}{R_Q}}{1 + \dfrac{R_{IN}}{10^4}} \right]}{\Delta} \quad \text{(high pass)} \qquad (18)$$

$$\frac{e_b}{e_{IN}} = \frac{-s\,\omega_1 \left[\dfrac{1.1 + \dfrac{2 \times 10^3}{R_Q}}{1 + \dfrac{R_{IN}}{10^4}} \right]}{\Delta} \quad \text{(band pass)} \qquad (19)$$

$$\frac{e_\ell}{e_{IN}} = \frac{\omega_1\omega_2 \left[\dfrac{1.1 + \dfrac{2 \times 10^3}{R_Q}}{1 + \dfrac{R_{IN}}{10^4}} \right]}{\Delta} \quad \text{(low pass)} \qquad (20)$$

where

$$\Delta = s^2 + s\,\omega_1 \left[\frac{1.1 + \dfrac{2 \times 10^3}{R_Q}}{1 + \dfrac{10^4}{R_{IN}}} \right] + 0.1\,\omega_1\omega_2 \qquad (21)$$

$$\left.\frac{e_\ell}{e_{IN}}\right|_{s \to 0} = \frac{1.1 + \dfrac{2 \times 10^3}{R_Q}}{0.1\left(1 + \dfrac{R_{IN}}{10^4}\right)} \qquad (22)$$

$$\left.\frac{e_h}{e_{IN}}\right|_{s \to \infty} = \frac{1.1 + \dfrac{2 \times 10^3}{R_Q}}{1 + \dfrac{R_{IN}}{10^4}} \qquad (23)$$

$$\left.\frac{e_b}{e_{IN}}\right|_{\omega = \omega_o} = -\frac{1 + \dfrac{10^4}{R_{IN}}}{1 + \dfrac{R_{IN}}{10^4}} \qquad (24)$$

$$\omega_1 = \frac{10^{12}}{R_{f1} \cdot 220}, \quad \omega_2 = \frac{10^{12}}{R_{f2} \cdot 220}$$

$$\omega_0 = \sqrt{0.1\,\omega_1\omega_2}$$

$$Q = \left[\frac{1 + \dfrac{10^4}{R_{IN}}}{1.1 + \dfrac{2 \times 10^3}{R_Q}} \right] \sqrt{0.1\,\frac{\omega_2}{\omega_1}} \qquad (25)$$

$$R_Q = \frac{2 \times 10^7}{\left(1 + \dfrac{10^4}{R_{IN}}\right)\left(\dfrac{\sqrt{0.1\,\dfrac{\omega_2}{\omega_1}}}{Q}\right) - 1.1} \qquad (26)$$

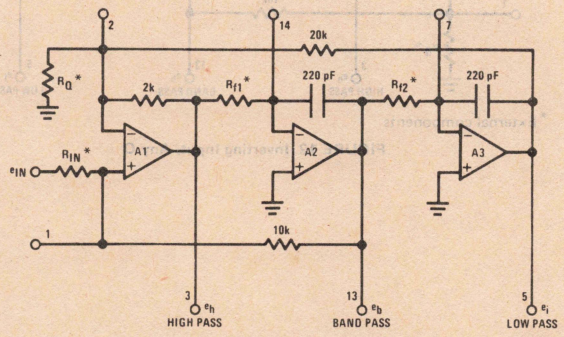

*External components

FIGURE 11. Non-Inverting Input ($Q < Q_{MIN}$)

Appendix (Continued)

c) Inverting input *(Figure 12)* transfer function equations are:

$$\frac{e_h}{e_{IN}} = \frac{-s^2\left(\frac{2 \times 10^3}{R_{IN}}\right)}{\Delta} \quad \text{(high pass)} \qquad (27)$$

$$\frac{e_b}{e_{IN}} = \frac{s\,\omega_1\left(\frac{2 \times 10^3}{R_{IN}}\right)}{\Delta} \quad \text{(band pass)} \qquad (28)$$

$$\frac{e_\ell}{e_{IN}} = \frac{-\omega_1\omega_2\left(\frac{2 \times 10^3}{R_{IN}}\right)}{\Delta} \quad \text{(low pass)} \qquad (29)$$

$$\omega_1 = \frac{10^{12}}{R_{f1} \cdot 220}, \quad \omega_2 = \frac{10^{12}}{R_{f2} \cdot 220}$$

where

$$\Delta = s^2 + s\,\omega_1 \left[\frac{1.1 + \frac{2 \times 10^3}{R_{IN}}}{1 + \frac{10^4}{R_Q}}\right] + 0.1\,\omega_1\,\omega_2 \qquad (30)$$

$$\left.\frac{e_\ell}{e_{IN}}\right|_{s \to 0} = \frac{2 \times 10^4}{R_{IN}} \quad \text{(low pass) (DC gain)} \qquad (31)$$

$$\left.\frac{e_h}{e_{IN}}\right|_{s \to \infty} = -\frac{2 \times 10^3}{R_{IN}} \quad \text{(high pass) (high freq. gain)} \qquad (32)$$

$$\left.\frac{e_b}{e_{IN}}\right|_{\omega = \omega_0} = \frac{\frac{2 \times 10^3}{R_{IN}}\left(1 + \frac{10^4}{R_Q}\right)}{1.1 + \frac{2 \times 10^3}{R_{IN}}} \quad \text{(band pass) (center freq. gain)} \qquad (33)$$

$$\omega_0 = \sqrt{0.1\,\omega_1\,\omega_2}$$

$$Q = \left[\frac{1 + \frac{10^4}{R_Q}}{1.1 + \frac{10^4}{R_{IN}}}\right] \sqrt{0.1\,\frac{\omega_2}{\omega_1}} \qquad (34)$$

$$R_Q = \frac{10^4}{\frac{Q}{\sqrt{0.1\,\frac{\omega_2}{\omega_1}}}\left(1.1 + \frac{2 \times 10^3}{R_{IN}}\right) - 1} \qquad (35)$$

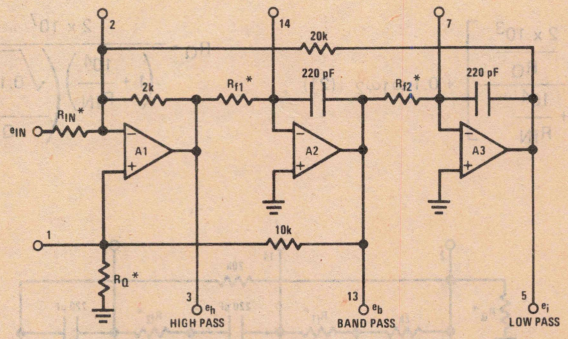

*External components

FIGURE 12. Inverting Input, Any Q

Appendix (Continued)

d) Differential input *(Figure 13)* transfer function equations are:

$$\frac{e_h}{e_{IN}} = \frac{s^2\left(\frac{2 \times 10^3}{R_{IN2}}\right)}{\Delta} \quad \text{(high pass)} \qquad (36)$$

$$\frac{e_b}{e_{IN}} = \frac{-s\,\omega_1\left(\frac{2 \times 10^3}{R_{IN2}}\right)}{\Delta} \quad \text{(band pass)} \qquad (37)$$

$$\frac{e_\ell}{e_{IN}} = \frac{\omega_1\omega_2\left(\frac{2 \times 10^3}{R_{IN2}}\right)}{\Delta} \quad \text{(low pass)} \qquad (38)$$

$$\omega_1 = \frac{10^{12}}{R_{f1} \cdot 220}, \quad \omega_2 = \frac{10^{12}}{R_{f2} \cdot 220}$$

where

$$\Delta = s^2 + s\,\omega_1 \left[\frac{1.1 + \frac{2 \times 10^3}{R_{IN2}}}{1 + \frac{10^4}{R_Q} + \frac{10^4}{R_{IN1}}}\right] + 0.1\,\omega_1\omega_2 \qquad (39)$$

$$\left.\frac{e_\ell}{e_{IN}}\right|_{s \to 0} = \frac{2 \times 10^4}{R_{IN2}} \quad \text{(DC gain) (low pass)} \qquad (40)$$

$$\left.\frac{e_h}{e_{IN}}\right|_{s \to \infty} = \frac{2 \times 10^3}{R_{IN2}} \quad \text{(high freq. gain) (high pass)} \qquad (41)$$

$$\left.\frac{e_b}{e_{IN}}\right|_{\omega = \omega_0} = \frac{\frac{2 \times 10^3}{R_{IN2}}\left(1 + \frac{10^4}{R_{IN1}} + \frac{10^4}{R_Q}\right)}{\left(1.1 + \frac{2 \times 10^3}{R_{IN2}}\right)} \quad \text{(center freq. gain) (band pass)} \qquad (42)$$

$$Q = \left[\frac{1 + \frac{10^4}{R_Q} + \frac{10^4}{R_{IN1}}}{1.1 + \frac{2 \times 10^3}{R_{IN2}}}\right]\sqrt{0.1\,\frac{\omega_2}{\omega_1}} \qquad (43)$$

$$R_Q = \frac{10^4}{\frac{Q}{\sqrt{0.1\,\frac{\omega_2}{\omega_1}}}\left(1.1 + \frac{2 \times 10^3}{R_{IN2}}\right) - 1 - \frac{10^4}{R_{IN1}}} \qquad (44)$$

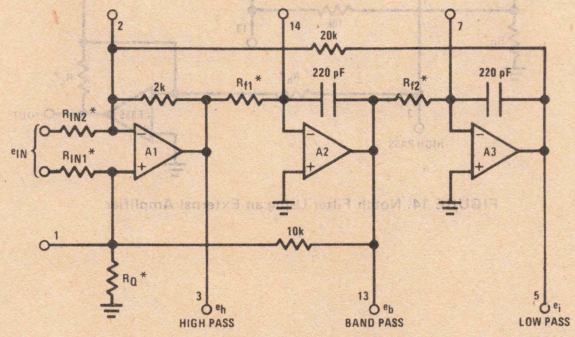

*External components

FIGURE 13. Differential Input

Appendix (Continued)

e) Notch filter *(Figure 14)* transfer function equations are:

$$\frac{e_n}{e_{IN}} = \frac{(s^2 + \omega_z^2)\left[\dfrac{1.1}{1 + \dfrac{R_{IN}}{10^4} + \dfrac{R_{IN}}{R_Q}}\right]\dfrac{R_g}{R_h}}{s^2 + s\,\omega_1\left[\dfrac{1.1}{1 + \dfrac{10^4}{R_Q} + \dfrac{10^4}{R_{IN}}}\right] + 0.1\,\omega_1\omega_2} \quad (45)$$

$$\omega_1 = \frac{10^{12}}{R_{f1} \cdot 220},\ \omega_2 = \frac{10^{12}}{R_{f2} \cdot 220},\ \omega_0 = \sqrt{0.1\,\omega_1\omega_2}$$

$$\omega_z = \omega_0\sqrt{\frac{10\,R_h}{R_L}}$$

$$\left.\frac{e_n}{e_{IN}}\right|_{s \to 0} = \frac{11}{\left(1 + \dfrac{R_{IN}}{10^4} + \dfrac{R_{IN}}{R_Q}\right)}\,\frac{R_g}{R_L} \quad \text{(DC gain)} \quad (46)$$

$$\left.\frac{e_n}{e_{IN}}\right|_{s \to \infty} = \frac{1.1}{\left(1 + \dfrac{R_{IN}}{10^4} + \dfrac{R_{IN}}{R_Q}\right)}\,\frac{R_g}{R_h} \quad \text{(high freq. gain)} \quad (47)$$

$$\left.\frac{e_n}{e_{IN}}\right|_{\omega = \omega_z} = 0 \quad (48)$$

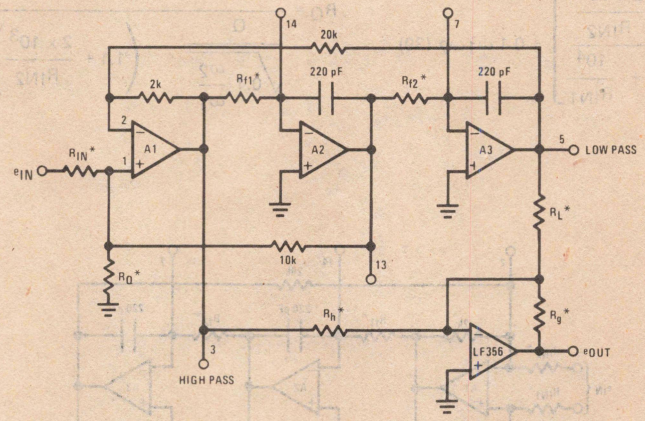

FIGURE 14. Notch Filter Using an External Amplifier

Appendix (Continued)

j) Input notch filter *(Figure 15)* transfer function equations are:

$$\frac{e_{IN}}{e_n} = -\frac{\dfrac{C_Z}{220 \times 10^{-12}}\left[s^2 + \omega_Z^2\right]}{s^2 + s\,\omega_1\left[\dfrac{1.1\,R_Q}{10^4 + R_Q}\right] + \omega_0^2} \qquad (49)$$

$$\omega_1 = \frac{10^{12}}{R_{f1} \cdot 220}, \quad \omega_2 = \frac{10^{12}}{R_{f2} \cdot 220}$$

$$\omega_Z = \omega_0 \sqrt{\frac{R_{f2} \cdot 220 \times 10^{-12}}{R_Z C_Z}}, \quad \omega_0 = \sqrt{0.1\,\omega_1\omega_2} \qquad (50)$$

$$\left.\frac{e_n}{e_{IN}}\right|_{\omega \to 0} = \frac{-R_{F2}}{R_Z} \qquad (51)$$

$$\left.\frac{e_n}{e_{IN}}\right|_{\omega \to \infty} = -\frac{C_Z}{220 \times 10^{-12}} \qquad (52)$$

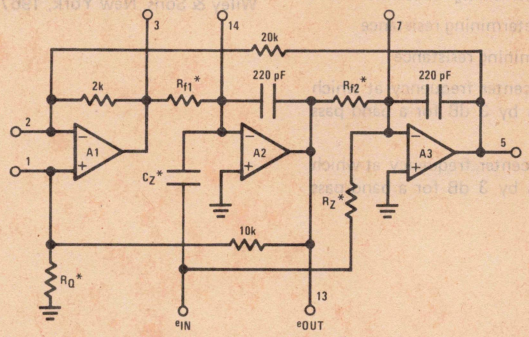

*External components

FIGURE 15. Input Notch Filter Using 3 Amplifiers

g) All pass *(Figure 16)* transfer function equations are:

$$\frac{e_o}{e_{IN}} = -\left[\frac{s^2 - s\,\omega_1\left[\dfrac{1.1}{2 + \dfrac{R_{IN}}{R_Q}}\right] + \omega_o^2}{s^2 + s\,\omega_1\left[\dfrac{1.1}{2 + \dfrac{R_{IN}}{R_Q}}\right] + \omega_0^2}\right] \qquad (53)$$

$$Q = \left[\frac{2 + \dfrac{10^4}{R_Q}}{1.1}\right]\sqrt{0.1\,\frac{\omega_2}{\omega_1}} \qquad (54)$$

$$\omega_1 = \frac{10^{12}}{R_{f1} \cdot 220}, \quad \omega_2 = \frac{10^{12}}{R_{f2} \cdot 220}$$

$$\omega_0 = \sqrt{0.1\,\omega_1\omega_2}$$

Time delay at ω_0 is $\dfrac{2Q}{\omega_0}$ seconds

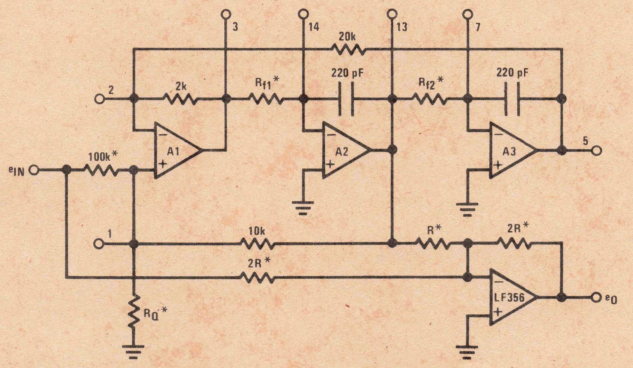

*External components

FIGURE 16. All Pass

Definition of Terms

A_{MAX}	Maximum pass band peak-to-peak ripple
A_{MIN}	Minimum stop band loss
f_z	Frequency of jw axis pole pair
f_o	Frequency of complex pole pair
Q	Quality of pole
f_c	Pass band edge
f_s	Stop band edge
R_f	Pole frequency determining resistance
R_z	Zero Frequency determining resistance
R_Q	Pole quality determining resistance
f_H	Frequency above center frequency at which the gain decreases by 3 dB for a band pass filter
f_L	Frequency below center frequency at which the gain decreases by 3 dB for a band pass filter

Bibliography

R.W. Daniels: *"Approximation Methods for Electronic Filter Design"*, McGraw-Hill Book Co., New York, 1974

G.S. Moschytz: *"Linear Integrated Networks Design"*, Van Norstrand Reinhold Co., New York, 1975

E. Christian and E. Eisenmann, *"Filter Design Tables and Graphs"*, John Wiley & Sons, New York, 1966

A.I. Zverev, *"Handbook of Filter Synthesis"*, John Wiley & Sons, New York, 1967

AF151 Dual Universal Active Filter

General Description

The AF151 consists of 2 general purpose state variable active filters in a single package. By using only 4 external resistors for each section, various second order functions may be formed. Low pass, high pass and band pass functions are available simultaneously at separate outputs. In addition, there are 2 uncommitted operational amplifiers which are available for buffering or for forming all pass and notch functions. Any of the classical filter configurations, such as Butterworth, Bessel, Cauer and Chebyshev can be easily formed.

Features

- Independent Q, frequency and gain adjustment
- Very low sensitivity to external component variation
- Separate low pass, high pass and band pass outputs
- Operation to 10 kHz
- Q range to 500
- Wide power supply range—±5V to ±18V
- Accuracy—±1%
- Fourth order functions in one package

Circuit Diagrams

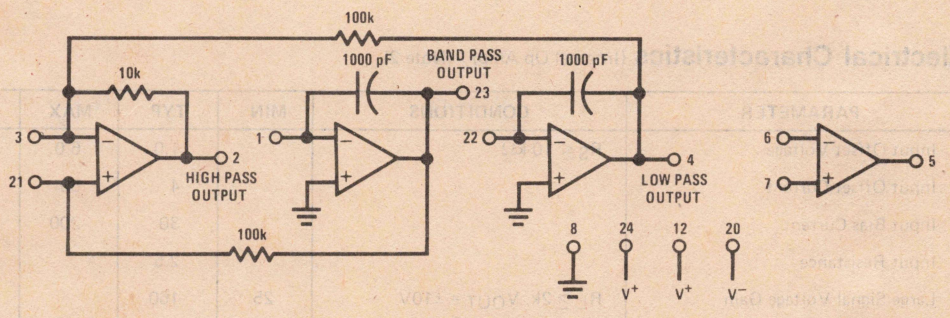

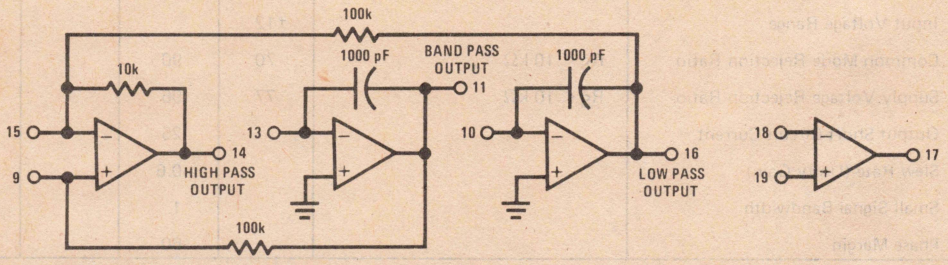

Ceramic Dual-In-Line Package HY24A
AF151-1CJ
AF151-2CJ

Absolute Maximum Ratings

Supply Voltage	±18V
Power Dissipation	900 mW/Package
Differential Input Voltage	±36V
Output Short-Circuit Duration (Note 1)	Infinite
Operating Temperature	−25°C to +85°C
Storage Temperature	−25°C to +100°C
Lead Temperature (Soldering, 10 seconds)	300°C

Electrical Characteristics (Complete Active Filter)

Specifications apply for $V_S = \pm 15V$ and over −25°C to +85°C unless otherwise specified. (Specifications apply for each section).

PARAMETER	CONDITIONS	MIN	TYP	MAX	UNITS
Frequency Range	$f_c \times Q \leq 50{,}000$			10k	Hz
Q Range	$f_c \times Q \leq 50{,}000$			500	Hz/Hz
f_o Accuracy					
AF151-1C	$f_c \times Q \leq 10{,}000$, $T_A = 25°C$			±2.5	%
AF151-2C	$f_c \times Q \leq 10{,}000$, $T_A = 25°C$			±1.0	%
f_o Temperature Coefficient			±50	±150	ppm/°C
Q Accuracy	$f_c \times Q \leq 10{,}000$, $T_A = 25°C$			±7.5	%
Q Temperature Coefficient			±300	±750	ppm/°C
Power Supply Current	$V_S = \pm 15V$		2.5	4.5	mA

Electrical Characteristics (Internal Op Amp) (Note 2)

PARAMETER	CONDITIONS	MIN	TYP	MAX	UNITS
Input Offset Voltage	$R_S \leq 10\ k\Omega$		1.0	6.0	mV
Input Offset Current			4	50	nA
Input Bias Current			30	200	nA
Input Resistance			2.5		MΩ
Large Signal Voltage Gain	$R_L \geq 2k$, $V_{OUT} = \pm 10V$	25	160		V/mV
Output Voltage Swing	$R_L = 10\ k\Omega$	±12	±14		V
	$R_L = 2\ k\Omega$	±10	±13		V
Input Voltage Range		±12			V
Common-Mode Rejection Ratio	$R_S \leq 10\ k\Omega$	70	90		dB
Supply Voltage Rejection Ratio	$R_S \leq 10\ k\Omega$	77	96		dB
Output Short-Circuit Current			25		mA
Slew Rate (Unity Gain)			0.6		V/μs
Small Signal Bandwidth			1		MHz
Phase Margin			60		Degrees

Note 1: Any of the amplifiers can be shorted to ground indefinitely; however, more than one should not be simultaneously shorted as the maximum junction temperature will be exceeded.

Note 2: Specifications apply for $V_S = \pm 15V$, $T_A = 25°C$.

Applications Information

The AF151 consists of 2 identical filter sections and 2 uncommitted op amps. The op amps may be used for buffering inputs and outputs, summing amplifiers (for notch filter generation), adjusting gain through the filter sections, additional passive networks to create higher order filters, or simply used elsewhere in the user's system.

The design equations given apply to both sections; however, for clarity, only the pin designations for section 1 will be shown in the examples and discussion.

See the AF100 data sheet for additional information on this type of filter.

The design equations assume that the user has knowledge of the frequency and Q values for the particular design to be synthesized. If this is not the case, various references and texts are available to help the user in determining these parameters. A bibliography of recommended texts can also be found in the AF100 data sheet.

CIRCUIT DESCRIPTION AND OPERATION

A schematic of one section of the AF151 is shown in *Figure 1*. Amplifier A1 is a summing amplifier with inputs from integrator A2 to the non-inverting input and integrator A3 to the inverting input. Amplifier A4 is an uncommitted amplifier.

By adding external resistors the circuit can be used to generate the second order system.

$$T(s) = \frac{a_3 s^2 + a_2 s + a_1}{s^2 + b_2 s + b_1}$$

The denominator coefficients determine the complex pole pair location and the quality of the poles where

$\omega_o = \sqrt{b_1}$ = the radian center frequency

$Q = \frac{\omega_o}{b_2}$ = the quality of the complex pole pair

If the output is taken from the output of A1, numerator coefficients a_1 and a_2 equal zero, and the transfer function becomes:

$$T(s) = \frac{a_3 s^2}{s^2 + \frac{\omega_o}{Q} s + \omega_o^2} \qquad \text{(high pass)}$$

If the output is taken from the output of A2, numerator coefficients a_1 and a_3 equal zero and the transfer functions becomes:

$$T(s) = \frac{a_2 s}{s^2 + \frac{\omega_o}{Q} s + \omega_o^2} \qquad \text{(band pass)}$$

If the output is taken from the output of A3, numerator coefficients a_3 and a_2 equal zero and the transfer function becomes:

$$T(s) = \frac{a_1}{s^2 + \frac{\omega_o}{Q} s + \omega_o^2} \qquad \text{(low pass)}$$

Using proper input and output connections the circuit can also be used to generate the transfer functions for a notch and all pass filter.

In the transfer function for a notch function a_2 becomes zero, a_1 equals ω_z^2 and a_3 equals 1. The transfer function becomes:

$$T(s) \quad \frac{s^2 + \omega_z^2}{s^2 + \frac{\omega_o}{Q} s + \omega_o^2} \qquad \text{(notch)}$$

In the all pass transfer function $a_1 = \omega_o^2$, $a_2 = -\omega_o/Q$ and $a_3 = 1$. The transfer function becomes:

$$T(s) \quad \frac{s^2 - \frac{\omega_o}{Q} s + \omega_o^2}{s^2 + \frac{\omega_o}{Q} s + \omega_o^2} \qquad \text{(all pass)}$$

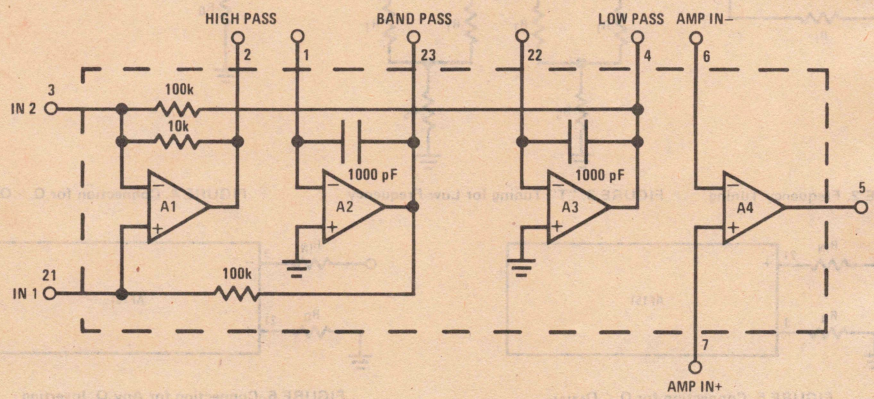

FIGURE 1. AF151 Schematic (Section 1)

Applications Information (Continued)

FREQUENCY CALCULATIONS

For operation above 200 Hz, the frequency of each section of the AF151 is set by 2 equal valued resistors. These resistors couple the output of the first op amp (pin 2) to the input of the second op amp (pin 1) and the output of the second op amp (pin 23) to the input of the third op amp (pin 22).

The value for R_f is given by:

$$R_f = \frac{50.33 \times 10^6}{f_o}\ \Omega \qquad (1)$$

For operation below 200 Hz, "T" tuning should be used as shown in *Figure 3*.

For this configuration,

$$R_S = \frac{R_T^2}{R_f - 2R_T} \qquad (2)$$

where R_T or R_S can be chosen arbitrarily, once R_f is found from equation 1.

Q CALCULATIONS

To set the Q of each section of the AF151, one resistor is required. The value of the Q setting resistor depends on the input connection (inverting or non-inverting) and the input resistance. Because the input resistance does affect the Q, it is often desirable to use one of the uncommitted op amps to provide a buffer between the signal source impedance and the input resistor used to set the Q.

To determine which connection is required for a particular Q, arbitrarily select a value of R_{IN} *(Figure 4)* and calculate Q_{MIN} according to equation 3.

$$Q_{MIN} = \frac{1 + \dfrac{10^5}{R_{IN}}}{3.48} \qquad (3)$$

If the Q required for the circuit is greater than Q_{MIN}, use equation 4 to calculate the value of R_Q and the connection shown in *Figure 4*.

$$R_Q = \frac{10^5}{3.48Q - 1 - \dfrac{10^5}{R_{IN}}} \qquad (4)$$

If the Q required for the circuit is less than Q_{MIN}, use equation 5 to calculate the value of R_Q and the connection shown in *Figure 5*.

$$R_Q = \frac{10^4}{\dfrac{0.3162}{Q}\left(1 + \dfrac{10^5}{R_{IN}}\right) - 1.1} \qquad (5)$$

Both connections shown in *Figures 4 and 5* are "non-inverting" relative to the phase relationship between the input signal and the low pass output.

For any Q, equation 6 may be used with the "inverting" connection shown in *Figure 6*.

$$R_Q = \frac{10^5}{3.16\,Q\left(1.1 + \dfrac{10^4}{R_{IN}}\right) - 1} \qquad (6)$$

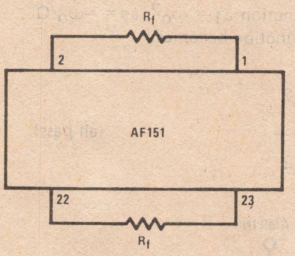

FIGURE 2. Frequency Tuning

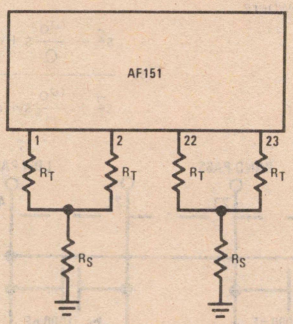

FIGURE 3. "T" Tuning for Low Frequency

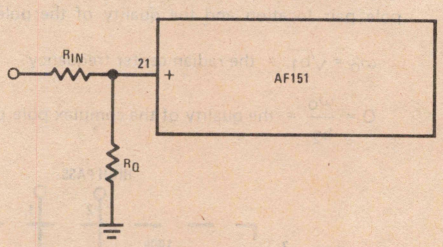

FIGURE 4. Connection for Q > Q_{MIN}

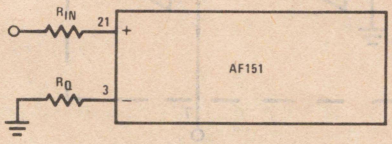

FIGURE 5. Connection for Q < Q_{MIN}

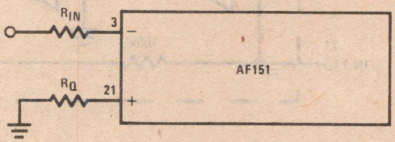

FIGURE 6. Connection for Any Q, Inverting

Applications Information (Continued)

NOTCH TUNING

When the low pass output and the high pass output are summed together, the result is a notch *(Figure 7)*.

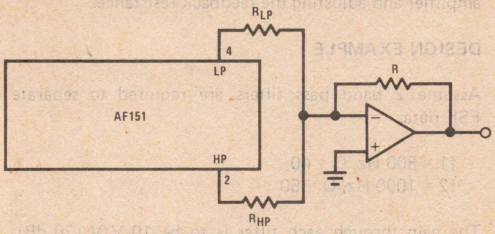

FIGURE 7. Notch Filter

The relationship between R_{LP}, R_{HP}, f_o and f_z, the location of the notch, is given by equation 7.

$$R_{HP} = \left(\frac{f_z}{f_o}\right)^2 \frac{R_{LP}}{10} \qquad (7)$$

Again, it is advantageous to use one of the uncommitted op amps to perform this summing function to prevent loading of this stage or the resistors R_{LP} and R_{HP} from effecting the Q of subsequent stages. Resistor R can be used to set the gain of the filter section.

GAIN CALCULATIONS

The following list of equations will be helpful in calculating the relationship between the external components and various important parameters. The following definitions are use:

A_L – Gain from input to low pass output at DC
A_H – Gain from input to high pass output at high frequency
A_B – Gain from input to band pass output at center frequency

For *Figure 4*:

$$A_L = \frac{11}{\Delta}$$

$$A_H = \frac{1.1}{\Delta}$$

$$A_B = \frac{-\left(1 + \frac{10^5}{R_Q} + \frac{10^5}{R_{IN}}\right)}{\Delta}$$

$$\Delta = 1 + \frac{R_{IN}}{10^5} + \frac{R_{IN}}{R_Q}$$

For *Figure 5:*

$$A_L = \frac{11 + \frac{10^5}{R_Q}}{\Delta}$$

$$A_H = \frac{1.1 + \frac{10^4}{R_Q}}{\Delta}$$

$$A_B = \frac{-\left(1 + \frac{10^5}{R_{IN}}\right)}{\Delta}$$

$$\Delta = 1 + \frac{R_{IN}}{10^5}$$

For *Figure 6:*

$$A_L = -\frac{10^5}{R_{IN}}$$

$$A_H = -\frac{10^4}{R_{IN}}$$

$$A_B = \frac{\frac{10^5}{R_{IN}}\left(1 + \frac{10^5}{R_Q}\right)}{11 + \frac{10^5}{R_{IN}}}$$

For *Figure 7*:

At low frequency, when $f_o < f_z$, the gain to the output of the summing op amp is:

$$A_L = \frac{11\left(\frac{R}{R_{LP}}\right)}{\left(1 + \frac{R_{IN}}{10^5} + \frac{R_{IN}}{R_Q}\right)}$$

At high frequency, when $f_o > f_z$, the gain to the output of the summing op amp is:

$$A_H = \frac{1.1\left(\frac{R}{R_{HP}}\right)}{\left(1 + \frac{R_{IN}}{10^5} + \frac{R_{IN}}{R_Q}\right)}$$

At the notch, ideally the gain is zero (0).

TUNING TIPS

In applications where 2% to 3% accuracy is not sufficient to provide the required filter response, the AF151 stages can be tuned by adding trim pots or trim resistors in series or parallel with one of the frequency determining resistors and the Q determining resistor.

When tuning a filter section, no matter what output configuration is to be used in the circuit, measurements are made between the input and the band pass output.

Before any tuning is attempted, the low pass output should be checked to see that the output is not clipping. At the center frequency of the section, the low pass output is 10 dB higher than the band pass output and 20 dB higher than the high pass. This should be kept in mind because if clipping occurs, the results obtained when tuning will be incorrect.

Applications Information (Continued)

Frequency Tuning

By adjusting resistor R_f, center frequency of a section can be adjusted. Adjusting center frequency by phase is the most accurate but tuning for maximum gain is also correct.

Q Tuning

The Q is tuned by adjusting the R_Q resistor. To tune the Q correctly, the signal source must have an output impedance very much lower than the input resistance of the filter since the input resistance affects the Q. The input must be driven through the same resistance the circuit will "see" to obtain precise adjustment.

The lower 3 dB (45°) frequency, f_L, and the upper 3 dB (45°) frequency, f_H, can be calculated by the following equations:

$$f_H = \left(\frac{1}{2Q} + \sqrt{\left(\frac{1}{2Q}\right)^2 + 1}\right) \times (f_o)$$

where f_o = center frequency

$$f_L = \left(\sqrt{\left(\frac{1}{2Q}\right)^2 + 1} - \frac{1}{2Q}\right) \times (f_o)$$

When adjusting the Q, set the signal source to either f_H or f_L and adjust for 45° phase change or a 3 dB gain change.

Notch Tuning

If a circuit has a jw axis zero pair, the notch can be tuned by adjusting the ratio of the summing resistors (low pass/high pass summing).

In either case, the signal is connected to the input and the proper resistor is adjusted for a null at the output.

TUNING PROCEDURE

Center Frequency Tuning

Set oscillator to center frequency desired for the filter section, adjust amplitude and check that clipping does not occur at the low pass output.

Adjust the R_f resistor until the phase shift between input and band pass output is 180° or 0°, depending upon the connection.

Q Tuning

Set oscillator to upper or lower 45° frequency (see tuning tips) and tune the Q resistor until the phase shift is 135° (upper 45° frequency) or 225° (lower 45° frequency).

Zero Tuning (Notch Tuning)

Set the oscillator output to the zero frequency and tune one of the summing resistors for a null at the output of the summing amplifier.

Gain Adjust

Set the oscillator to any desired frequency and the gain can be adjusted by measuring the output of the summing amplifier and adjusting the feedback resistance.

DESIGN EXAMPLE

Assume 2 band pass filters are required to separate FSK data.

f1 = 800 Hz, Q = 40
f2 = 1000 Hz, Q = 50

The gain through each filter is to be 10 V/V (20 dB).

Since the design is similar for both sections, only the first section design will be shown for the example.

(a) From equation 1

$$R_f = \frac{50.33 \times 10^6}{f_o} = \frac{50.33 \times 10^6}{800}$$

$$\boxed{R_f = 62.9k}$$

(b) Checking Q_{MIN} from equation 3, arbitrarily let R_{IN} = 300k.

$$Q_{MIN} = \frac{1 + \frac{10^5}{R_{IN}}}{3.48} = \frac{1 + \frac{10^5}{3 \times 10^5}}{3.48} = 0.383$$

Since the Q required for the design (Q = 40), is greater than Q_{MIN}, the circuit of *Figure 4* or *Figure 6* may be used. Arbitrarily we shall select the circuit of *Figure 4*.

(c) From equation 4, R_Q is found to be

$$R_Q = \frac{10^5}{3.48Q - 1 - \frac{10^5}{R_{IN}}} = \frac{10^5}{(3.48)(40) - 1 - \frac{10^5}{3 \times 10^5}}$$

or $\boxed{R_Q = 725\Omega}$

(d) Calculate the center frequency gain for *Figure 4*.

$$A_B = \frac{-\left(1 + \frac{10^5}{R_Q} + \frac{10^5}{R_{IN}}\right)}{\left(1 + \frac{R_{IN}}{10^5} + \frac{R_{IN}}{R_Q}\right)} = \frac{-(1 + 137.9 + 0.333)}{(1 + 3.0 + 414)}$$

A_B = 0.333 V/V

Since the gain at f_o is 0.333 V/V, a gain of 10 V/V can be obtained by using the uncommitted operational amplifier with a gain of 30.03 as shown in *Figure 8*.

Applications Information (Continued)

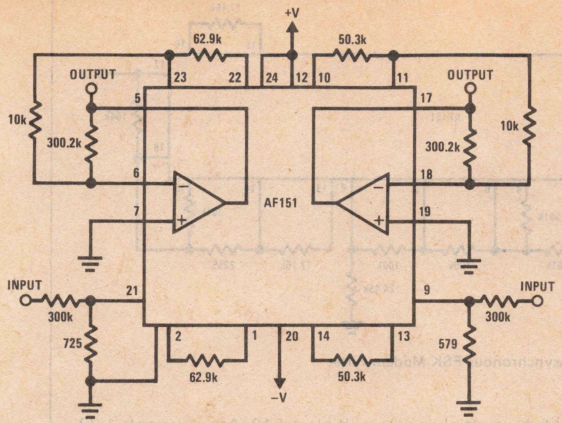

FIGURE 8. Dual Band Pass Filter

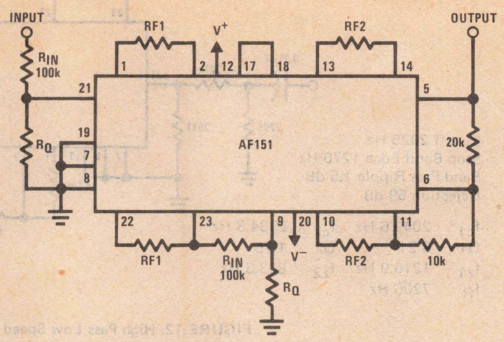

FIGURE 9. Telephone Multifrequency (MF) Band Pass Filter

FREQ	BW	f_c	f1	Q1 & Q2	f2	RF1	RF2	RQ
700	75	698.4	665.6	17	732.8	75.62k	68.68k	1.749k
900	75	898.7	865.8	21.8	932.9	58.13k	53.95k	1.354k
1100	75	1098.8	1065.7	26.7	1132.9	47.23k	44.43k	1.100k
1300	75	1298.9	1265.8	31.6	1332.9	39.76k	37.76k	926.2Ω
1500	75	1499.0	1465.8	36.4	1532.9	34.34k	32.83k	802.1Ω
1700	75	1699.1	1665.9	41.3	1733.0	30.21k	29.04k	705.6Ω

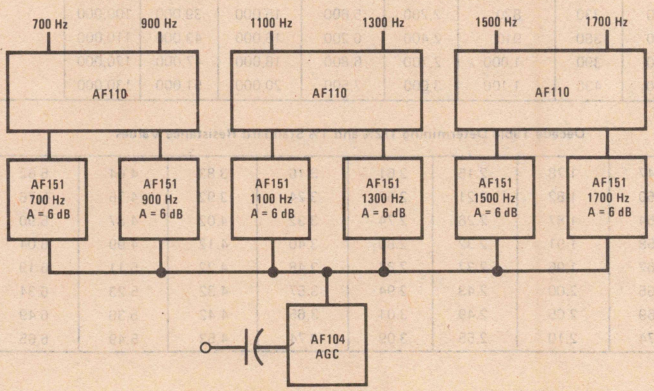

FIGURE 10. MF Tone Receiver

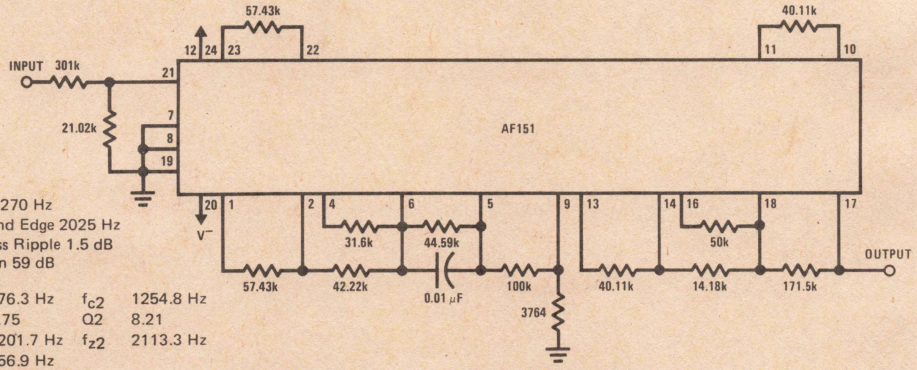

Cutoff 1270 Hz
Stop Band Edge 2025 Hz
Band Pass Ripple 1.5 dB
Rejection 59 dB

f_{c1}	876.3 Hz	f_{c2}	1254.8 Hz
Q1	1.75	Q2	8.21
f_{z1}	3201.7 Hz	f_{z2}	2113.3 Hz
f_R	356.9 Hz		

FIGURE 11. Low Pass Low Speed Asynchronous FSK Modem Filter

Applications Information (Continued)

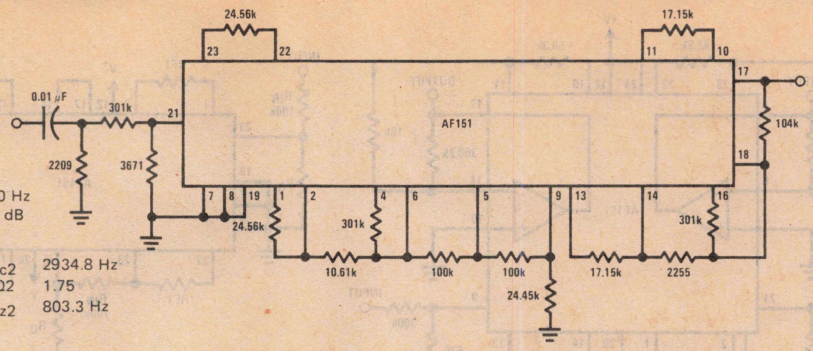

Cutoff 2025 Hz
Stop Band Edge 1270 Hz
Band Pass Ripple 1.5 dB
Rejection 59 dB

f_{c1}	2049.6 Hz	f_{c2}	2934.8 Hz
Q1	8.21	Q2	1.75
f_{z1}	1216.9 Hz	f_{z2}	803.3 Hz
f_R	7206 Hz		

FIGURE 12. High Pass Low Speed Asynchronous FSK Modem Filter

Standard Resistance Values are obtained from the Decade Table by multiplying by multiples of 10. As an example, 1.33 can represent 1.33Ω, 133Ω, 1.33 kΩ, 13.3 kΩ, 133 kΩ 1.33 MΩ.

Standard 5% and 2% Resistance Values

OHMS	OHMS	OHMS	OHMS	OHMS	OHMS	OHMS	OHMS	OHMS	OHMS	OHMS	MEGOHMS	
10	27	68	180	470	1,200	3,300	8,200	22,000	56,000	150,000	0.24	0.62
11	30	75	200	510	1,300	3,600	9,100	24,000	62,000	160,000	0.27	0.68
12	33	82	220	560	1,500	3,900	10,000	27,000	68,000	180,000	0.30	0.75
13	36	91	240	620	1,600	4,300	11,000	30,000	75,000	200,000	0.33	0.82
15	39	100	270	680	1,800	4,700	12,000	33,000	82,000	220,000	0.36	0.91
16	43	110	300	750	2,000	5,100	13,000	36,000	91,000		0.39	1.0
18	47	120	330	820	2,200	5,600	15,000	39,000	100,000		0.43	1.1
20	51	130	360	910	2,400	6,200	16,000	43,000	110,000		0.47	1.2
22	56	150	390	1,000	2,700	6,800	18,000	47,000	120,000		0.51	1.3
24	62	160	430	1,100	3,000	7,500	20,000	51,000	130,000		0.56	1.5

Decade Table Determining 1/2% and 1% Standard Resistance Values

1.00	1.21	1.47	1.78	2.15	2.61	3.16	3.83	4.64	5.62	6.81	8.25
1.02	1.24	1.50	1.82	2.21	2.67	3.24	3.92	4.75	5.76	6.98	8.45
1.05	1.27	1.54	1.87	2.26	2.74	3.32	4.02	4.87	5.90	7.15	8.66
1.07	1.30	1.58	1.91	2.32	2.80	3.40	4.12	4.99	6.04	7.32	8.87
1.10	1.33	1.62	1.96	2.37	2.87	3.48	4.22	5.11	6.19	7.50	9.09
1.13	1.37	1.65	2.00	2.43	2.94	3.57	4.32	5.23	6.34	7.68	9.31
1.15	1.40	1.69	2.05	2.49	3.01	3.65	4.42	5.36	6.49	7.87	9.53
1.18	1.43	1.74	2.10	2.55	3.09	3.74	4.53	5.49	6.65	8.06	9.76

National Semiconductor

Active Filters

PRELIMINARY

AF160 Universal Wideband Active Filter

General Description

The AF160 state variable active filter is a general second order lumped RC network. Only four external resistors program the AF160 for specific second order functions. Lowpass, highpass, and bandpass functions are available simultaneously at separate outputs. Notch and allpass functions are available by summing the outputs in the uncommitted output summing amplifier. Higher order systems are realized by cascading AF160 active filters with appropriate programming resistors.

Any of the classical filter configurations, such as Butterworth, Bessel, Cauer, and Chebyshev can be formed.

Features

- Military or commercial specifications
- Independent Q, frequency, gain adjustments
- Low sensitivity to external component variation
- Separate lowpass, highpass, bandpass outputs
- Inputs may be differential, inverting, or non-inverting
- Allpass and notch outputs may be formed using uncommitted amplifier
- Operates to 40 kHz
- Q range to 500
- Power supply range ±5V to ±18V
- Frequency accuracy ±1% unadjusted
- Q frequency product ≤ 200,000

Connection Diagrams

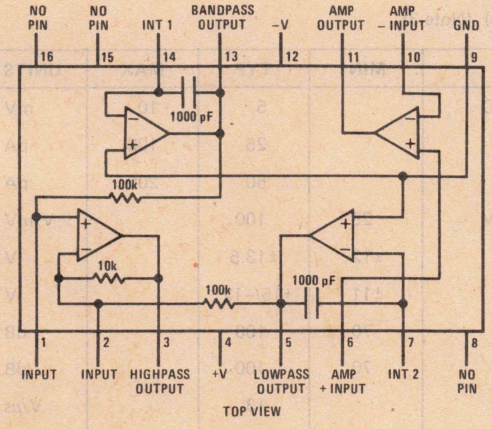

Ceramic Dual-In-Line Package
Order Numbers
AF160-1CJ, AF160-2CJ
NS Package Number HY13A

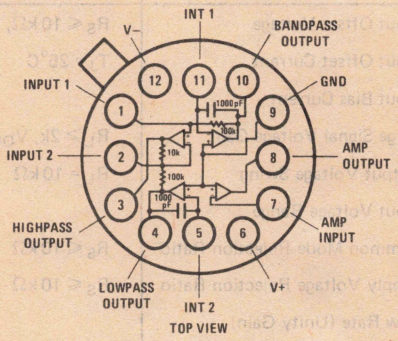

Metal Can Package
Order Numbers
AF160-1CG, AF160-1G,
AF160-2CG, AF160-2G
NS Pakcage Number HY12A

Absolute Maximum Ratings

Supply Voltage	±18V
Power Dissipation	900 mW/Package (500 mW/Amp)
Differential Input Voltage	±36V
Output Short Circuit Duration (Note 1)	Infinite
Lead Temperature (Soldering, 10 seconds)	300°C

Operating Temperature

AF160-1CJ, AF160-2CJ, AF160-1CG, AF160-2CG	−25°C to +85°C
AF160-1G, AF160-2G	−55°C to +125°C

Storage Temperature

AF160-1G, AF160-2G	−65°C to +125°C
AF160-1CG, AF160-2CG, AF160-1CJ, AF160-2CJ	−25°C to +100°C

Electrical Characteristics (Complete Active Filter) (Note 2)

PARAMETER	CONDITIONS	MIN	TYP	MAX	UNITS
Frequency Range	$f_C \times Q \leqslant 200{,}000$			100k	Hz
Q Range	$f_C \times Q \leqslant 200{,}000$			500	Hz/Hz
f_O Accuracy					
AF160-1, AF160-1C	$f_C \times Q \leqslant 40{,}000$, $T_A = 25°C$			±2.5	%
AF160-2, AF160-2C	$f_C \times Q \leqslant 40{,}000$, $T_A = 25°C$			±1.0	%
f_O Temperature Coefficient			±50	±150	ppm/°C
Q Accuracy	$f_C \times Q \leqslant 40{,}000$, $T_A = 25°C$			±7.5	%
Q Temperature Coefficient			±300	±750	ppm/°C
Power Supply Current	$V_S = \pm 15V$		7.2	11	mA

Electrical Characteristics (Internal Op Amp) (Note 3)

PARAMETER	CONDITIONS	MIN	TYP	MAX	UNITS
Input Offset Voltage	$R_S \leqslant 10\,k\Omega$, $T_A = 25°C$		5	10	mV
Input Offset Current	$T_J = 25°C$		25	100	pA
Input Bias Current			50	200	pA
Large Signal Voltage Gain	$R_L \geqslant 2k$, $V_{OUT} = \pm 10V$	25	100		V/mV
Output Voltage Swing	$R_L = 10\,k\Omega$	±12	±13.5		V
Input Voltage Range		±11	+15/−12		V
Common Mode Rejection Ratio	$R_S \leqslant 10\,k\Omega$	70	100		dB
Supply Voltage Rejection Ratio	$R_S \leqslant 10\,k\Omega$	70	100		dB
Slew Rate (Unity Gain)			13		V/μs
Small Signal Bandwidth			4		MHz

Note 1: Any of the amplifiers can be shorted to ground indefinitely; however, more than one should not be simultaneously shorted, as the maximum junction temperature will be exceeded.

Note 2: Specifications apply for $V_S = \pm 15V$, over −25°C to +85°C for the AF160-1C and AF160-2C and over −55°C to +125°C for the AF160-1 and AF160-2, unless otherwise specified.

Note 3: Specifications apply for $V_S = \pm 15V$, $T_A = 25°C$.

Applications Information

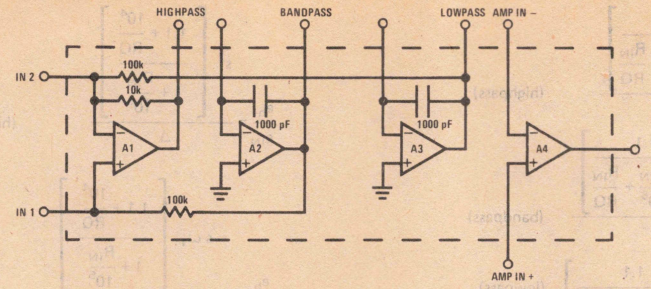

FIGURE 1. AF160 Schematic

CIRCUIT DESCRIPTION AND OPERATION

A schematic of the AF160 is shown in *Figure 1.* Amplifier A1 is a summing amplifier with inputs from integrator A2 to the non-inverting input and integrator A3 to the inverting input. Amplifier A4 is an uncommitted amplifier.

By adding external resistors the circuit can be used to generate the second order system

$$T(s) = \frac{a_3 s^2 + a_2 s + a_1}{s^2 + b_2 s + b_1}$$

The denominator coefficients determine the complex pole pair location and the quality of the poles where

$$\omega_0 = \sqrt{b_1} = \text{the radian center frequency}$$

$$Q = \frac{\omega_0}{b_2} = \text{the quality of the complex pole pair}$$

If the output is taken from the output of A1, numerator coefficients a_1 and a_2 equal zero, and the transfer function becomes:

$$T(s) = \frac{a_3 s^2}{s^2 + \frac{\omega_0}{Q} s + \omega_0^2} \qquad \text{(highpass)}$$

If the output is taken from the output of A2, numerator coefficients a_1 and a_3 equal zero and the transfer function becomes:

$$T(s) = \frac{a_2 s}{s^2 + \frac{\omega_0}{Q} s + \omega_0^2} \qquad \text{(bandpass)}$$

If the output is taken from the output of A3, numerator coefficients a_3 and a_2 equal zero and the transfer function becomes:

$$T(s) = \frac{a_1}{s^2 + \frac{\omega_0}{Q} s + \omega_0^2} \qquad \text{(lowpass)}$$

Using proper input and output connections the circuit can also be used to generate the transfer functions for a notch and allpass filter.

In the transfer function for a notch function a_2 becomes zero, a_1 equals 1, and a_3 equals ω_Z^2. The transfer function becomes:

$$T(s) = \frac{s^2 + \omega_Z^2}{s^2 + \frac{\omega_0}{Q} s + \omega_0^2} \qquad \text{(notch)}$$

In the allpass transfer function $a_1 = 1$, $a_2 = -\omega_0/Q$ and $a_3 = \omega_0^2$. The transfer function becomes:

$$T(s) = \frac{s^2 - \frac{\omega_0}{Q} s + \omega_0^2}{s^2 + \frac{\omega_0}{Q} s + \omega_0^2} \qquad \text{(allpass)}$$

COMMON CONFIGURATIONS

The specific transfer functions for some of the most useful circuit configurations using the AF160 are illustrated in *Figures 2 through 8.* Also included are the gain equations for each transfer function in the frequency band of interest, the Q equation, center frequency equation and the Q determining resistor equation.

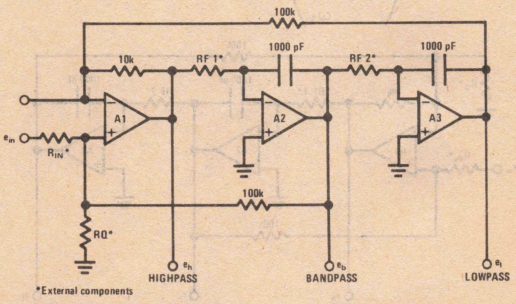

FIGURE 2. Non-inverting Input ($Q > Q_{MIN}$, See Q Tuning Section)

Applications Information (Continued)

a) Non-inverting input *(Figure 2)* transfer equations are:

$$\frac{e_h}{e_{IN}} = \frac{s^2\left[\dfrac{1.1}{1+\dfrac{R_{IN}}{10^5}+\dfrac{R_{IN}}{RQ}}\right]}{\Delta} \quad \text{(highpass)}$$

$$\frac{e_b}{e_{IN}} = \frac{-s\,\omega_1\left[\dfrac{1.1}{1+\dfrac{R_{IN}}{10^5}+\dfrac{R_{IN}}{RQ}}\right]}{\Delta} \quad \text{(bandpass)}$$

$$\frac{e_\ell}{e_{IN}} = \frac{\omega_1\omega_2\left[\dfrac{1.1}{1+\dfrac{R_{IN}}{10^5}+\dfrac{R_{IN}}{RQ}}\right]}{\Delta} \quad \text{(lowpass)}$$

$$\omega_1 = \frac{10^9}{R_{F1}} \qquad \omega_2 = \frac{10^9}{R_{F2}}$$

where

$$\Delta = s^2 + s\left[\frac{1.1}{1+\dfrac{10^5}{RQ}+\dfrac{10^5}{R_{IN}}}\right]\omega_1 + 0.1\,\omega_1\omega_2$$

$$\left.\frac{e_\ell}{e_{IN}}\right|_{s\to 0} = \frac{11}{\left(1+\dfrac{R_{IN}}{10^5}+\dfrac{R_{IN}}{RQ}\right)}$$

$$\left.\frac{e_h}{e_{IN}}\right|_{s\to\infty} = \frac{1.1}{\left(1+\dfrac{R_{IN}}{10^5}+\dfrac{R_{IN}}{RQ}\right)}$$

$$\left.\frac{e_b}{e_{IN}}\right|_{\omega=\omega_0} = -\frac{\left(1+\dfrac{10^5}{RQ}+\dfrac{10^5}{R_{IN}}\right)}{\left(1+\dfrac{R_{IN}}{10^5}+\dfrac{R_{IN}}{RQ}\right)}$$

$$\omega_0 = \sqrt{0.1\,\omega_1\omega_2}$$

$$Q = \left(\frac{1+\dfrac{10^5}{R_{IN}}+\dfrac{10^5}{RQ}}{1.1}\right)\sqrt{0.1\left(\frac{\omega_2}{\omega_1}\right)}$$

$$RQ = \frac{10^5}{\left(\dfrac{1.1Q}{\sqrt{0.1\dfrac{\omega_2}{\omega_1}}}\right) - 1 - \dfrac{10^5}{R_{IN}}}$$

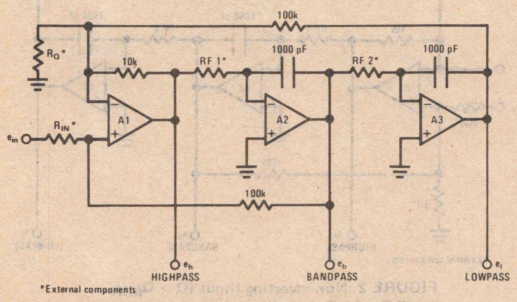

FIGURE 3. Non-Inverting Input ($Q < Q_{MIN}$, See Q Tuning Section)

b) Non-inverting input *(Figure 3)* transfer equations are:

$$\frac{e_h}{e_{IN}} = \frac{s^2\left[\dfrac{1.1+\dfrac{10^4}{RQ}}{1+\dfrac{R_{IN}}{10^5}}\right]}{\Delta} \quad \text{(highpass)}$$

$$\frac{e_b}{e_{IN}} = \frac{-s\,\omega_1\left[\dfrac{1.1+\dfrac{10^4}{RQ}}{1+\dfrac{R_{IN}}{10^5}}\right]}{\Delta} \quad \text{(bandpass)}$$

$$\frac{e_\ell}{e_{IN}} = \frac{\omega_1\omega_2\left[\dfrac{1.1+\dfrac{10^4}{RQ}}{1+\dfrac{R_{IN}}{10^5}}\right]}{\Delta} \quad \text{(lowpass)}$$

$$\omega_1 = \frac{10^9}{R_{F1}} \qquad \omega_2 = \frac{10^9}{R_{F2}}$$

where

$$\Delta = s^2 + s\,\omega_1\left[\frac{1.1+\dfrac{10^4}{RQ}}{1+\dfrac{10^5}{R_{IN}}}\right] + 0.1\,\omega_1\omega_2$$

$$\left.\frac{e_\ell}{e_{IN}}\right|_{s\to 0} = \frac{1.1+\dfrac{10^4}{RQ}}{0.1\left(1+\dfrac{R_{IN}}{10^5}\right)}$$

$$\left.\frac{e_h}{e_{IN}}\right|_{s\to\infty} = \frac{1.1+\dfrac{10^4}{RQ}}{1+\dfrac{R_{IN}}{10^5}}$$

$$\left.\frac{e_b}{e_{IN}}\right|_{\omega=\omega_0} = -\frac{1+\dfrac{10^5}{R_{IN}}}{1+\dfrac{R_{IN}}{10^5}}$$

$$\omega_0 = \sqrt{0.1\,\omega_1\omega_2}$$

$$Q = \left[\frac{1+\dfrac{10^5}{R_{IN}}}{1.1+\dfrac{10^4}{RQ}}\right]\sqrt{0.1\frac{\omega_2}{\omega_1}}$$

$$RQ = \frac{10^4}{\left(1+\dfrac{10^5}{R_{IN}}\right)\left(\dfrac{\sqrt{0.1\dfrac{\omega_2}{\omega_1}}}{Q}\right) - 1.1}$$

Applications Information (Continued)

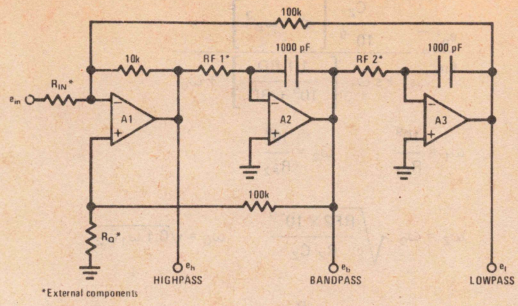

FIGURE 4. Inverting Input

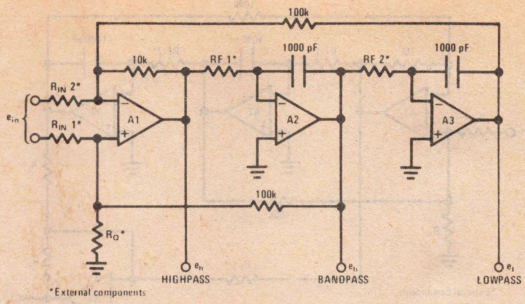

FIGURE 5. Differential Input

c) Inverting input *(Figure 4)* transfer function equations are:

$$\frac{e_h}{e_{IN}} = \frac{-s^2 \dfrac{10^4}{R_{IN}}}{\Delta} \qquad \text{(highpass)}$$

$$\frac{e_b}{e_{IN}} = \frac{s\,\omega_1 \dfrac{10^4}{R_{IN}}}{\Delta} \qquad \text{(bandpass)}$$

$$\frac{e_\ell}{e_{IN}} = \frac{-\omega_1\,\omega_2 \dfrac{10^4}{R_{IN}}}{\Delta} \qquad \text{(lowpass)}$$

$$\omega_1 = \frac{10^9}{R_{F1}} \qquad \omega_2 = \frac{10^9}{R_{F2}}$$

where

$$\Delta = s^2 + s\,\omega_1 \left[\frac{1.1 + \dfrac{10^4}{R_{IN}}}{1 + \dfrac{10^5}{R_Q}} \right] + 0.1\,\omega_1\omega_2$$

$$\left.\frac{e_\ell}{e_{IN}}\right|_{s \to 0} = -\frac{10^5}{R_{IN}} \qquad \text{(lowpass)}$$

$$\left.\frac{e_h}{e_{IN}}\right|_{s \to \infty} = -\frac{10^4}{R_{IN}} \qquad \text{(highpass)}$$

$$\left.\frac{e_b}{e_{IN}}\right|_{\omega = \omega_0} = \frac{\dfrac{10^4}{R_{IN}}\left(1 + \dfrac{10^5}{RQ}\right)}{1.1 + \dfrac{10^4}{R_{IN}}} \qquad \text{(bandpass)}$$

$$\omega_0 = \sqrt{0.1\,\omega_1\omega_2}$$

$$Q = \left[\frac{1 + \dfrac{10^5}{RQ}}{1.1 + \dfrac{10^4}{R_{IN}}} \right] \sqrt{0.1\,\frac{\omega_2}{\omega_1}}$$

$$RQ = \frac{10^5}{\dfrac{Q}{\sqrt{0.1\,\dfrac{\omega_2}{\omega_1}}}\left(1.1 + \dfrac{10^4}{R_{IN}}\right) - 1}$$

d) Differential input *(Figure 5)* transfer function equations are:

$$\frac{e_h}{e_{IN}} = \frac{s^2 \dfrac{10^4}{R_{IN2}}}{\Delta} \qquad \text{(highpass)}$$

$$\frac{e_b}{e_{IN}} = \frac{-s\,\omega_1 \dfrac{10^4}{R_{IN2}}}{\Delta} \qquad \text{(bandpass)}$$

$$\frac{e_\ell}{e_{IN}} = \frac{\omega_1\omega_2 \dfrac{10^4}{R_{IN2}}}{\Delta} \qquad \text{(lowpass)}$$

$$\omega_1 = \frac{10^9}{R_{F1}} \qquad \omega_2 = \frac{10^9}{R_{F2}}$$

where

$$\Delta = s^2 + s\,\omega_1 \left[\frac{1.1 + \dfrac{10^4}{R_{IN2}}}{1 + \dfrac{10^5}{RQ} + \dfrac{10^5}{R_{IN1}}} \right] + 0.1\,\omega_1\omega_2$$

$$\left.\frac{e_\ell}{e_{IN}}\right|_{s \to 0} = \frac{10^5}{R_{IN2}}$$

$$\left.\frac{e_h}{e_{IN}}\right|_{s \to \infty} = \frac{10^4}{R_{IN2}}$$

$$\left.\frac{e_b}{e_{IN}}\right|_{\omega = \omega_0} = \frac{-\dfrac{10^4}{R_{IN2}}\left(1 + \dfrac{10^5}{R_{IN1}} + \dfrac{10^5}{RQ}\right)}{\left(1.1 + \dfrac{10^4}{R_{IN2}}\right)}$$

$$Q = \left[\frac{1 + \dfrac{10^5}{RQ} + \dfrac{10^5}{R_{IN1}}}{1.1 + \dfrac{10^4}{R_{IN2}}} \right] \sqrt{0.1\,\frac{\omega_2}{\omega_1}}$$

$$RQ = \frac{10^5}{\dfrac{Q}{\sqrt{0.1\,\dfrac{\omega_2}{\omega_1}}}\left(1.1 + \dfrac{10^4}{R_{IN2}}\right) - 1 - \dfrac{10^5}{R_{IN1}}}$$

Applications Information (Continued)

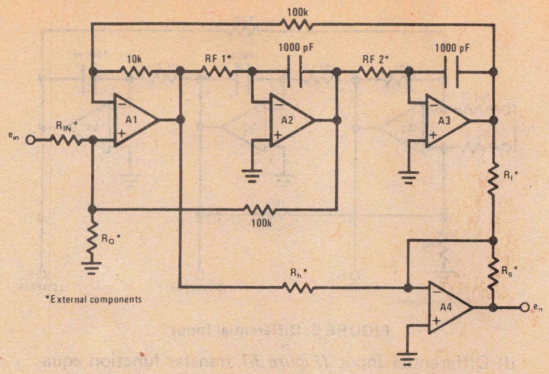

FIGURE 6. Output Notch Using All Four Amplifiers

e) Output notch *(Figure 6)* transfer function equations are:

$$\frac{e_n}{e_{IN}} = \frac{(s^2 + \omega_Z{}^2)\left[\dfrac{1.1}{1 + \dfrac{R_{IN}}{10^5} + \dfrac{R_{IN}}{RQ}}\right]\dfrac{R_g}{R_h}}{s^2 + s\,\omega_1\left[\dfrac{1.1}{1 + \dfrac{10^5}{RQ} + \dfrac{10^5}{R_{IN}}}\right] + 0.1\,\omega_1\omega_2}$$

$$\omega_1 = \frac{10^9}{R_{F1}} \qquad \omega_2 = \frac{10^9}{R_{F2}} \qquad \omega_0 = \sqrt{0.1\,\omega_1\omega_2}$$

$$\omega_Z = \omega_0\sqrt{\frac{10\,R_h}{R_l}}$$

$$\left.\frac{e_n}{e_{IN}}\right|_{s \to 0} = \frac{11}{\left(1 + \dfrac{R_{IN}}{10^5} + \dfrac{R_{IN}}{RQ}\right)}\frac{R_g}{R_l}$$

$$\left.\frac{e_n}{e_{IN}}\right|_{s \to \infty} = \frac{1.1}{\left(1 + \dfrac{R_{IN}}{10^5} + \dfrac{R_{IN}}{RQ}\right)}\frac{R_g}{R_h}$$

$$\left.\frac{e_n}{e_{IN}}\right|_{\omega = \omega_Z} = 0$$

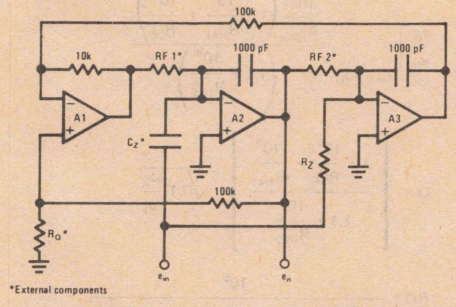

FIGURE 7. Input Notch Using Three Amplifiers

j) Input notch *(Figure 7)* transfer function equations are:

$$\frac{e_n}{e_{IN}} = \frac{-\dfrac{C_Z}{10^{-9}}\left[s^2 + \omega_Z{}^2\right]}{s^2 + s\,\omega_1\left[\dfrac{1.1\,RQ}{10^5 + RQ}\right] + \omega_0{}^2}$$

$$\omega_1 = \frac{10^9}{R_{F1}} \qquad \omega_2 = \frac{10^9}{R_{F2}}$$

$$\omega_Z = \omega_0\sqrt{\frac{RF2 \times 10^{-9}}{R_Z\,C_Z}} \qquad \omega_0 = \sqrt{0.1\,\omega_1\omega_2}$$

$$\left.\frac{e_n}{e_{IN}}\right|_{\omega \to 0} = -\frac{R_{F2}}{R_Z}$$

$$\left.\frac{e_n}{e_{IN}}\right|_{\omega \to \infty} = -\frac{C_Z}{10^{-9}}$$

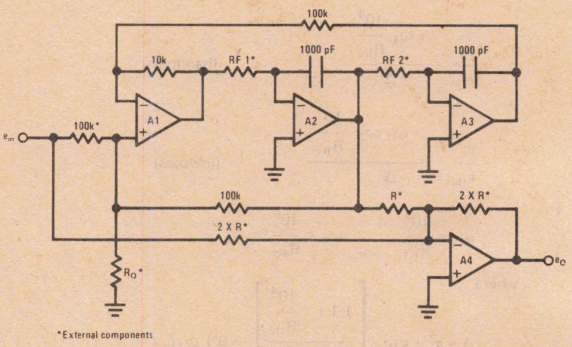

FIGURE 8. Allpass

g) Allpass *(Figure 8)* transfer function equations are:

$$\frac{e_o}{e_{IN}} = -\left[\frac{s^2 - s\,\omega_1\left[\dfrac{1.1}{2 + \dfrac{R_{IN}}{RQ}}\right] + \omega_0{}^2}{s^2 + s\,\omega_1\left[\dfrac{1.1}{2 + \dfrac{R_{IN}}{RQ}}\right] + \omega_0{}^2}\right]$$

$$Q = \frac{2 + \dfrac{10^5}{RQ}}{1.1}\sqrt{0.1\,\frac{\omega_2}{\omega_1}}$$

$$\omega_1 = \frac{10^9}{R_{F1}} \qquad \omega_2 = \frac{10^9}{R_{F2}}$$

$$\omega_0 = \sqrt{0.1\,\omega_1\omega_2}$$

Time delay at $\omega_0 = \dfrac{2Q}{\omega_0}$ seconds

FREQUENCY TUNING

To tune the AF160 two resistors are required for frequencies between 200 Hz and 10 kHz. For lower frequencies "T" tuning or addition of external capacitors

Applications Information (Continued)

is required. Using external capacitors allows the user to go as low in frequency as he desires. "T" tuning and external capacitors can be used together.

Two resistor tuning for 200 Hz to 10 kHz

$$R_f = \frac{50.33 \times 10^6}{f_o}\ \Omega$$

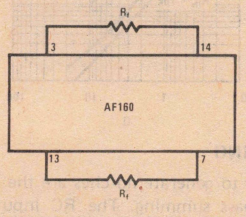

FIGURE 9. Resistive Tuning

GRAPH A. Resistive Tuning

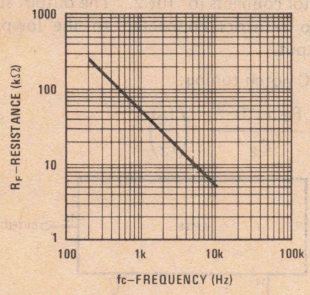

"T" resistive tuning for $f_O < 200$ Hz

$$R_s = \frac{R_t^2}{R_f - 2R_t} \qquad R_t < \frac{R_F}{2}$$

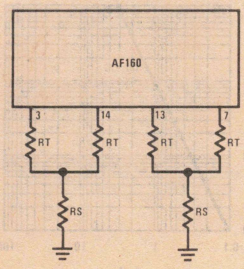

FIGURE 10. T Tuning

GRAPH B. "T" Tuning

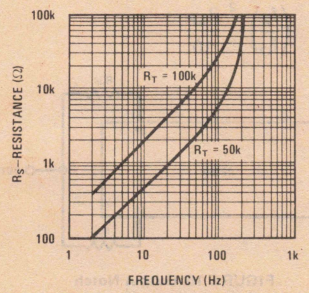

RC tuning for $f_O < 200$ Hz

$$R_f = \frac{0.05033}{f_o\,(C + 1 \times 10^{-9})}$$

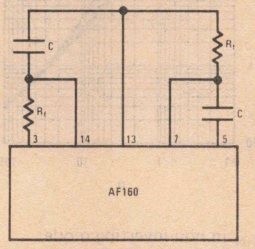

FIGURE 11. Low Frequency RC Tuning

Q TUNING

To tune the Q of an AF160 requires one resistor from pins 1 or 2 to ground. The value of the Q tuning resistor depends on the input connection and input resistance as well as the value of the Q. The Q of the unit is inversely proportional to resistance to ground at pin 1 and directly proportional to resistance to ground from pin 2.

GRAPH C. Q_{MIN}, Non-Inverting Input

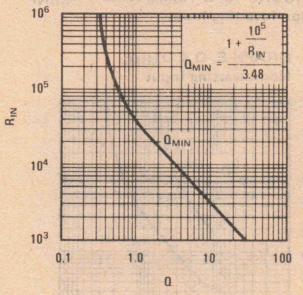

For $Q > Q_{MIN}$ in non-inverting mode:

$$RQ = \frac{10^5}{3.48Q - 1 - \frac{10^5}{R_{IN}}}$$

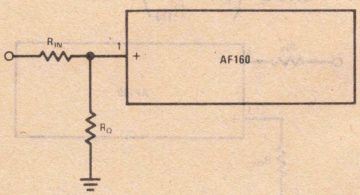

FIGURE 12. Q Tuning for $Q > Q_{MIN}$, Non-Inverting Input

Applications Information (Continued)

GRAPH D. $Q > Q_{MIN}$, Non-Inverting Input

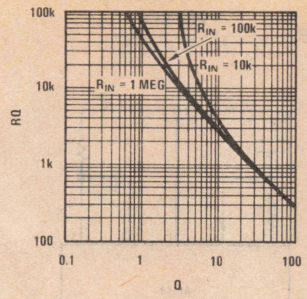

For $Q < Q_{MIN}$ in non-inverting mode:

$$RQ = \frac{10^4}{0.3162 \dfrac{\left(1 + \dfrac{10^5}{R_{IN}}\right)}{Q} - 1.1}$$

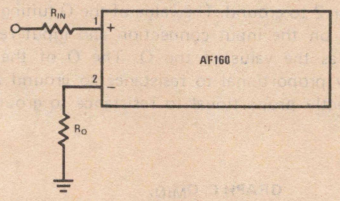

FIGURE 13. Q Tuning for $Q < Q_{MIN}$, Non-Inverting Input

GRAPH E. $Q < Q_{MIN}$, Non-Inverting Input

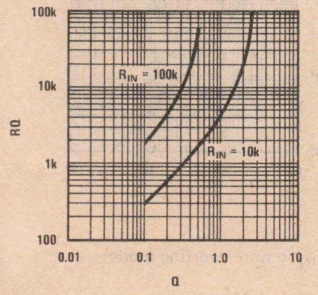

For any Q in inverting mode:

$$RQ = \frac{10^5}{3.16Q \left(1.1 + \dfrac{10^4}{R_{IN}}\right) - 1}$$

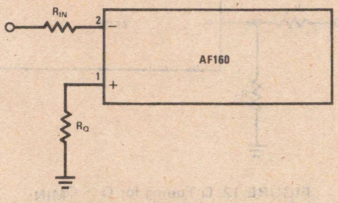

FIGURE 14. Q Tuning Inverting Input

GRAPH F. Q Tuning, Inverting Input

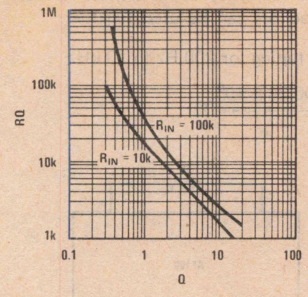

NOTCH TUNING

Two methods to generate notches are the RC input and lowpass/highpass summing. The RC input method requires adding a capacitor and resistor connected to the two integrator inputs. The capacitor connects to "Int 1" and the resistor connects to "Int 2." The output summing requires two resistors connected to the lowpass and highpass output.

For input RC notch tuning:

$$R_Z = \frac{R_F \times 10^{-9}}{C_Z} \left(\frac{f_O}{f_Z}\right)^2$$

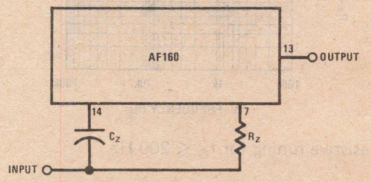

FIGURE 15. Input RC Notch

GRAPH G. Input RC Notch

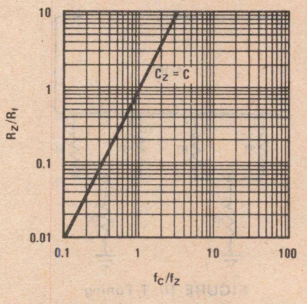

For output notch tuning:

$$R_{HP} = \left(\frac{f_Z}{f_O}\right)^2 \frac{R_{LP}}{10}$$

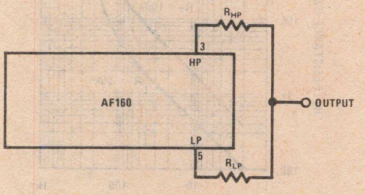

FIGURE 16. Output Notch

Applications Information (Continued)

GRAPH H. Output Notch

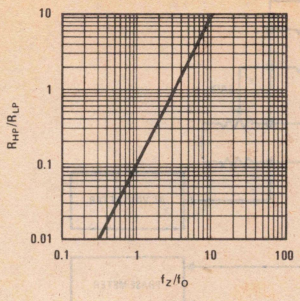

TUNING TIPS

In applications where 2 to 3% accuracy is not sufficient to provide the required filter response, the AF160 stages can be tuned by adding trim pots or trim resistors in series or parallel with one of the frequency determining resistors and the Q determining resistor.

When tuning a filter section, no matter what output configuration is to be used in the circuit, measurements are made between the input and the bandpass (pin 13) output.

Before any tuning is attempted the lowpass (pin 7) output should be checked to see that the output is not clipping. At the center frequency of the section the lowpass output is 10 dB higher than the bandpass output and 20 dB higher than the highpass. This should be kept in mind because if clipping occurs the results obtained when tuning will be incorrect.

Frequency Tuning

By adjusting the resistance between pins 7 and 13 the center frequency of a section can be adjusted. If the input is through pin 1 the phase shift at center frequency will be 180° and if the input is through pin 2 the phase shift at center frequency will be 0°. Adjusting center frequency by phase is the most accurate but tuning for maximum gain is also correct.

"Q" Tuning

The "Q" is tuned by adjusting the resistance between pin 1 or 2 and ground. Low Q tuning resistors will be from pin 2 to ground ($Q < 0.6$). High Q tuning resistors will be from pin 1 to ground. To tune the Q correctly the signal source must have an output impedance very much lower than the input resistance of the filter since the input resistance affects the Q. The input must be driven through the same resistance the circuit will see to obtain precise adjustment.

The lower 3 dB (45°) frequency, f_L, and the upper 3 dB (45°) frequency, f_H, can be calculated by the following equations:

$$f_H = \left(\frac{1}{2Q} + \sqrt{\left(\frac{1}{2Q}\right)^2 + 1}\right) \times (f_O)$$

where f_O = center frequency

$$f_L = \left(\sqrt{\left(\frac{1}{2Q}\right)^2 + 1} - \frac{1}{2Q}\right) \times (f_O)$$

When adjusting the Q, set the signal source to either f_H or f_L and adjust for 45° phase change or a 3 dB gain change.

Notch Tuning

If a circuit has a jw axis zero pair the notch can be tuned by adjusting the ratio of the summing resistors (lowpass/highpass summing) or the input resistance (input RC).

In either case the signal is connected to the input and the proper resistor is adjusted for a null at the output.

Special Cases

When using the input RC notch the unit cannot be tuned through the normal input so an additional 100k resistor can be added at pin 1 and the unit can be tuned normally. Then the 100k input resistor should be grounded and the notch tuned through the normal RC input.

An alternative way of tuning is to tune using the Q resistor as the input. This requires the Q resistor be lifted from ground and connecting the signal source to the normally grounded end of the Q resistor. This has the problem that when the Q resistor is grounded after tuning, its value is decreased by the output impedance of the source. This technique has the advantage of not requiring an additional resistor.

TUNING PROCEDURE (See *Figure 17*)

Center Frequency Tuning

Set oscillator to center frequency desired for the filter section, adjust amplitude and check that clipping does not occur at the lowpass output pin 5.

Adjust the resistance between pins 13 and 7 until the phase shift between input and bandpass output is 180°.

Q Tuning

Set oscillator to upper or lower 45° frequency (see tuning tips) and tune the Q resistor until the phase shift is 135° (upper 45° frequency) or 225° (lower 45° frequency).

Zero Tuning

Set the oscillator output to the zero frequency and tune the zero resistor for a null at the output of the summing amplifier.

Gain Adjust

Set the oscillator to any desired frequency and the gain can be adjusted by measuring the output of the summing amplifier and adjusting the feedback resistance.

Applications Information (Continued)

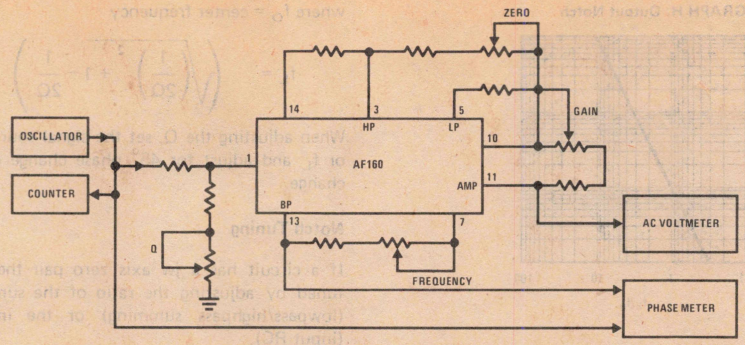

FIGURE 17. Filter Tuning Setup

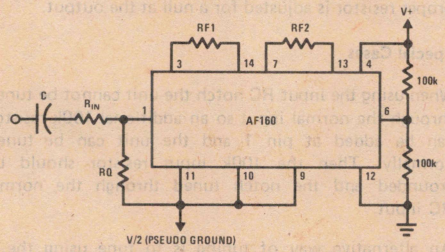

FIGURE 18. Single Power Supply Connection Using Uncommitted Amplifier to Split Supply

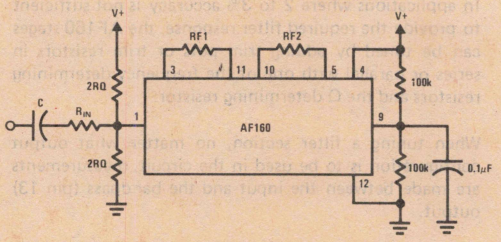

FIGURE 19. Single Power Supply Connection Using Resistive Dividers

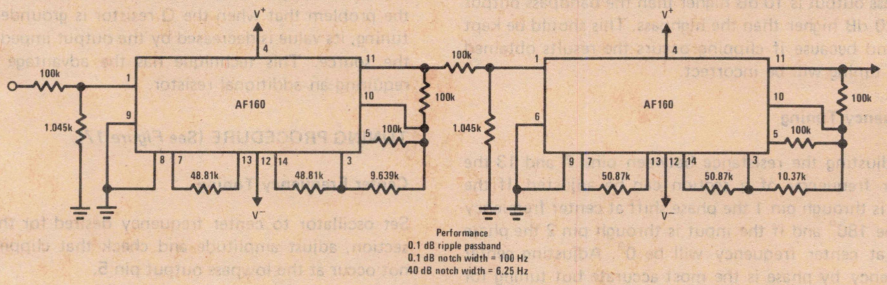

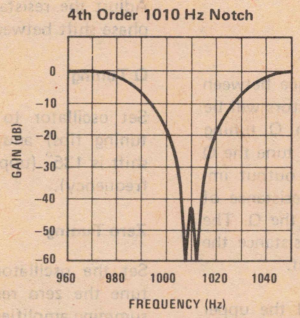

STAGE 1

F_c = 1031.1 Hz
Q = 28.34
F_z = 1012.2 Hz

STAGE 2

F_c = 989.3 Hz
Q = 28.34
F_z = 1007.8 Hz

FIGURE 20. 1010 Hz Notch—Telephone Holding Tone Reject Filter

FILTER DESIGN

Since most filter tables are in terms of a normalized lowpass prototype, the filter to be designed is usually reduced to a lowpass prototype. After the lowpass transfer function is found, it is transformed to obtain the transfer function for the actual filter desired. *Graph I* shows the lowpass amplitude response which can be defined by four quantities.

Applications Information (Continued)

GRAPH I. Lowpass Prototype Response

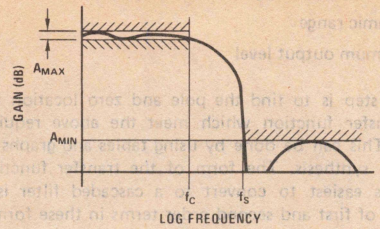

A_{MAX} = the maximum peak to peak ripple in the passband.

A_{MIN} = the minimum attenuation in the stopband.

f_C = the passband cutoff frequency.

f_S = the stopband start frequency.

By defining these four quantities for the lowpass prototype the normalized pole and zero locations and the Q (quality) of the poles can be determined from tables or by computer programs.

To obtain the lowpass prototype for the highpass filter (*Graph J*) A_{MAX} and A_{MIN} are the same as for the lowpass case but $f_C = 1/f_2$ and $f_S = 1/f_1$.

GRAPH J. Highpass Response

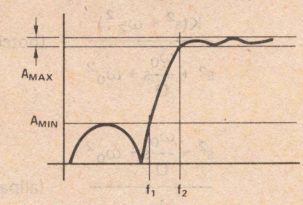

To obtain the lowpass prototype for a bandpass filter (*Graph K*) A_{MAX} and A_{MIN} are the same as for the lowpass case but

$$f_C = 1 \quad f_S = \frac{f_5 - f_1}{f_4 - f_2}$$

where $f_3 = \sqrt{f_1 f_5} = \sqrt{f_2 f_4}$ i.e. geometric symmetry

$f_5 - f_1$ = A_{MIN} bandwidth
$f_4 - f_2$ = Ripple bandwidth

GRAPH K. Bandpass Response

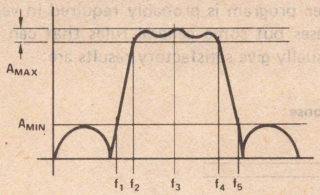

To obtain the lowpass prototype for the notch filter (*Graph L*) A_{MAX} and A_{MIN} are the same as for the lowpass case and

$$f_C = 1 \qquad f_S = \frac{f_5 - f_1}{f_4 - f_2}$$

where $f_3 = \sqrt{f_1 f_5} = \sqrt{f_2 f_4}$

GRAPH L. Notch Response

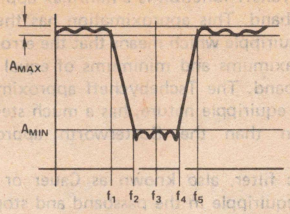

Normalized Lowpass Transformed To Un-Normalized Lowpass

The normalized lowpass filter has the passband edge normalized to unity. The un-normalized lowpass filter instead has the passband edge at f_C. The normalized and un-normalized lowpass filters are related by the transformation $s = s\omega_c$. This transforms the normalized passband edge $s = j$ to the un-normalized passband edge $s = j\omega_C$.

Normalized Lowpass Transformed To Un-Normalized Highpass

The transformation that can be used for lowpass to highpass is $S = \omega_C/s$. Since S is inversely proportional to s, the low frequency and high frequency responses are interchanged. The normalized lowpass $1/(S^2 + S/Q+1)$ transforms to the un-normalized highpass

$$\frac{s^2}{s^2 + \frac{\omega_C}{Q}s + \omega_C{}^2}$$

Normalized Lowpass Transformed To Un-Normalized Bandpass

The transformation that can be used for lowpass to bandpass is $S = (s^2 + \omega_0{}^2)$ BWs where $\omega_0{}^2$ is the center frequency of the desired bandpass filter and BW is the ripple bandwidth.

Normalized Lowpass Transformed To Un-Normalized Bandstop (Or Notch)

The bandstop filter has a reciprocal response to a bandpass filter. Therefore a bandstop filter can be obtained by first transforming the lowpass prototype to a highpass and then performing the bandpass transformation.

SELECTION OF TRANSFER FUNCTION

The selection of a function which approximates the shape of the response desired is a complicated process. Except in the simplest cases it requires the use of tables or computer programs. The form of the transfer function desired is in terms of the pole and zero locations. The most common approximations found in tables are Butterworth, Tschebycheff, Elliptic, and Bessel. The decision as to which approximation to use is usually a function of the requirements and system objectives. Butterworth filters are the simplest but have the disadvantage of requiring high order transfer functions to obtain sharp roll-offs.

Applications Information (Continued)

The Tschebycheff function is a min/max approximation in the passband. This approximation has the property that it is equiripple which means that the error oscillates between maximums and minimums of equal amplitude in the passband. The Tschebycheff approximation, because of its equiripple nature, has a much steeper transition region than the Butterworth approximation.

The elliptic filter, also known as Cauer or Zolotarev filters, are equiripple in the passband and stopband and have a steeper transition region than the Butterworth or the Tschebycheff.

For a specific lowpass filter three quantities can be used to determine the degree of the transfer function: the maximum passband ripple, the minimum stopband attenuation, and the transition ratio ($tr = \omega_S/\omega_C$). Decreasing A_{MAX}, increasing A_{MIN}, or decreasing tr will increase the degree of the transfer function. But for the same requirements the elliptic filter will require the lowest order transfer function. Tables and graphs are available in reference books such as "Reference Data for Radio Engineers," Howard W. Sams & Co., Inc., 5th Edition, 1970 and Erich Christian and Egon Eisenmann, "Filter Design Tables and Graphs," John Wiley and Sons, 1966.

For specific transfer functions and their pole locations such text as Louis Weinberg, "Network Analysis and Synthesis," McGraw Hill Book Company, 1962 and Richard W. Daniels, "Approximation Methods for Electronic Filter Design," McGraw-Hill Book Company, 1974, are available.

DESIGN OF CASCADED MULTISECTION FILTERS

The first step in designing is to define the response required and define the performance specifications:

1. Type of filter:
   Lowpass, highpass, bandpass, notch, allpass
2. Attenuation and frequency response
3. Performance
   Center frequency/corner frequency plus tolerance and stability

   Insertion loss/gain plus tolerance and stability

   Source impedance

   Load impedance

   Maximum output noise

   Power consumption

   Power supply voltage

   Dynamic range

   Maximum output level

Second step is to find the pole and zero location for the transfer function which meet the above requirements. This can be done by using tables and graphs or network synthesis. The form of the transfer function which is easiest to convert to a cascaded filter is a product of first and second order terms in these forms:

First Order	Second Order	
$\dfrac{K}{s+\omega_R}$	$\dfrac{K}{s^2+\dfrac{\omega_0}{Q}s+\omega_0^2}$	(low pass)
$\dfrac{Ks}{s+\omega_R}$	$\dfrac{Ks^2}{s^2+\dfrac{\omega_0}{Q}s+\omega_0^2}$	(highpass)
	$\dfrac{Ks}{s^2+\dfrac{\omega_0}{Q}s+\omega_0^2}$	(bandpass)
	$\dfrac{K(s^2+\omega_Z^2)}{s^2+\dfrac{\omega_0}{Q}s+\omega_0^2}$	(notch)
	$\dfrac{s^2-\dfrac{\omega_0}{Q}s+\omega_0^2}{s^2+\dfrac{\omega_0}{Q}s+\omega_0^2}$	(allpass)

Each of the second order functions is realizable by tuning an AF160 stage. By cascading these stages the desired transfer function is realized.

CASCADING SECOND ORDER STAGES

The primary concern in cascading second order stages is to minimize the maximum difference in amplitude from input to output over the frequencies of interest. A computer program is probably required in very complicated cases but some general rules that can be used that will usually give satisfactory results are:

GRAPH M. Generalized Model Response

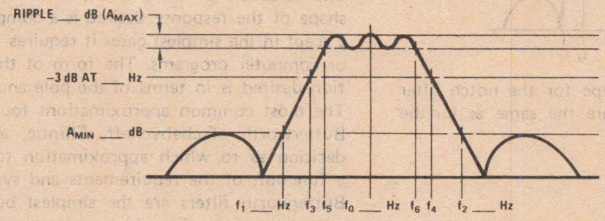

Applications Information (Continued)

1. The highest "Q" pole pair should be paired with the zero pair closest in frequency.
2. If highpass and lowpass stages are cascaded the lowpass sections should be the higher frequency and highpass sections the lower frequency.
3. In cascaded filters of more than two sections the first section should be the section with "Q" closest to 0.707 and then additional stages should be added in order of least difference between first stage Q and their Q.

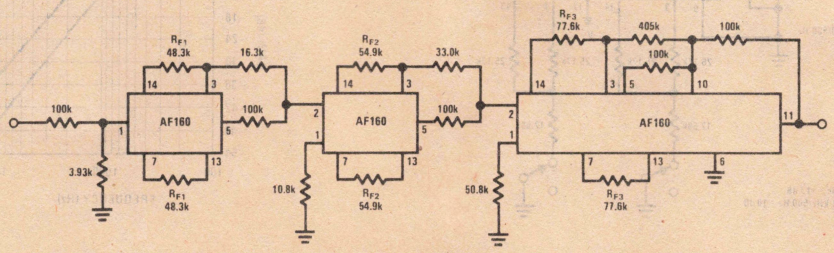

Lowpass Elliptic Filter

$F_C = 1$

$F_S = 1.3$

$A_{MAX} = 0.1$ dB

$A_{MIN} = 40$ dB

$N = 6$

$f_{O1} = 1.0415 \quad Q_1 = 7.88 \quad f_{Z1} = 1.329 \quad f_Z/f_O = 1.28 \quad \left(\frac{f_Z}{f_O}\right)^2 = 1.63$

$f_{O2} = 0.9165 \quad Q_2 = 1.79 \quad f_{Z2} = 1.664 \quad f_Z/f_O = 1.82 \quad \left(\frac{f_Z}{f_O}\right)^2 = 3.30$

$f_{O3} = 0.649 \quad Q_3 = 0.625 \quad f_{Z3} = 4.1285 \quad f_Z/f_O = 6.36 \quad \left(\frac{f_Z}{f_O}\right)^2 = 40.5$

$$R_{F1} = \frac{(503.3)}{f_{O1} \times f_C} \times 10^5 \quad R_{F2} = \frac{(503.3)}{f_{O2} \times f_C} \times 10^5 \quad R_{F3} = \frac{(503.3)}{f_{O3} \times f_C}$$

at 1000 Hz = f_C

$R_{F1} = 48.3k \qquad R_{F2} = 54.9k \qquad R_{F3} = 77.6k$

6th Order Elliptic Filter

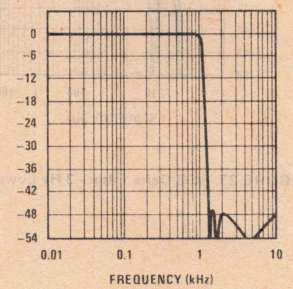

FIGURE 21. Lowpass Elliptic Filter Example

Applications Information (Continued)

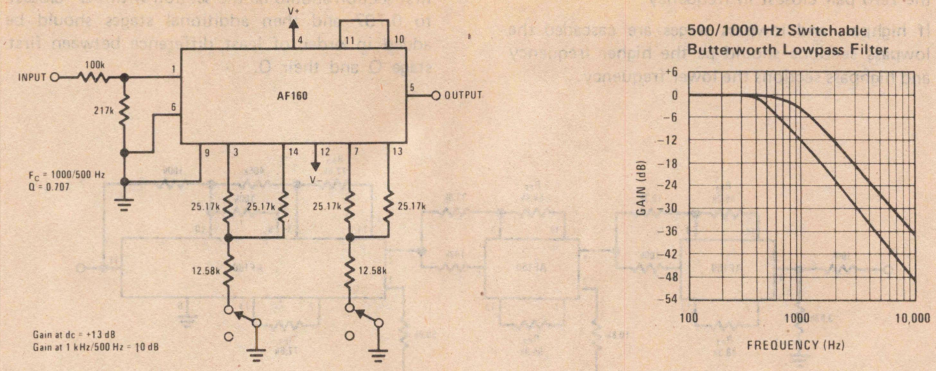

FIGURE 22. Switchable Filter Example: 500 Hz/1000 Hz Butterworth Lowpass

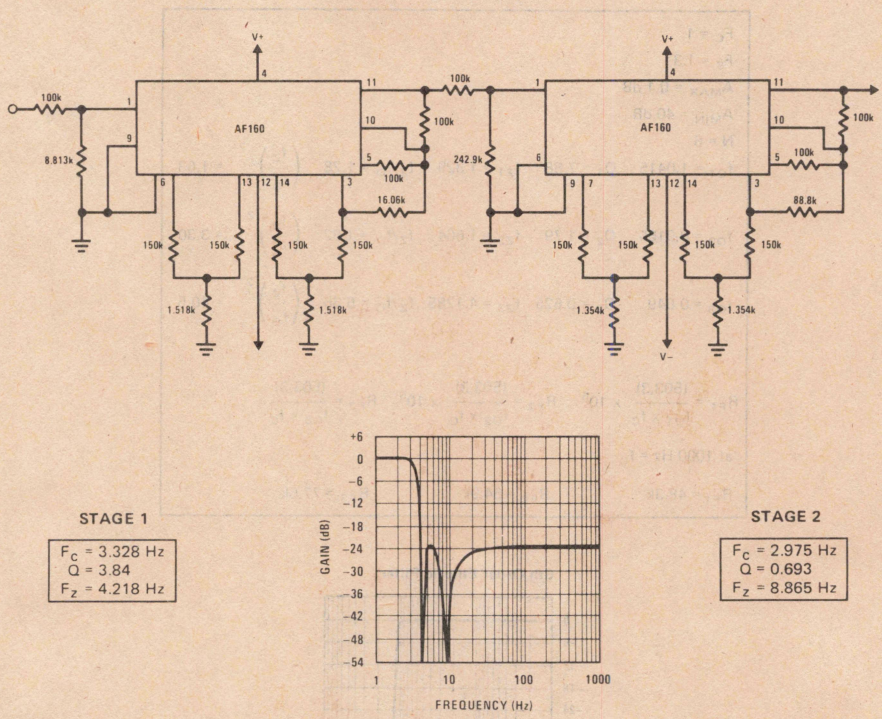

STAGE 1

F_C = 3.328 Hz
Q = 3.84
F_Z = 4.218 Hz

STAGE 2

F_C = 2.975 Hz
Q = 0.693
F_Z = 8.865 Hz

FIGURE 23. EEG Delta Filter—3 Hz Lowpass

Applications Information (Continued)

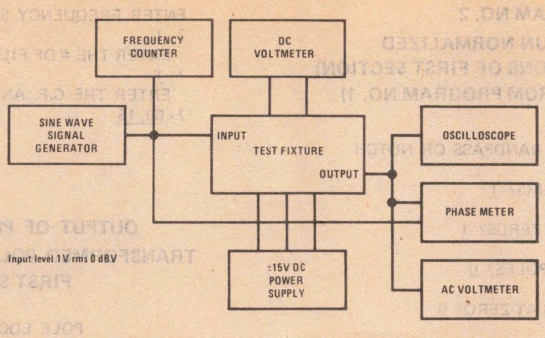

FIGURE 25. Test Circuit Block Diagram

COMPUTER AIDED DESIGN EXAMPLE*

This design is an example of a 60 Hz notch filter. The response is to have the following specifications:

Maximum passband ripple 0.1 dB

Minimum rejection 35 dB

0.1 dB bandwidth 15 Hz max

−35 dB bandwidth 1.5 Hz min

The steps in the design of this filter are:

1. Design a lowpass "prototype" for the filter.
2. Transformation of the lowpass prototype into a notch filter design.
3. Using the pole and zero locations found in step two calculate the value of the resistors required to build the filter.
4. Draw a schematic of filter using values obtained in step three.

*Computer programs shown are user interactive. Underlined copy is user input, non-underlined copy is computer response, and line indications in parenthesis are included for easy identification of data common to several programs.

PROGRAM NO. 1

```
RUN

THIS PROGRAM DESIGNS BUTTERWORTH CHEBYCHEFF OR ELLIPTIC NORMALIZED
LOWPASS FILTERS
WHAT TYPE OF FILTER ? B-C-E

ELLIPTIC
 DO YOU KNOW THE ORDER OF THE FILTER ? Y/N
? NO
INPUT FC,FS,AMAX,AMIN
? 1, 10, .1, 35
      FC            1.000
      FS           10.000
      AMAX           .100
      AMIN         35.000
      N             2.000
      ATT AT FS   -35.671    (ATTENUATION IN dB)
IS THIS SATISFACTORY ? Y/N
? YES

      F                Q
      1.823 (Line 1.1)      .775 (Line 1.2)
      Z
      14.124 (Line 1.3)
```

Applications Information (Continued)

PROGRAM NO. 2
(DETERMINES UN-NORMALIZED POLE + ZERO LOCATIONS OF FIRST SECTION) (DATA ENTERED FROM PROGRAM NO. 1)

```
RUN
WHAT TYPE FILTER BANDPASS OR NOTCH
? NOTCH
ENTER # OF POLE PAIRS? 1

ENTER # OF JW AXIS ZEROS? 1

  ENTER # OF REAL POLES? 0

  ENTER # OF ZEROS AT ZERO? 0

  ENTER # OF COMPLEX ZEROS? 0

ENTER # OF REAL ZEROS? 0

  ENTER F & Q OF EACH POLE PAIR
? 1.823, .775  (FROM LINE 1.1 AND LINE 1.2)

ENTER VALUES OF JW AXIS ZEROS
? 14.124  (FROM LINE 1.3)

ENTER FREQUENCY SCALING FACTOR
? 1
  ENTER THE # OF FILTERS TO BE DESIGNED
? 1
  ENTER THE C.F. AND BW OF EACH FILTER
? 60, 15
```

OUTPUT OF PROGRAM NO. 2
TRANSFORMED POLE/ZERO LOCATIONS FIRST SECTION

```
POLE LOCATIONS
CENTER FREQ.                    Q

56.93601   (From Line 2.3)   11.31813   (From Line 2.4)
63.228877  (From Line 2.5)   11.31813   (From Line 2.6)
          JW AXIS ZEROS

59.471339  (From Line 2.1)
60.533361  (From Line 22
```

PROGRAM NO. 3
(CHECK OF FILTER RESPONSE USING PROGRAM NO. 2 DATA BASE)

```
RUN

NUMERATOR (ZEROS)
A(I)S^2+R(I)S+Z(I)^2
 1     0     59.471339     (From Line 2.1)
 1     0     60.533361     (From Line 2.2)

REAL POLE

COMPLEX POLE PAIRS

          F          Q
1      56.93601   11.31813   (From Lines 2.3 and 2.4)
2      63.228877  11.31813   (From Lines 2.5 and 2.6)
```

RUN

FREQUENCY	NOR. GAIN (DB)	PHASE	DELAY	NOR. DELAY	FREQUENCY	NOR. GAIN (DB)	PHASE	DELAY	NOR. DELAY
40.000	.032	347.69	.002275	5.847169	60.600	−47.102	169.17	.050801	108.232021
45.000	.060	342.20	.004107	8.749738	60.800	−33.650	165.48	.051677	110.096278
50.000	.100	330.70	.009983	21.268142	61.000	−27.577	161.72	.052809	112.508334
55.000	−.795	290.54	.046620	99.324027	61.200	−23.418	157.87	.054167	115.403169
56.000	−2.298	270.61	.063945	136.234562	61.400	−20.198	153.92	.055712	118.694436
57.000	−5.813	245.51	.072894	155.299278	61.600	−17.554	149.85	.057391	122.270086
58.000	−12.748	220.19	.065758	140.096912	61.800	−15.308	145.65	.059136	125.989157
58.200	−14.740	215.54	.063369	135.006390	62.000	−13.362	141.33	.060869	129.681062
58.400	−17.032	211.06	.060979	129.914831	63.000	−6.557	118.23	.065975	140.559984
58.600	−19.722	206.76	.058692	125.043324	64.000	−2.936	95.30	.059402	126.556312
58.800	−22.983	202.61	.056588	120.561087	65.000	−1.215	76.38	.045424	96.774832
59.000	−27.172	198.60	.054724	116.589928	66.000	−.463	62.43	.032614	69.484716
59.200	−33.235	194.72	.053139	113.212012	67.000	−.138	52.44	.023498	50.062947
59.400	−46.300	190.94	.051856	110.478482	70.000	.091	35.43	.010452	22.267368
59.600	−42.909	7.24	.050888	108.417405	75.000	.085	23.44	.004250	9.054574
59.800	−36.897	3.60	.050242	107.040235	80.000	.060	17.80	.002310	4.921727
60.00	−35.567	360.00	.049916	106.346516	85.000	.043	14.50	.001460	3.110493
60.200	−36.887	356.41	.049907	106.326777	90.000	.032	12.31	.001011	2.154297
60.400	−42.757	352.81	.050206	106.963750					

PROGRAM NO. 4

DESIGN OF FIRST SECTION

```
>RUN
WHICH FILTER AF160-J OR G ?
? J
WHAT TYPE OF FILTER SECTION? HIGHPASS-BANDPASS-LOWPASS-NOTCH-ALLPASS
? NOTCH
INPUT FC AND Q VALUES
? 56.93601, 11.31813   (FROM LINES 2.3 AND 2.4)
INPUT REAL POLE AND CAPACITOR VALUES IF NONE ENTER 0
? 0
INPUT ZERO LOCATION
? 59.471339   (FROM LINE 2.1)
ARE TUNING INSTRUCTIONS REQUIRED ?
? YES
```

TUNING INSTRUCTION

PHASE SHIFT FROM INPUT TO PIN 13 SHOULD BE 180 DEG. AT 56.93601 HZ.
IF TUNING IS REQUIRED, RF2 FROM PINS 7 TO 13 SHOULD BE ADJUSTED.
PHASE SHIFT FROM INPUT TO PIN 13 SHOULD BE 135 DEG. AT 59.506798HZ.
OR 225 DEG. AT 54.476284 HZ.
IF TUNING IS REQUIRED RQ FROM 1 OR 2 TO GROUND SHOULD BE ADJUSTED
GAIN AT PIN 11 AT 59.471339 SHOULD BE 0 IF NOT
ADJUST RHP FROM PIN 3 TO 10 FOR NULL

FC= 56.93601 Q= 11.31813 F(L-3DB) = 54.476284 F(H-3DB) = 59.506798

GAIN AT F>> FC= .00DB

FUNCTION	CONNECTION FROM	TO	VALUE OF EXTERNAL RESISTORS IN OHMS
R IN	INPUT	1	100000.000
RQ	1	GND	2675.931
RF1	3	14	883960.996
RF2	7	13	883960.996
RLP	5	10	100000.000
RHP	3	10	10910.418
RG	10	11	357910.697
+V		4	
−V		12	
GND		9	
GND		6	
OUTPUT	PIN 11		

Applications Information (Continued)

PROGRAM NO. 4

DESIGN OF SECOND SECTION

WHAT TYPE OF FILTER SECTION? HIGHPASS-BANDPASS-LOWPASS-NOTCH-ALLPASS
? NOTCH
INPUT FC AND Q VALUES
? 63.228877, 11.31813 *(FROM LINES 2.5 AND 2.6)*
INPUT REAL POLE AND CAPACITOR VALUES IF NONE ENTER 0
? 0
INPUT ZERO LOCATION
? 60.533361 *(FROM LINE 2.2)*
ARE TUNING INSTRUCTIONS REQUIRED ?
? YES

TUNING INSTRUCTION

PHASE SHIFT FROM INPUT TO PIN 13 SHOULD BE 180 DEG. AT 63.228877 HZ.
IF TUNING IS REQUIRED RF2 FROM PINS 7 TO 13 SHOULD BE ADJUSTED
PHASE SHIFT FROM INPUT TO PIN 13 SHOULD BE 135 DEG. AT 66.083802 HZ.
OR 225 DEG. AT 60.497289 HZ.
IF TUNING IS REQUIRED RQ FROM 1 OR 2 TO GROUND SHOULD BE ADJUSTED
GAIN AT PIN 11 AT 60.533361 SHOULD BE 0 IF NOT
ADJUST RHP FROM PIN 3 TO 10 FOR NULL

FC= 63.228877 Q= 11.31813 F⟨L-3DB⟩= 60.497289 F⟨H-3DB⟩= 66.083802

GAIN AT F⟨⟨FC= .00DB

FUNCTION	CONNECTION FROM	TO	VALUE OF EXTERNAL RESISTORS IN OHMS
R IN	INPUT	1	100000.000
RQ	1	GND	2675.931
RF1	3	14	795984.596
RF2	7	13	795984.596
RLP	5	10	100000.000
RHP	3	10	9165.552
RG	10	11	328044.920
+V		4	
−V		12	
GND		9	
GND		6	
OUTPUT	PIN 11		

Applications Information (Continued)

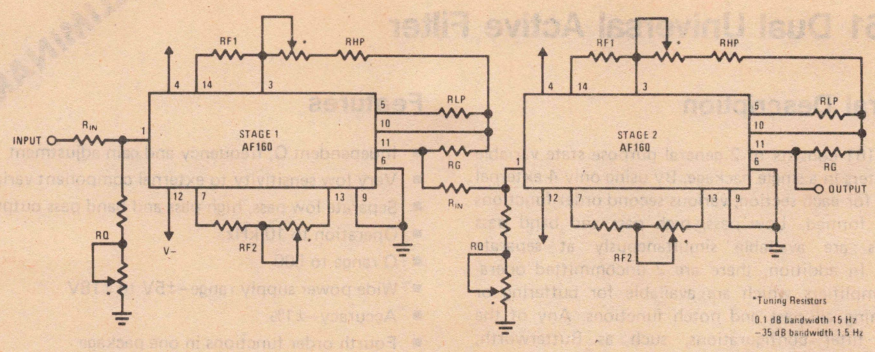

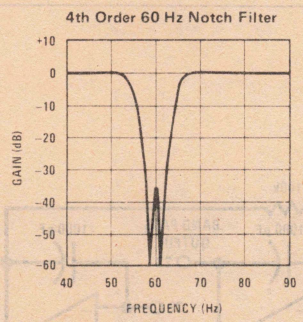

FIGURE 26. Implementation of a 60 Hz Notch From Computer Calculations

DEFINITION OF TERMS

A_{MAX}	Maximum passband peak-to-peak ripple
A_{MIN}	Minimum stopband loss
f_Z	Frequency of jw axis pair
f_O	Frequency of complex pole pair
Q	Quality of pole
f_C	Passband edge
f_S	Stopband edge
A_{HP}	Gain from input to highpass output
A_{BP}	Gain from input to bandpass output
A_{LP}	Gain from input to lowpass output
A_{AMP}	Gain from input to output of amplifier
R_f	Pole frequency determining resistance
R_Z	Zero Frequency determining resistance
R_Q	Pole Quality determining resistance
f_H	Frequency above center frequency at which the gain decreases by 3 dB for a bandpass filter
f_L	Frequency below center frequency at which the gain decreases by 3 dB for a bandpass filter
BW	The bandwidth of a bandpass filter
N	Order of the denominator of a transfer function

BIBLIOGRAPHY:

R. W. Daniels: *"Approximation Methods for Electronic Filter Design,"* McGraw-Hill Book Co., New York, 1974

G. S. Moschytz: *"Linear Integrated Networks Design,"* Van Norstrand Reinhold Co., New York, 1975

E. Christian and E. Eisenmann, *"Filter Design Tables and Graphs,"* John Wiley & Sons, New York, 1966

A. I. Zverev, *"Handbook of Filter Synthesis,"* John Wiley & Sons, New York, 1967

Burr-Brown Research Corp., *"Handbook of Operational Amplifier Design and Applications,"* McGraw-Hill Book Co., New York, 1971

National Semiconductor

Active Filters

PRELIMINARY

AF161 Dual Universal Active Filter

General Description

The AF161 consists of 2 general purpose state variable active filters in a single package. By using only 4 external resistors for each section, various second order functions may be formed. Low pass, high pass and band pass functions are available simultaneously at separate outputs. In addition, there are 2 uncommitted operational amplifiers which are available for buffering or for forming all pass and notch functions. Any of the classical filter configurations, such as Butterworth, Bessel, Cauer and Chebyshev can be easily formed.

Features

- Independent Q, frequency and gain adjustment
- Very low sensitivity to external component variation
- Separate low pass, high pass and band pass outputs
- Operation to 10 kHz
- Q range to 500
- Wide power supply range—±5V to ±18V
- Accuracy—±1%
- Fourth order functions in one package

Circuit Diagrams

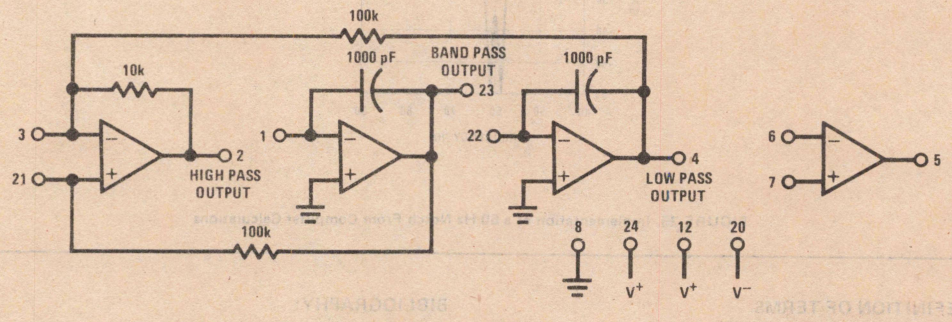

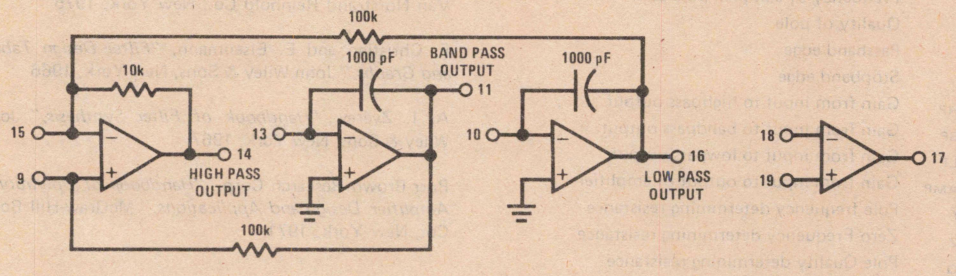

Ceramic Dual-In-Line Package HY24A
AF161-1CJ
AF161-2CJ

Absolute Maximum Ratings

Supply Voltage	±18V
Power Dissipation	900 mW/Package
Differential Input Voltage	±36V
Output Short-Circuit Duration (Note 1)	Infinite
Operating Temperature	−25°C to +85°C
Storage Temperature	−25°C to +100°C
Lead Temperature (Soldering, 10 seconds)	300°C

Electrical Characteristics (Complete Active Filter)

Specifications apply for V_S = ±15V and over −25°C to +85°C unless otherwise specified. (Specifications apply for each section).

PARAMETER	CONDITIONS	MIN	TYP	MAX	UNITS
Frequency Range	$f_c \times Q \leqslant 200{,}000$			100k	Hz
Q Range	$f_c \times Q \leqslant 200{,}000$			500	Hz/Hz
f_o Accuracy					
AF161-1C	$f_c \times Q \leqslant 40{,}000$, T_A = 25°C			±2.5	%
AF161-2C	$f_c \times Q \leqslant 40{,}000$, T_A = 25°C			±1.0	%
f_o Temperature Coefficient			±50	±150	ppm/°C
Q Accuracy	$f_c \times Q \leqslant 10{,}000$, T_A = 25°C			±7.5	%
Q Temperature Coefficient			±300	±750	ppm/°C
Power Supply Current	V_S = ±15V		14.4	22	mA

Electrical Characteristics (Internal Op Amp) (Note 2)

PARAMETER	CONDITIONS	MIN	TYP	MAX	UNITS
Input Offset Voltage	$R_S \leqslant 10\,k\Omega$ @ 25°C		5	10	mV
Input Offset Current			25	100	pA
Input Bias Current			50	200	pA
Large Signal Voltage Gain	$R_L \geqslant 2k$, V_{OUT} = ±10V	25	100		V/mV
Output Voltage Swing	$R_L = 10\,k\Omega$	±12	±13.5		V
Input Voltage Range		±11	+15/−12		V
Common-Mode Rejection Ratio	$R_S \leqslant 10\,k\Omega$	70	100		dB
Supply Voltage Rejection Ratio	$R_S \leqslant 10\,k\Omega$	70	100		dB
Slew Rate (Unity Gain)			13		V/μs
Small Signal Bandwidth			4		MHz

Note 1: Any of the amplifiers can be shorted to ground indefinitely; however, more than one should not be simultaneously shorted as the maximum junction temperature will be exceeded.

Note 2: Specifications apply for V_S = ±15V, T_A = 25°C.

Applications Information

The AF161 consists of 2 identical filter sections and 2 uncommitted op amps. The op amps may be used for buffering inputs and outputs, summing amplifiers (for notch filter generation), adjusting gain through the filter sections, additional passive networks to create higher order filters, or simply used elsewhere in the user's system.

The design equations given apply to both sections; however, for clarity, only the pin designations for section 1 will be shown in the examples and discussion.

See the AF100 data sheet for additional information on this type of filter.

The design equations assume that the user has knowledge of the frequency and Q values for the particular design to be synthesized. If this is not the case, various references and texts are available to help the user in determining these parameters. A bibliography of recommended texts can also be found in the AF100 data sheet.

CIRCUIT DESCRIPTION AND OPERATION

A schematic of one section of the AF161 is shown in *Figure 1*. Amplifier A1 is a summing amplifier with inputs from integrator A2 to the non-inverting input and integrator A3 to the inverting input. Amplifier A4 is an uncommitted amplifier.

By adding external resistors the circuit can be used to generate the second order system.

$$T(s) = \frac{a_3 s^2 + a_2 s + a_1}{s^2 + b_2 s + b_1}$$

The denominator coefficients determine the complex pole pair location and the quality of the poles where

$\omega_o = \sqrt{b_1}$ = the radian center frequency

$Q = \frac{\omega_o}{b_2}$ = the quality of the complex pole pair

If the output is taken from the output of A1, numerator coefficients a_1 and a_2 equal zero, and the transfer function becomes:

$$T(s) = \frac{a_3 s^2}{s^2 + \frac{\omega_o}{Q} s + \omega_o^2} \qquad \text{(high pass)}$$

If the output is taken from the output of A2, numerator coefficients a_1 and a_3 equal zero and the transfer functions becomes:

$$T(s) = \frac{a_2 s}{s^2 + \frac{\omega_o}{Q} s + \omega_o^2} \qquad \text{(band pass)}$$

If the output is taken from the output of A3, numerator coefficients a_3 and a_2 equal zero and the transfer function becomes:

$$T(s) = \frac{a_1}{s^2 + \frac{\omega_o}{Q} s + \omega_o^2} \qquad \text{(low pass)}$$

Using proper input and output connections the circuit can also be used to generate the transfer functions for a notch and all pass filter.

In the transfer function for a notch function a_2 becomes zero, a_1 equals ω_z^2 and a_3 equals 1. The transfer function becomes:

$$T(s) \quad \frac{s^2 + \omega_z^2}{s^2 + \frac{\omega_o}{Q} s + \omega_o^2} \qquad \text{(notch)}$$

In the all pass transfer function $a_1 = \omega_o^2$, $a_2 = -\omega_o/Q$ and $a_3 = 1$. The transfer function becomes:

$$T(s) \quad \frac{s^2 - \frac{\omega_o}{Q} s + \omega_o^2}{s^2 + \frac{\omega_o}{Q} s + \omega_o^2} \qquad \text{(all pass)}$$

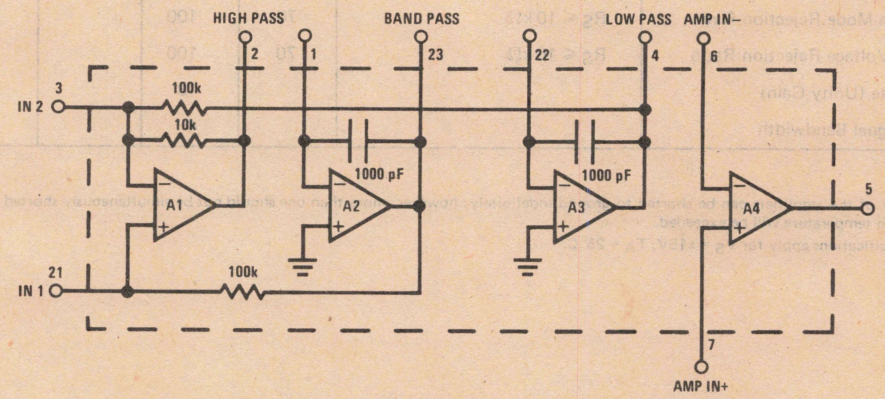

FIGURE 1. AF161 Schematic (Section 1)

Applications Information (Continued)

FREQUENCY CALCULATIONS

For operation above 200 Hz, the frequency of each section of the AF161 is set by 2 equal valued resistors. These resistors couple the output of the first op amp (pin 2) to the input of the second op amp (pin 1) and the output of the second op amp (pin 23) to the input of the third op amp (pin 22).

The value for R_f is given by:

$$R_f = \frac{50.33 \times 10^6}{f_o}\ \Omega \qquad (1)$$

For operation below 200 Hz, "T" tuning should be used as shown in *Figure 3*.

For this configuration,

$$R_S = \frac{R_T^2}{R_f - 2R_T} \qquad (2)$$

where R_T or R_S can be chosen arbitrarily, once R_f is found from equation 1.

Q CALCULATIONS

To set the Q of each section of the AF161, one resistor is required. The value of the Q setting resistor depends on the input connection (inverting or non-inverting) and the input resistance. Because the input resistance does affect the Q, it is often desirable to use one of the uncommitted op amps to provide a buffer between the signal source impedance and the input resistor used to set the Q.

To determine which connection is required for a particular Q, arbitrarily select a value of R_{IN} *(Figure 4)* and calculate Q_{MIN} according to equation 3.

$$Q_{MIN} = \frac{1 + \dfrac{10^5}{R_{IN}}}{3.48} \qquad (3)$$

If the Q required for the circuit is greater than Q_{MIN}, use equation 4 to calculate the value of R_Q and the connection shown in *Figure 4*.

$$R_Q = \frac{10^5}{3.48Q - 1 - \dfrac{10^5}{R_{IN}}} \qquad (4)$$

If the Q required for the circuit is less than Q_{MIN}, use equation 5 to calculate the value of R_Q and the connection shown in *Figure 5*.

$$R_Q = \frac{10^4}{\dfrac{0.3162}{Q}\left(1 + \dfrac{10^5}{R_{IN}}\right) - 1.1} \qquad (5)$$

Both connections shown in *Figures 4 and 5* are "non-inverting" relative to the phase relationship between the input signal and the low pass output.

For any Q, equation 6 may be used with the "inverting" connection shown in *Figure 6*.

$$R_Q = \frac{10^5}{3.16\,Q\left(1.1 + \dfrac{10^4}{R_{IN}}\right) - 1} \qquad (6)$$

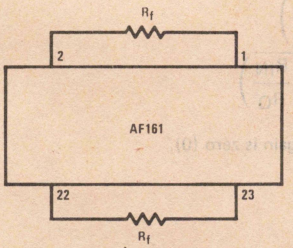

FIGURE 2. Frequency Tuning

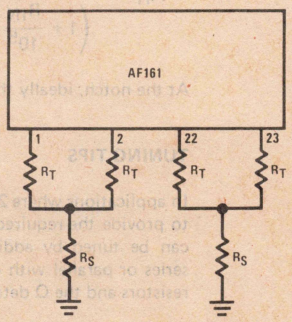

FIGURE 3. "T" Tuning for Low Frequency

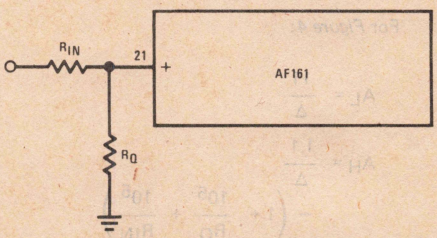

FIGURE 4. Connection for Q > Q_{MIN}

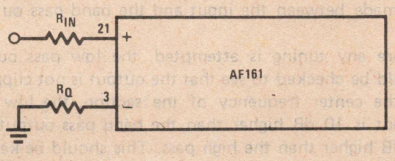

FIGURE 5. Connection for Q < Q_{MIN}

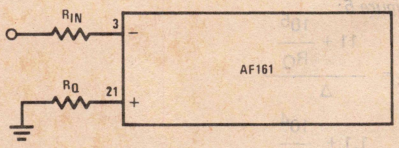

FIGURE 6. Connection for Any Q, Inverting

Applications Information (Continued)

NOTCH TUNING

When the low pass output and the high pass output are summed together, the result is a notch *(Figure 7)*.

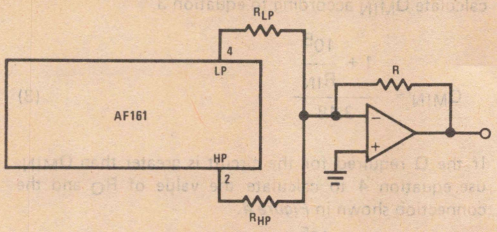

FIGURE 7. Notch Filter

The relationship between R_{LP}, R_{HP}, f_o and f_z, the location of the notch, is given by equation 7.

$$R_{HP} = \left(\frac{f_z}{f_o}\right)^2 \frac{R_{LP}}{10} \qquad (7)$$

Again, it is advantageous to use one of the uncommitted op amps to perform this summing function to prevent loading of this stage or the resistors R_{LP} and R_{HP} from effecting the Q of subsequent stages. Resistor R can be used to set the gain of the filter section.

GAIN CALCULATIONS

The following list of equations will be helpful in calculating the relationship between the external components and various important parameters. The following definitions are use:

A_L – Gain from input to low pass output at DC
A_H – Gain from input to high pass output at high frequency
A_B – Gain from input to band pass output at center frequency

For *Figure 4*:

$$A_L = \frac{11}{\Delta}$$

$$A_H = \frac{1.1}{\Delta}$$

$$A_B = \frac{-\left(1 + \frac{10^5}{R_Q} + \frac{10^5}{R_{IN}}\right)}{\Delta}$$

$$\Delta = 1 + \frac{R_{IN}}{10^5} + \frac{R_{IN}}{R_Q}$$

For *Figure 5:*

$$A_L = \frac{11 + \frac{10^5}{R_Q}}{\Delta}$$

$$A_H = \frac{1.1 + \frac{10^4}{R_Q}}{\Delta}$$

$$A_B = \frac{-\left(1 + \frac{10^5}{R_{IN}}\right)}{\Delta}$$

$$\Delta = 1 + \frac{R_{IN}}{10^5}$$

For *Figure 6:*

$$A_L = -\frac{10^5}{R_{IN}}$$

$$A_H = -\frac{10^4}{R_{IN}}$$

$$A_B = \frac{\frac{10^5}{R_{IN}}\left(1 + \frac{10^5}{R_Q}\right)}{11 + \frac{10^5}{R_{IN}}}$$

For *Figure 7*:

At low frequency, when $f_o < f_z$, the gain to the output of the summing op amp is:

$$A_L = \frac{11\left(\frac{R}{R_{LP}}\right)}{\left(1 + \frac{R_{IN}}{10^5} + \frac{R_{IN}}{R_Q}\right)}$$

At high frequency, when $f_o > f_z$, the gain to the output of the summing op amp is:

$$A_H = \frac{1.1\left(\frac{R}{R_{HP}}\right)}{\left(1 + \frac{R_{IN}}{10^5} + \frac{R_{IN}}{R_Q}\right)}$$

At the notch, ideally the gain is zero (0).

TUNING TIPS

In applications where 2% to 3% accuracy is not sufficient to provide the required filter response, the AF161 stages can be tuned by adding trim pots or trim resistors in series or parallel with one of the frequency determining resistors and the Q determining resistor.

When tuning a filter section, no matter what output configuration is to be used in the circuit, measurements are made between the input and the band pass output.

Before any tuning is attempted, the low pass output should be checked to see that the output is not clipping. At the center frequency of the section, the low pass output is 10 dB higher than the band pass output and 20 dB higher than the high pass. This should be kept in mind because if clipping occurs, the results obtained when tuning will be incorrect.

Applications Information (Continued)

Frequency Tuning

By adjusting resistor R_f, center frequency of a section can be adjusted. Adjusting center frequency by phase is the most accurate but tuning for maximum gain is also correct.

Q Tuning

The Q is tuned by adjusting the R_Q resistor. To tune the Q correctly, the signal source must have an output impedance very much lower than the input resistance of the filter since the input resistance affects the Q. The input must be driven through the same resistance the circuit will "see" to obtain precise adjustment.

The lower 3 dB (45°) frequency, f_L, and the upper 3 dB (45°) frequency, f_H, can be calculated by the following equations:

$$f_H = \left(\frac{1}{2Q} + \sqrt{\left(\frac{1}{2Q}\right)^2 + 1}\right) \times (f_o)$$

where f_o = center frequency

$$f_L = \left(\sqrt{\left(\frac{1}{2Q}\right)^2 + 1} - \frac{1}{2Q}\right) \times (f_o)$$

When adjusting the Q, set the signal source to either f_H or f_L and adjust for 45° phase change or a 3 dB gain change.

Notch Tuning

If a circuit has a jw axis zero pair, the notch can be tuned by adjusting the ratio of the summing resistors (low pass/high pass summing).

In either case, the signal is connected to the input and the proper resistor is adjusted for a null at the output.

TUNING PROCEDURE

Center Frequency Tuning

Set oscillator to center frequency desired for the filter section, adjust amplitude and check that clipping does not occur at the low pass output.

Adjust the R_f resistor until the phase shift between input and band pass output is 180° or 0°, depending upon the connection.

Q Tuning

Set oscillator to upper or lower 45° frequency (see tuning tips) and tune the Q resistor until the phase shift is 135° (upper 45° frequency) or 225° (lower 45° frequency).

Zero Tuning (Notch Tuning)

Set the oscillator output to the zero frequency and tune one of the summing resistors for a null at the output of the summing amplifier.

Gain Adjust

Set the oscillator to any desired frequency and the gain can be adjusted by measuring the output of the summing amplifier and adjusting the feedback resistance.

DESIGN EXAMPLE

Assume 2 band pass filters are required to separate FSK data.

f1 = 800 Hz, Q = 40
f2 = 1000 Hz, Q = 50

The gain through each filter is to be 10 V/V (20 dB).

Since the design is similar for both sections, only the first section design will be shown for the example.

(a) From equation 1

$$R_f = \frac{50.33 \times 10^6}{f_o} = \frac{50.33 \times 10^6}{800}$$

$$\boxed{R_f = 62.9k}$$

(b) Checking Q_{MIN} from equation 3, arbitrarily let R_{IN} = 300k.

$$Q_{MIN} = \frac{1 + \frac{10^5}{R_{IN}}}{3.48} = \frac{1 + \frac{10^5}{3 \times 10^5}}{3.48} = 0.383$$

Since the Q required for the design (Q = 40), is greater than Q_{MIN}, the circuit of *Figure 4* or *Figure 6* may be used. Arbitrarily we shall select the circuit of *Figure 4*.

(c) From equation 4, R_Q is found to be

$$R_Q = \frac{10^5}{3.48Q - 1 - \frac{10^5}{R_{IN}}} = \frac{10^5}{(3.48)(40) - 1 - \frac{10^5}{3 \times 10^5}}$$

or $\boxed{R_Q = 725\Omega}$

(d) Calculate the center frequency gain for *Figure 4*.

$$A_B = \frac{-\left(1 + \frac{10^5}{R_Q} + \frac{10^5}{R_{IN}}\right)}{\left(1 + \frac{R_{IN}}{10^5} + \frac{R_{IN}}{R_Q}\right)} = \frac{-(1 + 137.9 + 0.333)}{(1 + 3.0 + 414)}$$

$$A_B = 0.333 \text{ V/V}$$

Since the gain at f_o is 0.333 V/V, a gain of 10 V/V can be obtained by using the uncommitted operational amplifier with a gain of 30.03 as shown in *Figure 8*.

Applications Information (Continued)

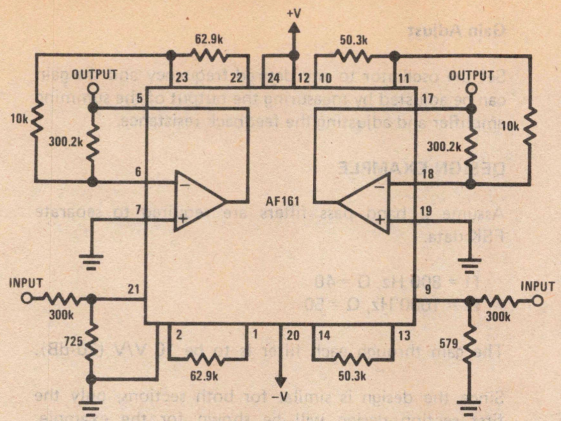

FIGURE 8. Dual Band Pass Filter

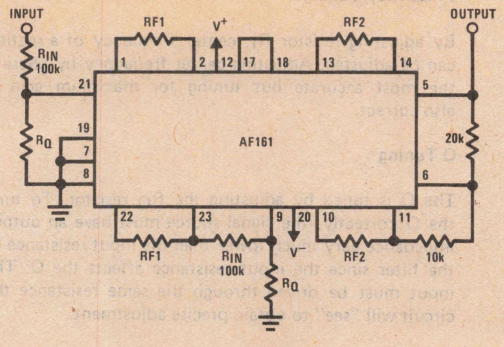

FIGURE 9. Telephone Multifrequency (MF) Band Pass Filter

FREQ	BW	f_c	f1	Q1 & Q2	f2	RF1	RF2	RQ
700	75	698.4	665.6	17	732.8	75.62k	68.68k	1.749k
900	75	898.7	865.8	21.8	932.9	58.13k	53.95k	1.354k
1100	75	1098.8	1065.7	26.7	1132.9	47.23k	44.43k	1.100k
1300	75	1298.9	1265.8	31.6	1332.9	39.76k	37.76k	926.2Ω
1500	75	1499.0	1465.8	36.4	1532.9	34.34k	32.83k	802.1Ω
1700	75	1699.1	1665.9	41.3	1733.0	30.21k	29.04k	705.6Ω

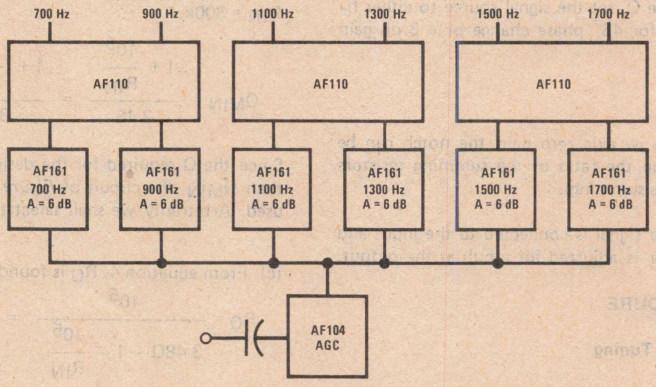

FIGURE 10. MF Tone Receiver

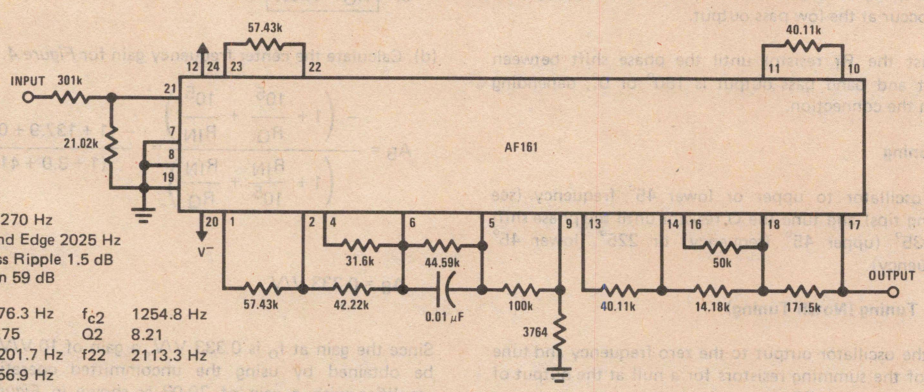

Cutoff 1270 Hz
Stop Band Edge 2025 Hz
Band Pass Ripple 1.5 dB
Rejection 59 dB

f_{c1}	876.3 Hz	f_{c2}	1254.8 Hz
Q1	1.75	Q2	8.21
f_{z1}	3201.7 Hz	f22	2113.3 Hz
f_R	356.9 Hz		

FIGURE 11. Low Pass Low Speed Asynchronous FSK Modem Filter

Applications Information (Continued)

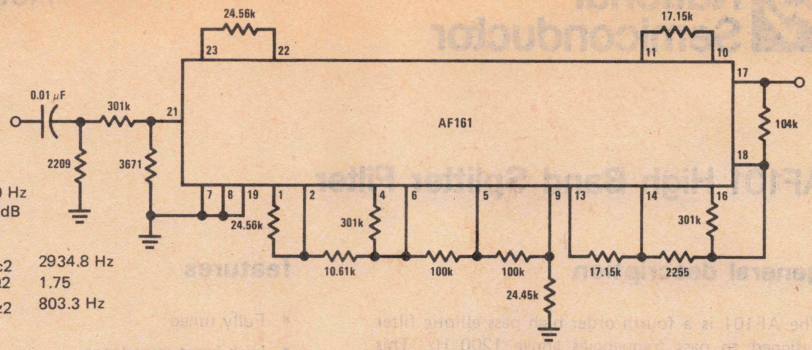

Cutoff 2025 Hz
Stop Band Edge 1270 Hz
Band Pass Ripple 1.5 dB
Rejection 59 dB

f_{c1}	2049.6 Hz	f_{c2}	2934.8 Hz
Q1	8.21	Q2	1.75
f_{z1}	1216.9 Hz	f_{z2}	803.3 Hz
f_R	7206 Hz		

FIGURE 12. High Pass Low Speed Asynchronous FSK Modem Filter

Standard Resistance Values are obtained from the Decade Table by multiplying by multiples of 10. As an example, 1.33 can represent 1.33Ω, 133Ω, 1.33 kΩ, 13.3 kΩ, 133 kΩ 1.33 MΩ.

Standard 5% and 2% Resistance Values

OHMS	OHMS	OHMS	OHMS	OHMS	OHMS	OHMS	OHMS	OHMS	OHMS	OHMS	MEGOHMS	
10	27	68	180	470	1,200	3,300	8,200	22,000	56,000	150,000	0.24	0.62
11	30	75	200	510	1,300	3,600	9,100	24,000	62,000	160,000	0.27	0.68
12	33	82	220	560	1,500	3,900	10,000	27,000	68,000	180,000	0.30	0.75
13	36	91	240	620	1,600	4,300	11,000	30,000	75,000	200,000	0.33	0.82
15	39	100	270	680	1,800	4,700	12,000	33,000	82,000	220,000	0.36	0.91
16	43	110	300	750	2,000	5,100	13,000	36,000	91,000		0.39	1.0
18	47	120	330	820	2,200	5,600	15,000	39,000	100,000		0.43	1.1
20	51	130	360	910	2,400	6,200	16,000	43,000	110,000		0.47	1.2
22	56	150	390	1,000	2,700	6,800	18,000	47,000	120,000		0.51	1.3
24	62	160	430	1,100	3,000	7,500	20,000	51,000	130,000		0.56	1.5

Decade Table Determining 1/2% and 1% Standard Resistance Values

1.00	1.21	1.47	1.78	2.15	2.61	3.16	3.83	4.64	5.62	6.81	8.25
1.02	1.24	1.50	1.82	2.21	2.67	3.24	3.92	4.75	5.76	6.98	8.45
1.05	1.27	1.54	1.87	2.26	2.74	3.32	4.02	4.87	5.90	7.15	8.66
1.07	1.30	1.58	1.91	2.32	2.80	3.40	4.12	4.99	6.04	7.32	8.87
1.10	1.33	1.62	1.96	2.37	2.87	3.48	4.22	5.11	6.19	7.50	9.09
1.13	1.37	1.65	2.00	2.43	2.94	3.57	4.32	5.23	6.34	7.68	9.31
1.15	1.40	1.69	2.05	2.49	3.01	3.65	4.42	5.36	6.49	7.87	9.53
1.18	1.43	1.74	2.10	2.55	3.09	3.74	4.53	5.49	6.65	8.06	9.76

National Semiconductor

AF101 High Band Splitter Filter

general description

The AF101 is a fourth order high pass elliptic filter designed to pass frequencies above 1200 Hz. This filter is used to separate the high band of frequencies from the low band in a Dual Tone Multi Frequency (DTMF) Touch Tone® receiver. The unit is fully tuned and requires no external components — only power supply, input, and output connections.

features

- Fully tuned
- High input impedance
- Low output impedance
- Wide power supply range ±5V to ±18V

connection diagram

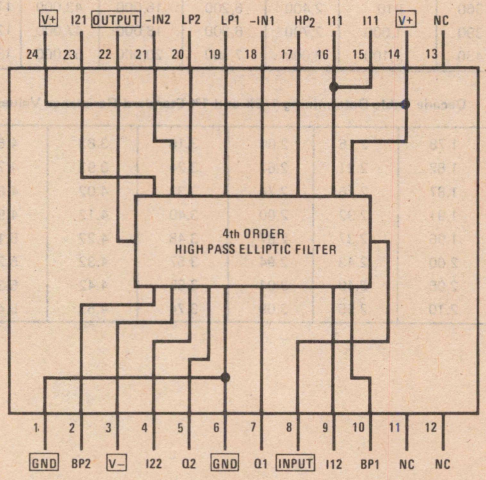

Ceramic Dual-In-Line Package HY24A
AF101CJ

Note: Only those pin functions marked with a □ need be connected for normal operation. All other pins are internal connections or test points; DO NOT USE.

® Registered service mark of AT&T Company.

absolute maximum ratings

Supply Voltage	±18V
Power Dissipation	1W
Input Voltage	±36V
Output Short Circuit Duration	Infinite
Lead Temperature (soldering, 10 sec.)	300°C
Operating Temperature Range	0°C to +70°C
Storage Temperature Range	−25°C to +100°C

electrical characteristics

V_S = ±12V to ±15V, T_A = 0°C to 70°C, unless otherwise specified.

PARAMETER	SYMBOL	CONDITIONS	MIN	TYP	MAX	UNITS
Cutoff Frequency	f_c			1190	1209	Hz
Passband Ripple	A_{MAX}	1190 to 1660 Hz	−0.5	0	0.5	dB
Stopband Edge	f_s		941	955		Hz
Stopband Attenuation	A_{MIN}		25	28		dB
Gain	A_O	at 1336 Hz	−0.5	0	+0.5	dB
Group Delay	gd				2	ms
Input Impedance	Z_{IN}		30k	32k		Ω
Output Impedance	Z_O			<1	5	Ω
Operating Supply Voltage	V_S		±5		±18	V
Power Supply Current	I_S	V_S = ±15V		5	9	mA

typical performance characteristics

Typical Amplitude Response

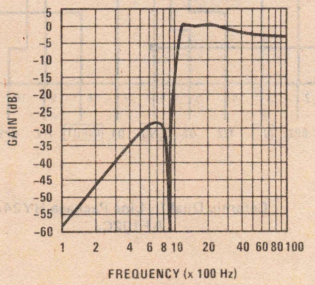

National Semiconductor

AF102 Dial Tone Reject Filter

general description

The AF102 is a fourth order elliptic highpass filter designed to reject frequencies below 650Hz. This filter rejects the 350Hz and 440Hz dial tone frequencies present on a telephone line. The unit is fully tuned and requires no external components — only input, output and power supply connections.

features

- Fully tuned
- High input impedance
- Low output impedance
- Wide power supply range ±5V to ±18V

connection diagram

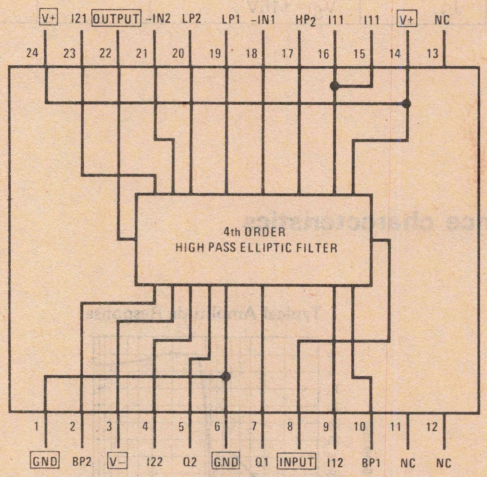

Ceramic Dual-In-Line Package HY24A
AF102CJ

Note: Only those pin functions marked with a □ need be connected for normal operation. All other pins are internal connections or test points; DO NOT USE.

absolute maximum ratings

Supply Voltage	±18V
Power Dissipation	1W
Input Voltage	±36V
Output Short Circuit Duration	Infinite
Lead Temperature (soldering, 10 sec.)	300°C
Operating Temperature Range	0°C to +70°C
Storage Temperature Range	-25°C to +100°C

electrical characteristics

V_S = ±12V to ±15V, T_A = 0°C to 70°C, unless otherwise specified.

PARAMETER	SYMBOL	CONDITIONS	MIN	TYP	MAX	UNITS
Cutoff Frequency	f_c			685	697	Hz
Passband Ripple	A_{MAX}	f = 685 Hz to 1660 Hz	−0.5	0	0.5	dB
Stopband Frequency	f_s		440	450		Hz
Stopband Attenuation	A_{MIN}	f < 440 Hz	34	35		dB
Gain	A_O	at 941 Hz	−0.5	0	0.5	dB
Group Delay	gd				2	ms
Input Impedance	Z_{IN}		29k	30k		Ω
Output Impedance	Z_O			< 1	5	Ω
Power Supply Voltage	V_S		±5		±18	V
Power Supply Current	I_S	V_S = ±15V		5	9	mA

typical performance characteristics

Typical Amplitude Response

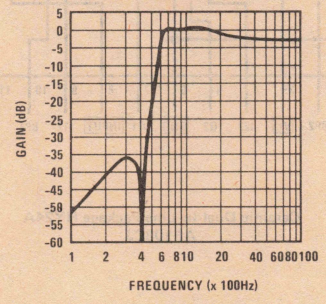

National Semiconductor

AF103 Low Band Splitter

general description

The AF103 is a fourth order elliptic low pass filter designed to reject frequencies above 1200 Hz and pass signals below 950 Hz. This filter is used to separate the low band of frequencies from the high band in a Dual Tone Multi Frequency (DTMF) Touch Tone® receiver. The unit is fully tuned and requires no external components — only power supply, input and output connections.

features

- Fully tuned
- High input impedance
- Low output impedance
- Wide power supply range ±5V to ±18V

connection diagram

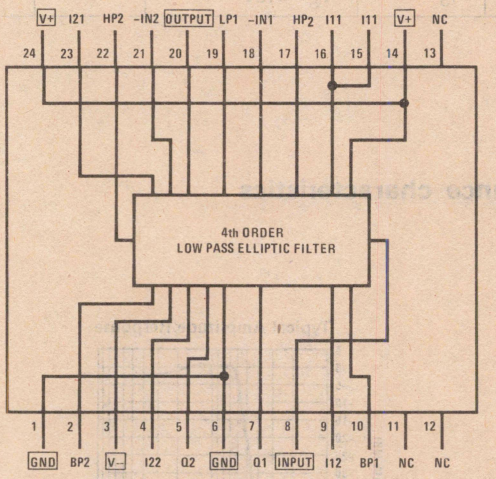

Ceramic Dual-In-Line Package HY24A
AF103CJ

Note: Only those pin functions marked with a □ need be connected for normal operation. All other pins are internal connections or test points; DO NOT USE.

® Registered service mark of AT&T Company.

absolute maximum ratings

Supply Voltage	±18V
Power Dissipation	1W
Input Voltage	±36V
Output Short Circuit Duration	Infinite
Lead Temperature (soldering, 10 sec.)	300°C
Operating Temperature Range	0°C to +70°C
Storage Temperature Range	-25°C to +100°C

electrical characteristics

V_S = ±12V to ±15V, T_A = 0°C to 70°C, unless otherwise specified.

PARAMETER	SYMBOL	CONDITIONS	MIN	TYP	MAX	UNITS
Cutoff Frequency	f_c		941	955		Hz
Passband Ripple	A_{MAX}	f = 686 Hz to 955 Hz	−0.5	0	0.5	dB
Stopband Frequency	f_s			1190	1209	Hz
Stopband Attenuation	A_{MIN}	f > 1200 Hz	25	28		dB
Gain	A_O	at 852 Hz	−0.5	0	0.5	dB
Group Delay	gd				2	ms
Input Impedance	Z_{IN}		30k	33k		Ω
Output Impedance	Z_O			< 1	5	Ω
Operating Supply Voltage	V_S		±5		±18	V
Power Supply Current	I_S	V_S = ±15V		5	9	mA

typical performance characteristics

Typical Amplitude Response

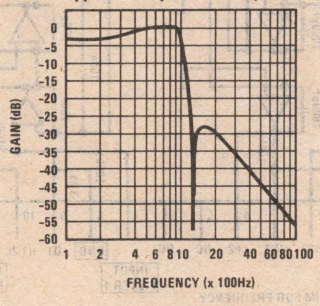

National Semiconductor

AF111, AF112, AF113, AF114 Dual Filters

general description

The AF111 through AF114 are dual bandpass filters tuned to the DTMF (Touch Tone®) frequencies. Each filter is a second order bi-quad section. The filters have a gain of one at the center frequency and a Q of 15.

features

- No external adjustments
- fc ± 0.5%
- Q = 15 ± 1
- Gain 0 ± 0.25 dB
- High input impedance > 100k
- Low output impedance < 1 ohm

	Filter 1	Filter 2
AF111	697 Hz (L1)	770 Hz (L2)
AF112	852 Hz (L3)	941 Hz (L4)
AF113	1209 Hz (H1)	1336 Hz (H2)
AF114	1477 Hz (H3)	1633 Hz (H4)

connection diagram and equivalent circuit

Ceramic
Dual-In-Line
Package HY24A
AF111CJ
AF112CJ
AF113CJ
AF114CJ

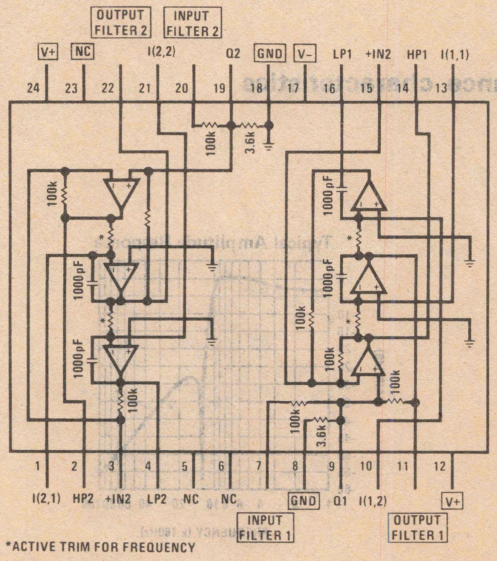

*ACTIVE TRIM FOR FREQUENCY

Note: Only those pin functions marked with a □ need be connected for normal operation. All other pins are internal connections or test points; DO NOT USE.

® Registered service mark of AT&T Company.

absolute maximum ratings

Supply Voltage	±18V
Power Dissipation	1W
Differential Input Voltage	±36V
Output Short Circuit Duration (Note 1)	Infinite
Lead Temperature (soldering, 10 sec.)	300°C
Operating Temperature	0°C to +70°C
Storage Temperature	−25°C to +100°C

electrical characteristics

V_S = ±12V to ±15V, T_A = 25°C, unless otherwise specified.

PARAMETER	SYMBOL	CONDITIONS	MIN	TYP	MAX	UNITS
Frequency	f_o					
AF111CJ		Filter 1		697		Hz
		Filter 2		770		Hz
AF112CJ		Filter 1		852		Hz
		Filter 2		941		Hz
AF113CJ		Filter 1		1209		Hz
		Filter 2		1336		Hz
AF114CJ		Filter 1		1477		Hz
		Filter 2		1633		Hz
f_o Accuracy		T_A = 25°C	−0.5%		+0.5%	%
f_o Temperature Coefficient	$\Delta f_o/\Delta T$	0°C ≤ T_A ≤ 70°C		±50		ppm/°C
Q	Q		14.5	15	15.5	Hz/Hz
Q Temperature Coefficient	$\Delta Q/\Delta T$	0°C ≤ T_A ≤ 70°C		±300	±750	ppm/°C
Power Supply Current	I_S			5	9	mA
Gain	A_V		−0.25	0	+0.25	dB
Gain Temperature Coefficient	$\Delta A_V/\Delta T$	0°C ≤ T_A ≤ 70°C		±300		ppm/°C
Group Delay	gd				10	ms
Output Impedance	Z_O			< 1	5	Ω
Input Impedance	Z_{IN}		90k	100k		Ω

Note 1: Any output can be shorted to ground indefinitely; however, more than one should not be simultaneously shorted, as the maximum junction temperature will be exceeded.

National Semiconductor

AF121, AF122 DTMF Bandpass Filters

General Description

The AF121 and AF122 are 6th order elliptic bandpass filters designed for use with digital DTMF detectors. These filters are compatible with tone detector circuits such as the Rockwell CRC8030 and the Mostek MK5102 DTMF digital receivers. The filters provide 40 dB separation between the high and low frequency signaling groups and the dial tone frequencies. The bandpass feature eliminates the need for a separate dial tone reject filter.

Features

- Compatible with Rockwell CRC8030 and Mostek MK5102
- Gain — 0 ±0.5 dB
- Ripple — 2 dB peak to peak
- Input Impedance — 175 kΩ min
- Power Supply — ±5V to ±18V

Connection Diagram

Dual-In-Line Package

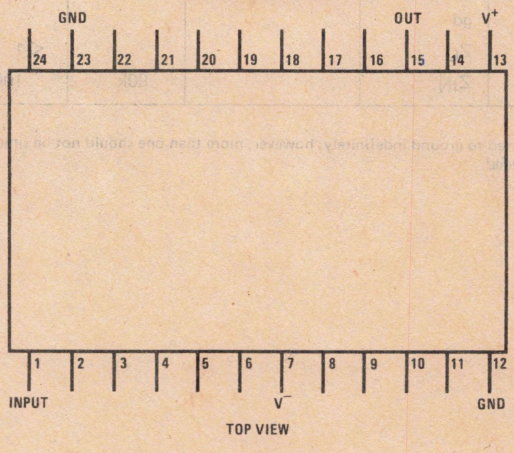

Unspecified pins are for internal use only and should not be used for external connection.

Order Number
AF121-1CJ, AF121-2CJ
AF122-1CJ, AF122-2CJ

Absolute Maximum Ratings

Supply Voltage	±18V
Power Dissipation	1W
Input Voltage	±100V
Output Short Circuit Duration	Infinite
Operating Temperature Range	0°C to 70°C
Storage Temperature Range	−25°C to +100°C
Lead Temperature (Soldering, 10 seconds)	300°C

Electrical Characteristics $V_S = \pm12V$ to $\pm15V$, $T_A = 0°C$ to $70°C$ unless otherwise specified.

SYMBOL	PARAMETER	CONDITIONS	AF121-2CJ			AF121-1CJ			UNITS
			MIN	TYP	MAX	MIN	TYP	MAX	
A_O	Gain	f = 800 Hz	−0.5	0	0.5	−1.5	0	1.5	dB
A_{MAX}	Ripple (Pk to Pk)	697 Hz ≤ f ≤ 950 Hz		1.5	2			5	dB
A_{MIN}	Rejection	f ≤ 500 Hz, f ≥ 1200 Hz	−40			−38			dB
Z_{IN}	Input Impedance		175			175			kΩ
Z_{OUT}	Output Impedance			1			1		Ω
V_{OS}	DC Offset			30	80		30	130	mV
P_D	Power Dissipation	$T_A = 25°C$, $V_S = \pm15V$		165			165		mW
					270			270	mW
V_{CC}	Power Supply	$V_{CC} = (V^+) - (V^-)$	10		36	10		36	V_{DC}

SYMBOL	PARAMETER	CONDITIONS	AF122-2CJ			AF122-1CJ			UNITS
			MIN	TYP	MAX	MIN	TYP	MAX	
A_O	Gain	f = 1405 Hz	−0.5	0	0.5	−1.5	0	1.5	dB
A_{MAX}	Ripple (Pk to Pk)	1209 Hz ≤ f ≤ 1633 Hz		1.2	2			4	dB
A_{MIN}	Rejection	f ≥ 2200 Hz, f ≤ 950 Hz	−40			−38			dB
Z_{IN}	Input Impedance		175			175			kΩ
Z_{OUT}	Output Impedance			1			1		Ω
V_{OS}	DC Offset			20	70		20	120	mV
P_D	Power Dissipation	$T_A = 25°C$, $V_S = \pm15V$		165			165		mW
					270			270	mW
V_{CC}	Power Supply	$V_{CC} = (V^+) - (V^-)$	10		36	10		36	V_{DC}

Typical Performance Characteristics

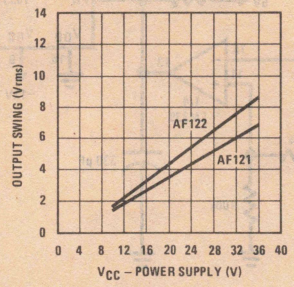

FIGURE 1. Output Swing vs Power Supply Voltage

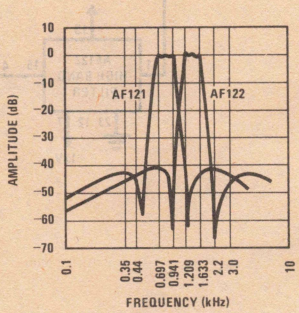

FIGURE 2. Typical Amplitude Response

Applications Information

The DTMF receivers used to detect signals from push-button telephones require at least 2 filters. In recent years single chip integrated circuits have been designed to detect the signaling tones and perform the logic functions required in DTMF receivers. These receivers still require input band splitting filters to separate the 2 input tones. Two such detectors are the Rockwell CRC8030 and the Mostek MK5102. The National Semiconductor AF121-2CJ and AF122-2CJ are bandpass filters which provide 40 dB separation between the bands. The AF121 and AF122 filters are 6th order elliptic bandpass filters. The AF121-2CJ and AF122-2CJ have 0 dB ± 0.5 dB gain at the center of the pass band with a maximum ripple of 2 dB peak to peak. The stop band rejection is greater than 40 dB. *Figure 2* shows the typical amplitude response of the 2 filters.

Figure 3 is the block diagram of a tone receiver system using the AF121 and AF122 to split the input signal into low group and high group signals. The signals are next passed through AGC circuits which provide amplitude correction to equalize the signal level in the 2 channels and to provide a known level to the limiters. The limiters have a threshold setting circuit such that signals which exceed the threshold will appear at the inputs of the digital tone detector.

The input bandpass filters reject the dial tone signals, when present, and provide enough rejection to noise and extraneous signals to assure a low error rate system. The AGC amplifiers equalize the tone levels in each band. This allows the detection of signals with large twists. The AGC amplifiers also provide up to 24 dB gain to the tone signal, allowing operation over a wide range of input levels.

The National Semiconductor AF104 AGC amplifier is a linear fixed gain device with an input attenuator controlled by the average output amplitude. Additional circuitry provides fast recovery when a burst of signal is applied to the input. The typical recovery time of the circuit is one half cycle of the input frequency.

The limiters can be built of discrete components using a comparator such as the National Semiconductor LM339. The limiter threshold can be set by using the internal reference of the AF104, which is a +5V regulator. This provides a stable threshold independent of the system power supply. Since none of the analog circuits are dependent on the power supply for a reference and all the circuits have good common-mode rejection, a simple power supply is all that is required as long as the supply voltages remain greater than ±9V.

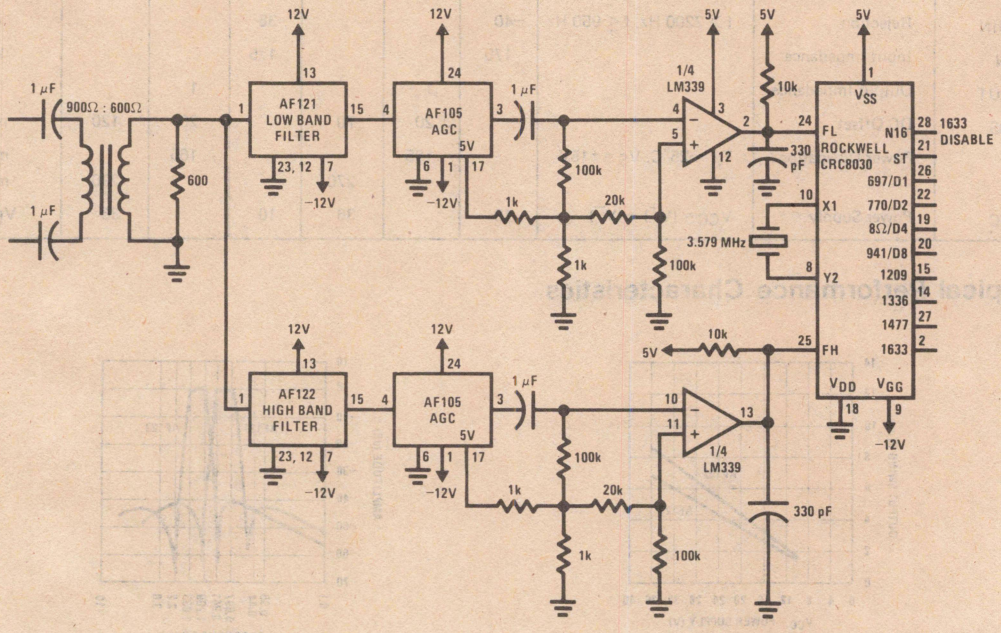

FIGURE 3. Tone Receiver Block Diagram Using Rockwell CRC8030

Applications Information (Continued)

Figure 4 shows a complete circuit for interfacing to Mostek's MK5102. The limiters are formed using a single LM2901 and provide hysteresis to prevent oscillations at the input of the decoder.

The AF121-1CJ and AF122-1CJ are DTMF band splitter filters for applications with less stringent electrical requirements.

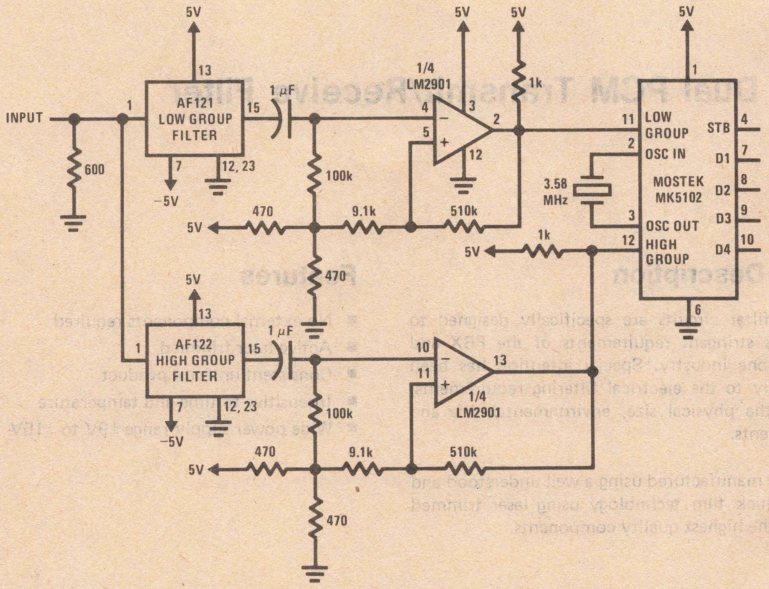

FIGURE 4. Tone Receiver Circuit Using Mostek MK5102

National Semiconductor

AF132 Dual PCM Transmit/Receive Filter

General Description

The AF132 filter circuits are specifically designed to meet the less stringent requirements of the PBX and PABX telephone industry. Special attention has been given not only to the electrical filtering requirements, but also to the physical size, environmental, life and cost requirements.

The filters are manufactured using a well understood and dependable thick film technology using laser trimmed resistors and the highest quality components.

Features

- No external components required
- Active laser trimmed
- Consistent uniform product
- Insensitive to time and temperature
- Wide power supply range ±9V to ±15V

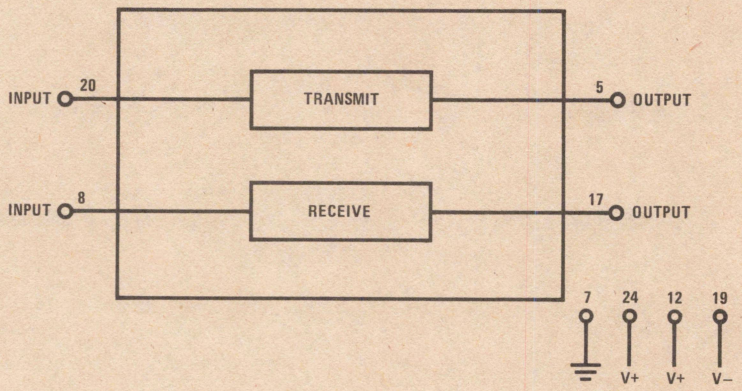

Ceramic Dual-In-Line
Package HY24A
AF132CJ

Absolute Maximum Ratings

Supply Voltage	±18V
Power Dissipation	1W/Package
Input Voltage	±18V
Output Short-Circuit Duration	Continuous
Operating Temperature Range	0°C to +70°C
Storage Temperature Range	−25°C to +100°C
Lead Temperature (Soldering, 10 seconds)	300°C

Electrical Characteristics

Unless otherwise noted, these specifications apply over the temperature range from 0°C to +70°C and are tested using ±12V power supplies, but are guaranteed for any symmetrical power supply operating between ±9V to ±15V.

PARAMETER		CONDITIONS	TRANSMIT			RECEIVE			UNITS
			MIN	TYP	MAX	MIN	TYP	MAX	
A_O	Voltage Gain	f = 800 Hz	−0.5	0	0.5	−0.5	0.14	0.5	dB
ΔA	Ripple	300 Hz ≤ f ≤ 3000 Hz, (Note 1)		±0.35	±0.5		±0.35	±0.5	dB
A	Gain (Stop Band)	f > 5.3 kHz				−20			dB
A	Gain (Stop Band)	f > 4.6 kHz	−20						dB
e_O	Output Voltage Swing	V_{CC} ±12 V, R_L = 2k		20		20			Vp-p
V_{OS}	Output DC Offset		−100		100	−100		100	mV
Z_{IN}	Input Impedance	DC to 10 kHz, T_A = 25°C	90k	100k		90k	100k		Ω
Z_O	Output Impedance	DC to 10 kHz, T_A = 25°C		0.5	1		0.5	1	Ω
PSRR	Power Supply Rejection	120 Hz to 3.4 kHz		97			97		dB
		3.4 kHz to 25 kHz		90			90		dB
P_D	Power Dissipation	V_{CC} = ±12V		135	220				mW
		V_{CC} = ±15V		190	270				mW

Note 1: For the receive section, ripple is specified as the deviation from the ideal pass band response that would result if the $\left[\frac{\sin \frac{\pi f}{8000}}{\frac{\pi f}{8000}}\right]$ roll-off characteristics were compensated perfectly, and assumes the inclusion of a sample and hold.

Applications Information

GENERAL

The transmit and receive filters are both third order elliptic low pass filters that have been specifically designed for 8 kHz sampled data systems found in telephone PCM communication systems and some military systems, *(Figure 1)*.

The transmit filter is designed to provide a flat band pass response from DC to 3.0 kHz and attenuate signals above 4.5 kHz to prevent these signals from occuring in the sampled data.

The receive filter is designed to receive the sampled data in order to reconstruct the original analog signal. Because the information has been processed through a sample and hold technique, the amplitude information in the band pass has a characteristic SIN X/X response. The purpose of the receive filter is to provide the necessary response to compensate for the input signal frequency response and restore the amplitude information to a flat band pass characteristic.

The block diagram in *Figure 2*, indicates the basic construction of the AF132.

All other pins not shown connected should be left open.

PROVIDING LOW FREQUENCY ROLL-OFF

In most systems, it is necessary to have a low frequency high pass filter in front of the transmit filter to attenuate 60 Hz and 120 Hz. Some attenuation can be achieved by capacitively coupling the input signal, with the proper value of capacitor, C, selected to trade off 60 Hz attenuation with the amount of band pass

Applications Information (Continued)

flatness near 300 Hz. The capacitor is easily selected since the input impedance (resistive only) is specified. A second, and more desirable solution, is shown in *Figure 4*. This filter makes use of the AF100 as a second order high pass filter. It provides 22 dB of attenuation of 60 Hz, and has less than 0.03 dB effect on the band pass characteristics at 300 Hz.

TESTING

The circuit in *Figure 5* is typical of that used by National Semiconductor to test the active filters. In testing and in actual application, the filter must be driven from a low impedance source ($R_S \leq 50\Omega$).

CODEC

National Semiconductor presently manufactures two monolithic circuits designed to perform the entire companding coder/decoder function. Before proceeding with your design, please contact National for information about these devices, the MM58100 and the LF2700.

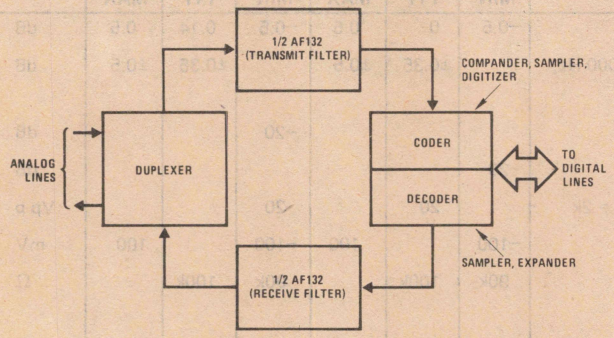

FIGURE 1. PCM Block Diagram

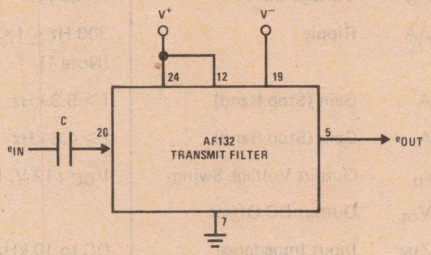

FIGURE 2. Capacitive Coupling to Provide Low Frequency Roll-Off

AF132 TRANSMIT FILTER SECTION

The transmit section is a third order elliptic low pass filter designed to provide a flat amplitude response from 300 Hz to 3.0 kHz, and 20 dB or more attenuation of signals above 4.5 kHz.

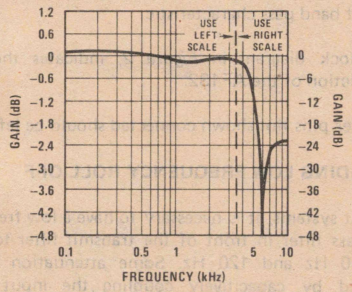

Transmit Filter

AF132 RECEIVE FILTER SECTION

The receive section is a third order elliptic low pass filter designed to receive PCM information. Because this information has been transmitted in a sampled data PCM system, the amplitude information has been degraded by the inherent SIN X/X sampling function. The receive filter approximates the required function that is necessary to compensate the frequency response and restore a flat band pass response.

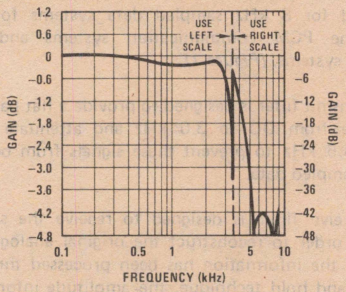

Receive Filter

Applications Information (Continued)

FREQUENCY	ATTENUATION
60 Hz	−22 dB
120 Hz	−6 dB
180 Hz	−1.5 dB
300 Hz	−0.03 dB

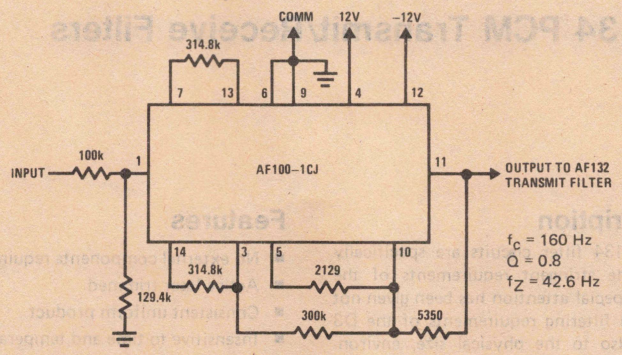

FIGURE 3. Providing 60 Hz Attenuation

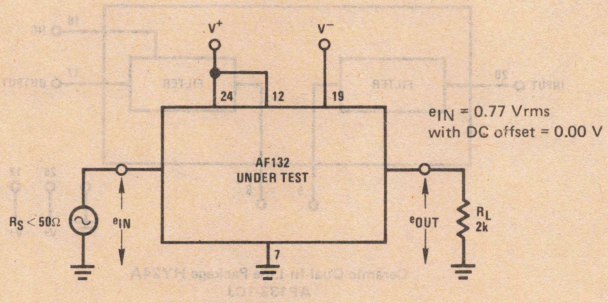

FIGURE 4. Test Circuit

National Semiconductor

AF133/AF134 PCM Transmit/Receive Filters

General Description

The AF133 and AF134 filter circuits are specifically designed to meet the stringent requirements of the telephone industry. Special attention has been given not only to the electrical filtering requirements of the D3 channel bank, but also to the physical size, environmental, life and cost requirements.

The filters are manufactured using a well understood and dependable thick film technology using laser trimmed resistors and the highest quality components.

Features

- No external components required
- Active laser trimmed
- Consistent uniform product
- Insensitive to time and temperature
- Designed for D3 system requirements
- Wide power supply range ±12V to ±15V

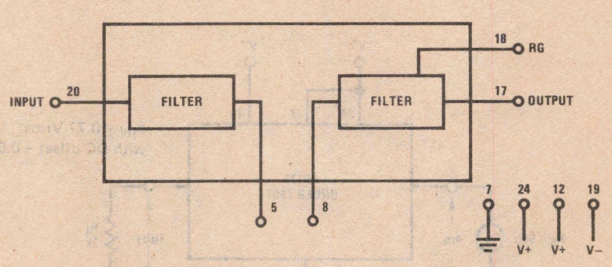

Ceramic Dual-In-Line Package HY24A
AF133-1CJ
AF133-2CJ

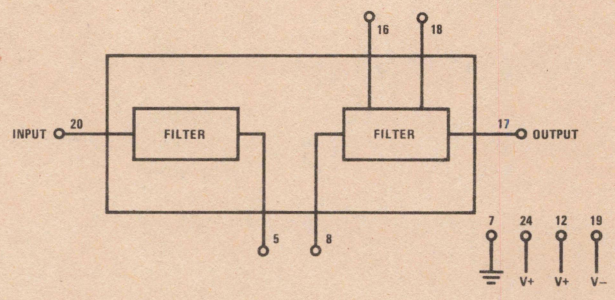

Ceramic Dual-In-Line Package HY24A
AF134-1CJ
AF134-2CJ

Absolute Maximum Ratings

Supply Voltage	±18V
Power Dissipation	1W/Package
Input Voltage	±18V
Output Short-Circuit Duration	Continuous
Operating Temperature Range	0°C to +70°C
Storage Temperature Range	−25°C to +100°C

Electrical Characteristics

Unless otherwise noted, these specifications apply over the temperature range from 0°C to +70°C and are tested using ±12V supplies, but are guaranteed for any symmetrical supply operation between ±12V to ±15V.

AF133 Transmit Filter

SYMBOL	PARAMETER	CONDITIONS	AF133-1			AF133-2			UNITS
			MIN	TYP	MAX	MIN	TYP	MAX	
FREQUENCY RESPONSE									
	Voltage Gain	(Note 2)							
A		f = 3.4 kHz	−1.5	−0.6	0	−0.9	−0.6	0	dB
A		f = 4 kHz		−16	−14		−16	−15	dB
A		f ≥ 4.5 kHz		−33	−30		−33	−32	dB
ΔA	Pass Band Ripple	300 Hz ≤ f ≤ 3 kHz		±0.08	±0.3		±0.08	±0.125	dB
Δt	Differential Delay	1 kHz ≤ f ≤ 2.6 kHz		60	90		60	80	μs
$\Delta A_o/\Delta T$	Gain Stability with Temperature	f = kHz, e_{IN} = 0.1 Vrms		0.0015			0.0015		dB/°C
$\Delta A_o/\Delta t$	Gain Stability with Time	f = 1 kHz, e_{IN} = 0.1 Vrms		0.0005			0.0005		dB/Yr
THD	Distortion	f = 1 kHz, e_{IN} = 0.1 Vrms		0.1	0.5		0.1	0.5	%
e_n	Output Noise Voltage	10 Hz to 50 kHz, e_{IN} = 0V, T_A = 25°C		150	250		150	250	μVp-p
e_o	Output Voltage Swing	V_{CC} = ±12V, R_L = 2k, A = A_o, (Note 2)	10	15		10	15		Vp-p
V_{os}	Output DC Offset		−100		100	−25		25	mV
Z_{IN}	Input Impedance	DC to 10 kHz, T_A = 25°C	100k			100k			Ω
Z_o	Output Impedance	DC to 10 kHz, T_A = 25°C		0.5	1		0.5	1	Ω
PSRR	Power Supply Rejection	120 Hz to 3.4 kHz		97		97			dB
		3.4 kHz to 25 kHz		90		90			dB
P_D	Power Dissipation	V_{CC} = ±12V		135	220		135	220	mW
		V_{CC} = ±15V		190	270		190	270	mW

Note 1: The voltage gain may be adjusted. Refer to application discussion.
Note 2: The AF133 requires an external gain resistor, (R = 133k typ). All gain measurements assume gain at DC set for 0 dB at 1 kHz.

Electrical Characteristics

AF134 Receive Filter

SYMBOL	PARAMETER	CONDITIONS	AF134-1			AF134-2			UNITS
			MIN	TYP	MAX	MIN	TYP	MAX	
FREQUENCY RESPONSE									
	Voltage Gain	(Notes 1 and 2)							
		f = 1 kHz	−0.08	0.22	0.52	0.095	0.22	0.345	dB
A_o		f = 3.4 kHz	−1.2	−0.6	0	−0.9	−0.6	0	dB
A		f = 4 kHz		−12	−10		−12	−11	dB
A		f > 4.5 kHz		−25	−24		−26	−25	dB
A		f = 8 kHz		−31	−30		−31	−30	dB
ΔA	Pass Band Ripple	300 Hz ≤ f ≤ 3 kHz, (Note 2)	−0.3		0.3	−0.125	0	0.125	dB
Δt	Differential Delay	1 kHz ≤ f ≤ 2.6 kHz		80	90		80	90	μs
$\Delta A_o/\Delta T$	Gain Stability with Temperature	f = 1 kHz, e_{IN} = 0.1 Vrms		0.0015			0.0015		dB/°C
$\Delta A_o/\Delta t$	Gain Stability with Time	f = 1 kHz, e_{IN} = 0.1 Vrms		0.0005			0.0005		dB/Yr
THD	Distortion	f = 1 kHz, e_{IN} = 0.1 Vrms		0.1	0.5		0.1	0.5	%
e_n	Output Noise Voltage	10 Hz to 50 kHz, e_{IN} = 0V, T_A = 25°C		150	250		150	250	μVp p
e_o	Output Voltage Swing	V_{CC} = ±12V, R_L = 2k	10	15		10	15		Vp-p
V_{os}	Output DC Offset	V_{IN} = 0V, T_A = 25°C	−100		100	−25		25	mV
Z_{IN}	Input Impedance	DC to 10 kHz, T_A = 25°C	100k			100k			Ω
Z_o	Output Impedance	DC to 10 kHz, T_A = 25°C		0.5	1		0.5	1	Ω
PSRR	Power Supply Rejection	120 Hz to 3.4 kHz		97		97			dB
		3.4 kHz to 25 kHz		90		90			dB
P_D	Power Dissipation	V_{CC} = ±12V		135	220		135	220	mW
		V_{CC} = ±15V		190	270		190	270	mW

Note 1: The voltage gain may be adjusted. Refer to application discussion.

Note 2: For the AF134, the pass band ripple specifications do not refer to the AF134 itself. This specification is the deviation from the ideal band pass response that would result if the $\left[\frac{\sin \frac{\pi f}{8000}}{\frac{\pi f}{8000}}\right]$ roll-off characteristic were compensated perfectly, and assumes the inclusion of an ideal sample and hold.

Applications Information

GENERAL

The AF133 and AF134 are both fifth order elliptic low pass filters that have been specifically designed for 8 kHz sampled data systems found in telephone PCM communication systems and some military systems, *(Figure 1)*.

The AF133 transmit filter is designed to (a) provide a very flat band pass response from DC to 3.2 kHz, (b) attenuate signals at 4 kHz (1/2 the sampling rate) by at least 16 dB to prevent "aliasing" or "frequency folding" in the sampled data, and (c) attenuate signals above

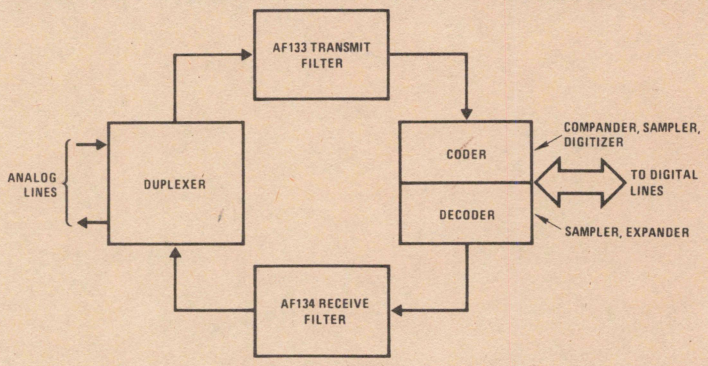

FIGURE 1. PCM Block Diagram

Applications Information (Continued)

4.5 kHz to prevent these signals from occuring in the sampled data.

The AF134 receive filter is designed to receive the sampled data in order to reconstruct the original analog signal. Because the information has been processed through a sample and hold technique, the amplitude information in the band pass has a characteristic (SIN X)/X response. The purpose of the AF134 filter is to provide the necessary response to compensate for the input signal frequency response and restore the amplitude information to a flat pass band characteristic.

GAIN ADJUST

The block diagram in *Figure 2* indicates the basic connection of the AF133.

It consists of 2 separate sections which are connected together externally by the user by jumpering pin 5 to pin 8.

Because it is desirable to have the ability to adjust the voltage gain of the filter, provision has been made to do so *by omitting the gain setting resistor in the feedback path of the output operational amplifier*. For this reason, an external resistor *must* be added between pins 17 and 18 to render the filter operative. The nominal value of the resistor required is 133 kΩ for a 0 dB voltage gain.

All other pins not shown connected should be left open.

Likewise, provision has been made for the user to adjust the gain of the AF134 receive filter as shown in *Figure 3*.

Although R1 and/or R2 are not required for normal operation, it can be easily seen that the addition of R1 (across the internal 100k resistor) will increase the gain, whereas the addition of R2 (across the internal feedback resistor) will decrease the gain.

Obviously, R1 and R2 can be replaced by a single pot with the wiper arm tied to pin 18.

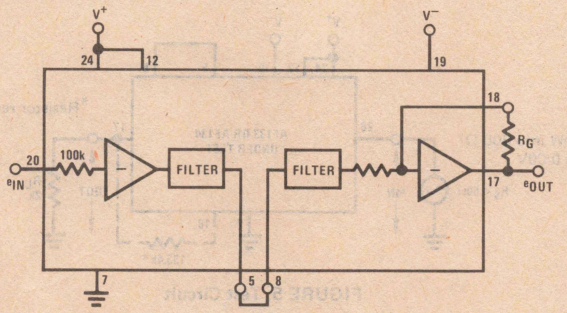

R_G = 133 kΩ for 0 dB gain (nominal)

FIGURE 2. Functional Diagram of AF133

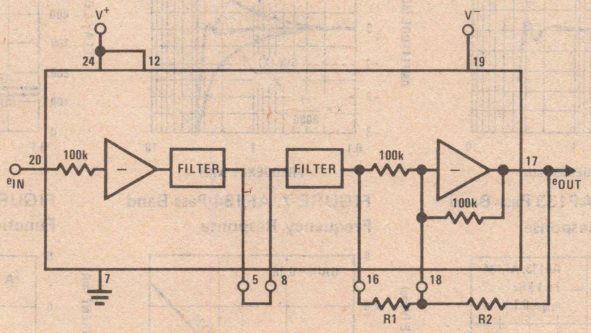

FIGURE 3. AF134 Gain Adjust

PROVIDING LOW FREQUENCY ROLL-OFF

In some systems, it is necessary to have a low frequency high pass filter in front of the transmit filter to attenuate 60 Hz and 120 Hz. Some attenuation can be achieved by capacitively coupling the input signal, with the proper value of capacitor, C, selected to trade off 60 Hz attenuation with the amount of band pass flatness near 300 Hz. The capacitor is easily selected since the input impedance (resistive only) is specified. A second, and more desirable solution, is shown in *Figure 4*. This filter makes use of the AF100 as a second order high pass filter. It provides 22 dB of attenuation of 60 Hz, and has less than 0.03 dB effect on the band pass characteristics at 300 Hz.

Applications Information (Continued)

FREQUENCY	ATTENUATION
60 Hz	−22 dB
120 Hz	−6 dB
180 Hz	−1.5 dB
300 Hz	−0.03 dB

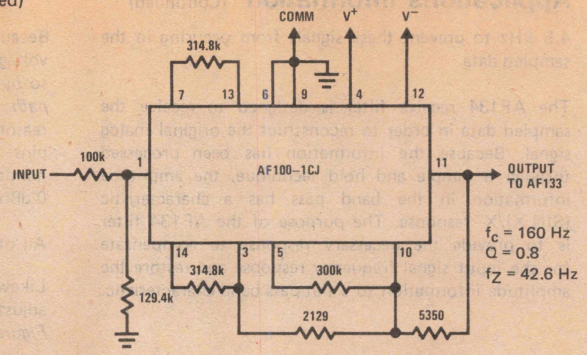

FIGURE 4. Providing 60 Hz Attenuation

TESTING

The circuit shown below is typical of that used by National Semiconductor to test the active filters. In testing and in actual application, the filter must be driven from a low impedance source ($R_S \leq 50\Omega$).

CODEC

National Semiconductor presently manufactures 2 monolithic circuits designed to perform the entire companding coder/decoder function. Before proceeding with your design, please contact National for information about these devices, the MM58100 and the LF2700.

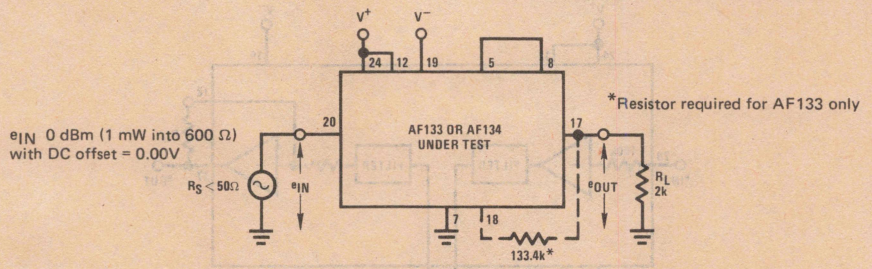

FIGURE 5. Test Circuit

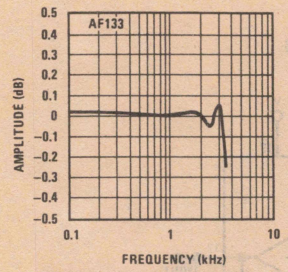

FIGURE 6. AF133 Pass Band Frequency Response

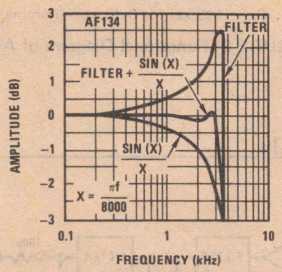

FIGURE 7. AF134 Pass Band Frequency Response

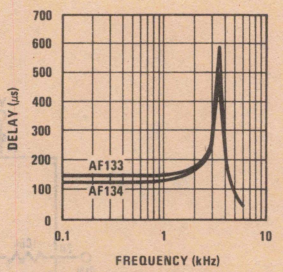

FIGURE 8. Group Delay as a Function of Frequency

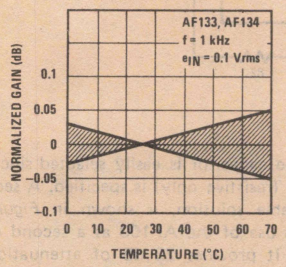

FIGURE 9. Normalized Gain Variation with Temperature

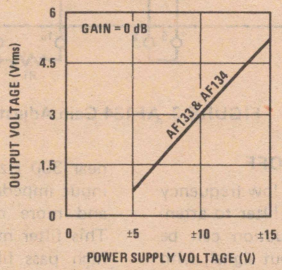

FIGURE 10. Output Voltage Swing vs Power Supply Voltage

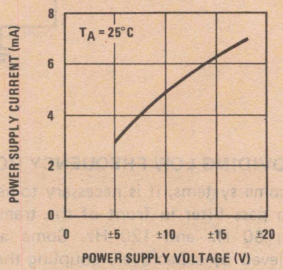

FIGURE 11. Power Supply Current vs Power Supply Voltage

AF133 TRANSMIT FILTER

The AF133 is a fifth order elliptic low pass filter designed to provide a flat amplitude response from 300 Hz to 3.2 kHz, 16 dB attenuation at 4 kHz (one-half the PCM sampling frequency) and 33 dB or more attenuation of signals above 4.5 kHz. The gain of the filter is set by one external resistor.

AF134 RECEIVE FILTER

The AF134 is a fifth order elliptic low pass filter designed to receive PCM information from the D3 channel bank. Because this information has been transmitted in a sampled data PCM system, the amplitude information has been degraded by the inherent SIN X/X sampling function. The AF134 filter approximates the required function that is necessary to compensate the frequency response and restore a flat band pass response.

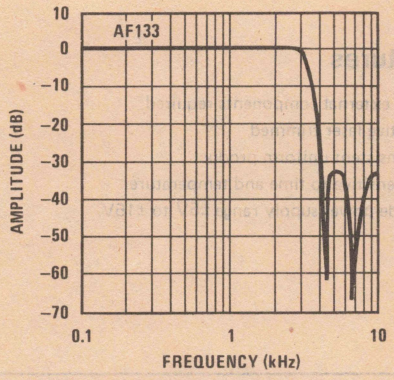

AF133 Transmit Filter

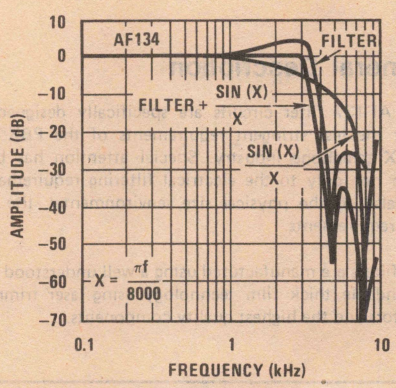

AF134 Receive Filter

National Semiconductor

Active Filters

PRELIMINARY

AF137 Dual PCM Transmit/Receive Filter

General Description

The AF137 filter circuits are specifically designed to meet the less stringent requirements of the PBX and PABX telephone industry. Special attention has been given not only to the electrical filtering requirements, but also to the physical size, environmental, life and cost requirements.

The filters are manufactured using a well understood and dependable thick film technology using laser trimmed resistors and the highest quality components.

Features

- No external components required
- Active laser trimmed
- Consistent uniform product
- Insensitive to time and temperature
- Wide power supply range ±5V to ±15V

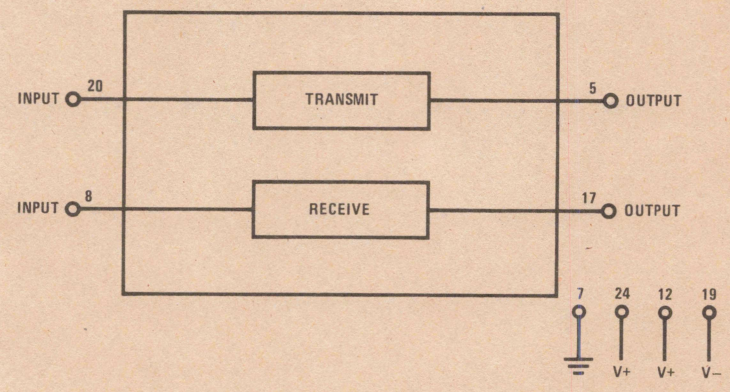

Ceramic Dual-In-Line
Package HY24A
AF137-CJ

Absolute Maximum Ratings

Supply Voltage	±18V
Power Dissipation	1W/Package
Input Voltage	±18V
Output Short-Circuit Duration	Continuous
Operating Temperature Range	0°C to +70°C
Storage Temperature Range	−25°C to +100°C
Lead Temperature (Soldering, 10 seconds)	300°C

Electrical Characteristics

Unless otherwise noted, these specifications apply over the temperature range from 0°C to +70°C and are tested using ±12V power supplies, but are guaranteed for any symmetrical power supply operating between ±9V to ±15V.

PARAMETER		CONDITIONS	TRANSMIT			RECEIVE			UNITS
			MIN	TYP	MAX	MIN	TYP	MAX	
A_O	Voltage Gain	f = 800 Hz	−0.5	0	0.5	−0.5	0.14	0.5	dB
ΔA	Ripple	300 Hz ⩽ f ⩽ 3000 Hz (Note 1)		±0.2	±0.5		±0.25	±0.5	dB
A	Gain	f < 3400	−0.9	−0.45	0	−0.9	−0.54	0	dB
A	Gain (Stop Band)	f > 4000		−14.3	−13.5			−13.5	dB
A	Gain (Stop Band)	f > 4.6 kHz		−30	−29		−28	−27.5	dB
e_O	Output Voltage Swing	V_{CC} = ±12V, R_L = 2k		20		20			V_{p-p}
V_{OS}	Output DC Offset		−100		100	−100		100	mV
Z_{IN}	Input Impedance	DC to 10 kHz, T_A = 25°C		359k (Note 2)			81.5k		Ω
Z_O	Output Impedance	DC to 10 kHz, T_A = 25°C		0.5	1		0.5	1	Ω
N_V	Output Noise				15			15	dBrnco
PSRR	Power Supply Rejection Ratio	120 Hz to 3.4 kHz	40	97		40	97		dB
		3.4 kHz to 25 kHz	40	90		40	90		dB
P_D	Power Dissipation	V_{CC} = ±12V		135	220				mW
		V_{CC} = ±5V		40	80				mW

Note 1: For the receive section, ripple is specified as the deviation from the ideal pass band response that would result if the $\left[\frac{\sin \frac{\pi f}{8000}}{\frac{\pi f}{8000}}\right]$ roll-off characteristics were compensated perfectly, and assumes the inclusion of a sample and hold.

Note 2: Input impedance varies with frequency: DC = 354 kΩ, 10 kHz = 116 kΩ.

Applications Information

GENERAL

The transmit and receive filters are both third order elliptic low pass filters that have been specifically designed for 8 kHz sampled data systems found in telephone PCM communication systems and some military systems, *(Figure 1)*.

The transmit filter is designed to provide a flat band pass response from DC to 3.0 kHz and attenuate signals above 4.5 kHz to prevent these signals from occuring in the sampled data.

The receive filter is designed to receive the sampled data in order to reconstruct the original analog signal. Because the information has been processed through a sample and hold technique, the amplitude information in the band pass has a characteristic SIN X/X response. The purpose of the receive filter is to provide the necessary response to compensate for the input signal frequency response and restore the amplitude information to a flat band pass characteristic.

The block diagram in *Figure 2*, indicates the basic construction of the AF137.

All other pins not shown connected should be left open.

PROVIDING LOW FREQUENCY ROLL-OFF

In most systems, it is necessary to have a low frequency high pass filter in front of the transmit filter to attenuate 60 Hz and 120 Hz. Some attenuation can be achieved by capacitively coupling the input signal, with the proper value of capacitor, C, selected to trade off 60 Hz attenuation with the amount of band pass

Applications Information (Continued)

flatness near 300 Hz. The capacitor is easily selected since the input impedance (resistive only) is specified. A second, and more desirable solution, is shown in *Figure 4*. This filter makes use of the AF100 as a second order high pass filter. It provides 22 dB of attenuation of 60 Hz, and has less than 0.03 dB effect on the band pass characteristics at 300 Hz.

TESTING

The circuit in *Figure 5* is typical of that used by National Semiconductor to test the active filters. In testing and in actual application, the filter must be driven from a low impedance source ($R_S \leq 50\Omega$).

CODEC

National Semiconductor presently manufactures two monolithic circuits designed to perform the entire companding coder/decoder function. Before proceeding with your design, please contact National for information about these devices, the MM58100 and the LF2700.

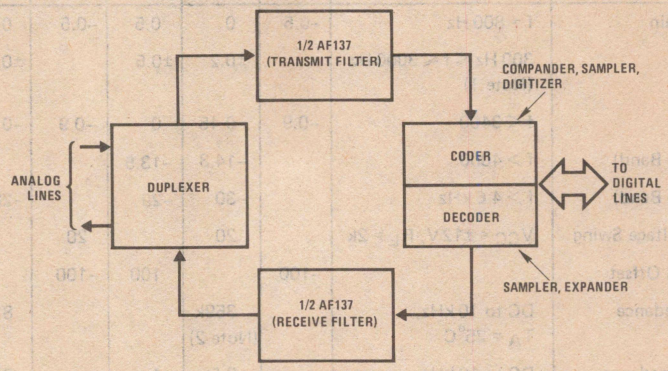

FIGURE 1. PCM Block Diagram

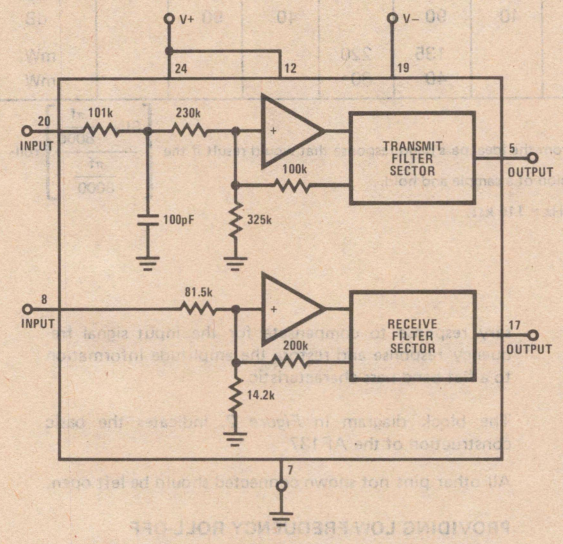

FIGURE 2. Functional Diagram of AF137

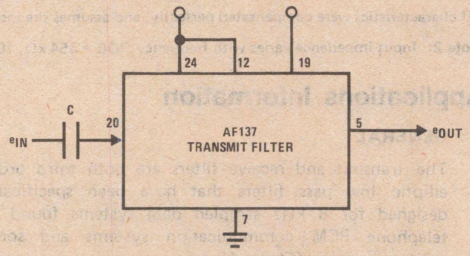

FIGURE 3. Capacitive Coupling to Provide Low Frequency Roll-Off

Applications Information (Continued)

FREQUENCY	ATTENUATION
60 Hz	−22 dB
120 Hz	−6 dB
180 Hz	−1.5 dB
300 Hz	−0.03 dB

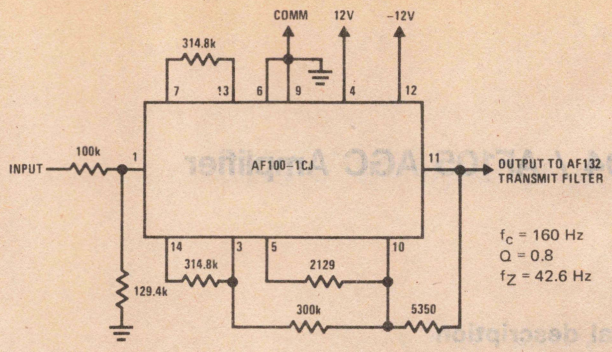

FIGURE 4. Providing 60 Hz Attenuation

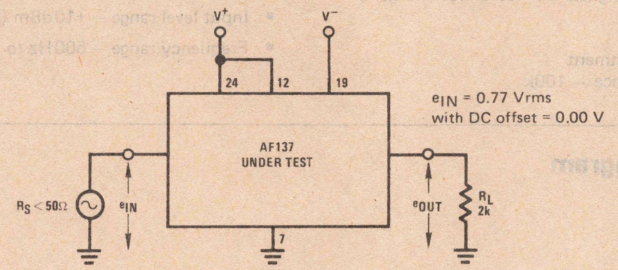

FIGURE 5. Test Circuit

AF137 TRANSMIT FILTER SECTION

The transmit section is a third order elliptic low pass filter designed to provide a flat amplitude response from 300 Hz to 3.0 kHz, and 29 dB or more attenuation of signals above 4.6 kHz.

AF137 RECEIVE FILTER SECTION

The receive section is a third order elliptic low pass filter designed to receive PCM information. Because this information has been transmitted in a sampled data PCM system, the amplitude information has been degraded by the inherent SIN X/X sampling function. The receive filter approximates the required function that is necessary to compensate the frequency response and restore a flat band pass response.

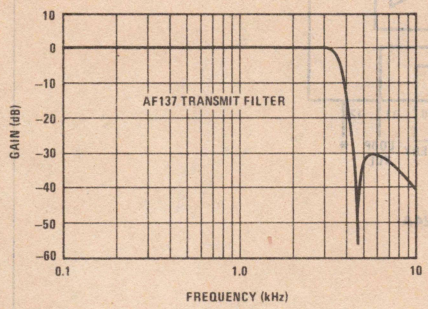

Transmit Filter

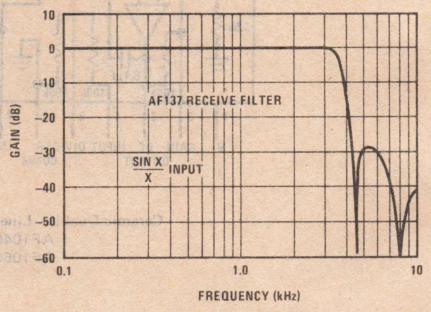

Receive Filter

National Semiconductor

AF104 / AF105 AGC Amplifier

general description

The AF104 AGC Amplifier is a direct coupled amplifier whose voltage gain is internally controlled by the output signal. The gain control feedback system is AC coupled so that DC signals do not affect the gain.

features

- Optional gain adjustment
- High input impedance — 100k
- 0dBm output level
- Internal reference
- Wide supply voltage range — ±9V to ±18V
- Input level range — +10dBm (2.45V RMS)
- Frequency range — 500Hz to 10kHz

connection diagram

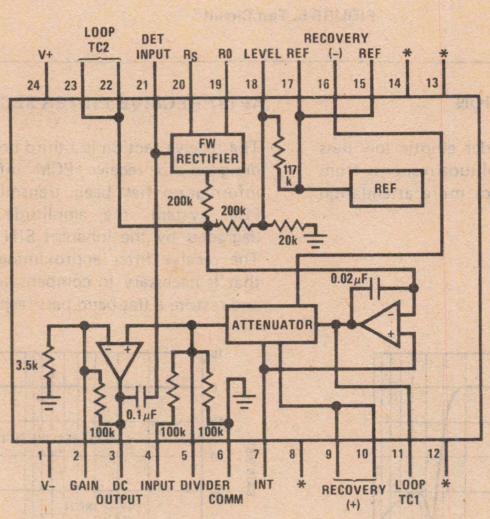

Ceramic Dual-In-Line Package HY24A
AF104CJ
AF105CJ

*Internally connected. DO NOT USE.

absolute maximum ratings

Supply Voltage	±18V
Power Dissipation	1W
Input Voltage	±36V
Output Short Circuit Duration	Infinite
Lead Temperature (soldering, 10 sec.)	300°C
Operating Temperature Range	0°C to +70°C
Storage Temperature Range	−25°C to +100°C

electrical characteristics

V_S = ±12V to ±15V, T_A = 0°C to 70°C, unless otherwise specified.

PARAMETER	SYMBOL	CONDITIONS	MIN	TYP	MAX	UNITS
Output Level	V_O	Single 1 kHz tone of −22 ⩽ A ⩽ +10 dBm	−0.35	0	0.35	dBm
Input Level	V_{IN}		−20		+10	dBm
Input Impedance	Z_{IN}			100		kΩ
Open Loop Gain	A_O	AF104 AF105	21.4 22.4	22 23	22.6 23.6	dB dB
Output Impedance	Z_O			< 1		Ω
Recovery Time		Input step from no signal, 0 dBm, 1 kHz tone		5		ms
Power Supply Voltage	V_S		±9		±18	V
Power Supply Current V^+	I_S^+			5.5	11	mA
V^-	I_S^-			2.5	5	mA
Operating Frequency Range			0.5	0.3 To 12	10	kHz

equivalent circuit

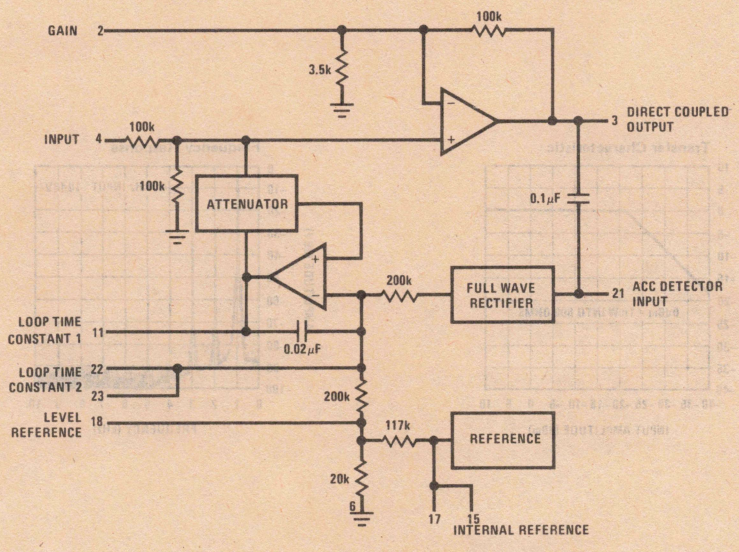

OPEN LOOP GAIN ADJUSTMENT

The open loop gain is internally set to 21dB but can be externally adjusted by adding one external resistor. The practical limits are 0dB to 40dB. When the gain is increased the bandwidth is decreased.

OUTPUT LEVEL ADJUSTMENT

The output level can be adjusted by connecting a 100k pot between pin 17 and ground with the wiper arm connected to pin 18. Output level can be adjusted ±10dB without affecting other parameters such as loop time constant and recovery time.

EXTENDING LOW FREQUENCY RESPONSE

An external capacitor in parallel with the internal loop time constant capacitor will extend the low frequency response and lower the distortion through the AGC. It has the effect of slowing the response time due to the longer loop time constant. To maintain amplitude stability at low frequencies an external capacitor should be added in parallel with the loop coupling capacitor.

test circuits

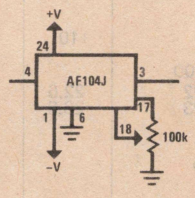

Output Level Adjust

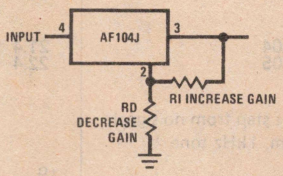

Open Loop Gain Adjust

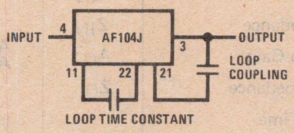

AGC Loop Response

typical performance characteristics

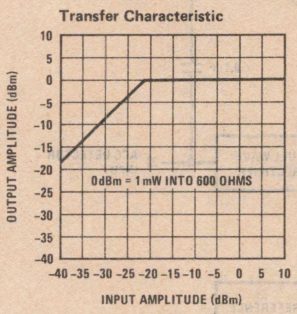

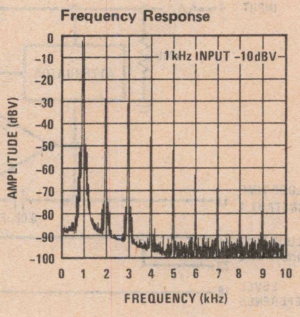

transient response

Input
0, 0.77V Step (1 kHz)

Output

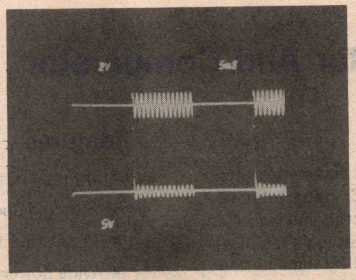

Input
0dBm, +6.0 dBm (1 kHz)

Output

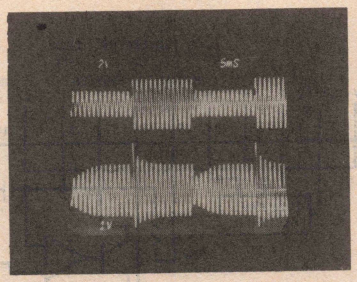

Input
−10dBm, −4.0 dBm (1 kHz)

Output

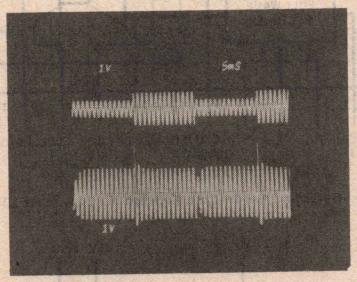

National Semiconductor

AF110 Dual Detector And Comparator

general description

The AF110 has two fullwave detector and comparator circuits designed to convert an AC input to logic output. The output is open collector and can be connected to be compatible with most logic families. A provision for hysterisis is provided by the addition of an external resistor. The threshold is set for −2.0dBm (600 ohm).

features

- Internal reference
- Floating open collector logic output
- Preset threshold
- Wide power supply range — ±9V to ±18V

connection diagram

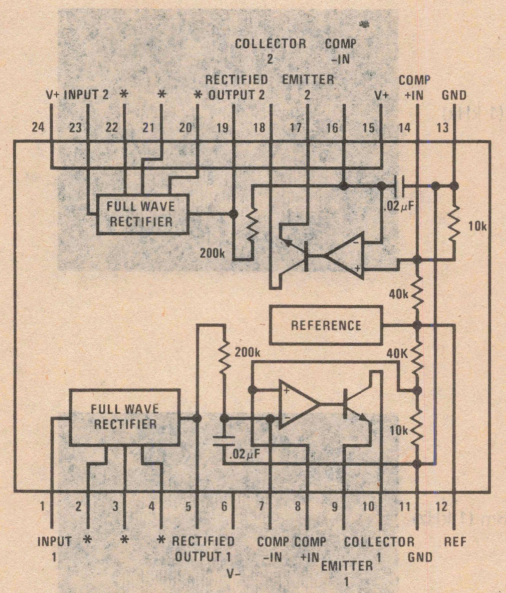

Ceramic Dual-In-Line Package HY24A — AF110CJ

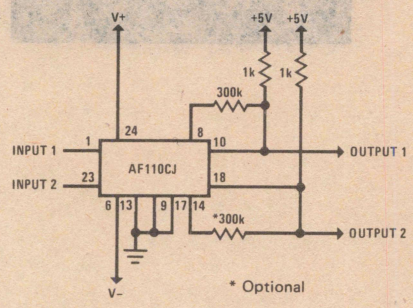

*Internally connected. DO NOT USE.

* Optional

Typical Connection for T2L Logic with Hysterisis

absolute maximum ratings

Supply Voltage	±18V
Power Dissipation	1W
Input Voltage	±36V
Output to Negative Supply Voltage ($V_{OUT} - V^-$)	50V
Ground to Negative Supply Voltage ($GND - V^-$)	30V
Output Short Circuit Duration	10 sec
Operating Temperature Range	0°C to +70°C
Storage Temperature Range	−25°C to +100°C
Lead Temperature (soldering, 10 sec)	300°C

electrical characteristics (each section) V_S = ±12V to ±15V, T_A = 0°C to 70°C, unless otherwise specified.

PARAMETER	SYMBOL	CONDITIONS	MIN	TYP	MAX	UNITS
Threshold (Note 1)	V_t	600 Hz ≤ f ≤ 1700 Hz	0.600	0.615	0.630	V_{RMS}
Output Saturation Voltage	V_{OL}	I_{OUT} = 50 mA, T_A = 25°C			1.5	V
Output Leakage Current	I_{OH}	V_{OUT} = 35V, T_A = 25°C		1	10	nA
Saturation Voltage	V_{OL}	$V^+ \geq 4.5V$, $V^- = 0V$, $I_{SINK} \leq 8mA$			0.4	V
Power Supply Current V^+	I_S^+	V_S = ±15V		11.5	18	mA
V^-	I_S^-			10.5	12	mA
Input Impedance	Z_{IN}			50k		Ω
Power Supply Voltage	V_S		±9		±18	V

Note 1: Tone present — output transistor saturated; tone not present — output transistor off or switching at a rate greater than one transition per 10 msec.

test circuit

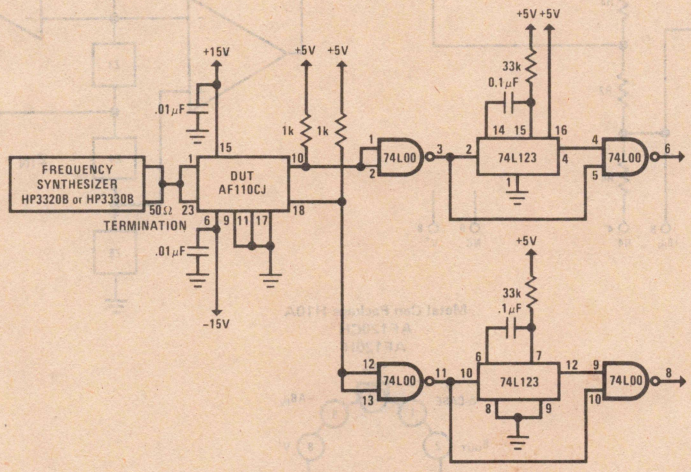

AF110CJ Switching Threshold

National Semiconductor

AF120 Generalized Impedance Converter, GIC

general description

The AF120 contains a pair of operational amplifiers and four precision thin film resistors connected as shown below. A gyrator may be formed by adding one external capacitor; or a frequency dependent negative resistance FDNR may be formed by adding two external capacitors. In the gyrator mode, $Z_{IN} \propto j\omega C$, which is equivalent to a grounded inductor. In the FDNR mode, $Z_{IN} \propto -1/\omega^2 C1C2$. The AF120 may also be used in pairs to form ungrounded inductors or inductor networks. Thus, with appropriate transformations, the GIC makes possible an active realization of any low-frequency ladder filter network. The advantage of ladder filters being, of course, that they exhibit lower sensitivity to component variations than any other type of filter realization. Temperature coefficient of the internal resistors is equal and opposite in sign to that of polystyrene capacitors, thus RC products exhibit approximately zero TC.

features

- Matched internal resistors 7500Ω ±0.1%
- Resistor TC = +110 ±30 ppm/°C
- Supply voltage ±5 to ±18V
- Input impedance 7500Ω

applications

- Gyrator, $Z \propto s$
- Frequency dependent negative resistance, $Z \propto 1/s^2$
- Use in low-frequency active ladder filter networks

schematic and connection diagrams

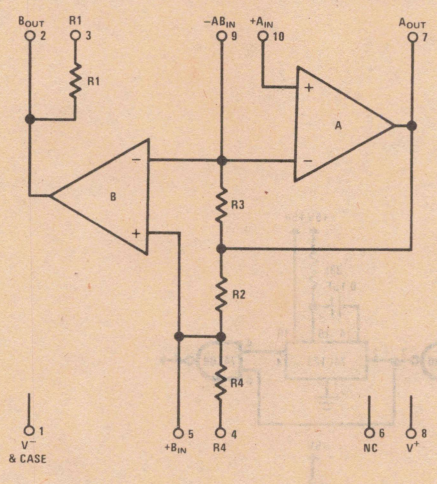

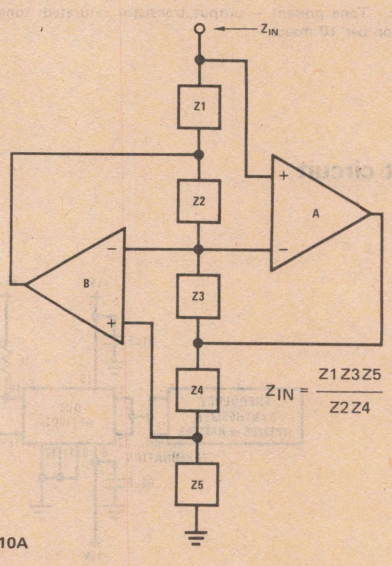

Metal Can Package H10A
AF120CH
AF120H

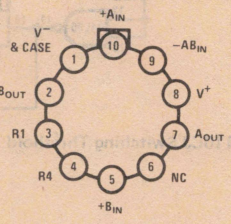

TOP VIEW

absolute maximum ratings

Supply Voltage, V_S	±18V
Power Dissipation, $T_A = 25°C$	500 mW
Derate 18 mW/°C above 60°C	
Operating Temperature, T_A	
AF120	−55°C to +125°C
AF120C	−25°C to +85°C
Storage Temperature, T_{STG}	−65°C to +150°C
Lead Temperature (Soldering, 10 seconds)	300°C

electrical characteristics $T_A = 25°C$, $V_S = \pm5$ to $\pm15V$, except as noted

PARAMETER		CONDITIONS	AF120			AF120C			UNITS
			MIN	TYP	MAX	MIN	TYP	MAX	
$\lvert Z_{IN}\rvert$	Input Impedance		7425	7500	7575	7350	7500	7650	Ω
θ	Phase (Note 1)	*(Figure 1)*	89.5	90	90.5	89	90	91	DEG.
V_{OS}	DC Voltage measured at Input Terminal			1	8		1	10	mV
	R1, R2, R3, R4		7485	7500	7515	7470	7500	7530	Ω
	R2/R3		0.999	1.000	1.001	0.998	1.000	1.002	
TC	Resistor Temp. Coeff.		80	110	140	50	110	170	ppm/°C
V_O	Op Amp Output Voltage	$V_S = \pm15V$, $R_L = 2k$	±10	±13		±10	±13		V
I_{SC}	Op Amp Short-Circuit Output Current	$V_S = \pm15V$		20			20		mA
I_S	Supply Current	$V_S = \pm15V$		3	5.6		3	5.6	mA

Note 1: 90° indicates that connection actually simulates a pure inductor.

typical performance characteristics

Equivalent Inductance vs Frequency

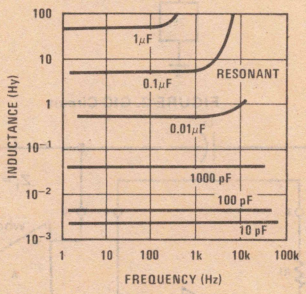

FDNR Value vs Frequency

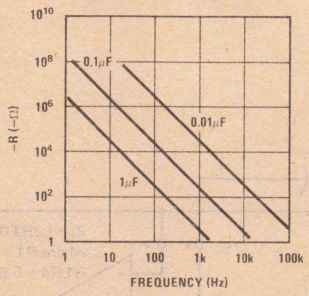

Equivalent L and D vs Capacitor Values

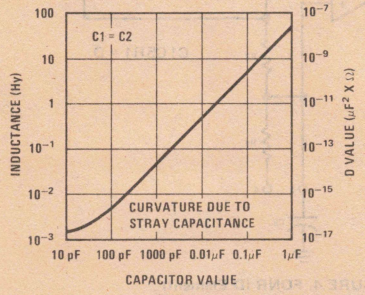

Maximum Terminal Voltage vs Frequency

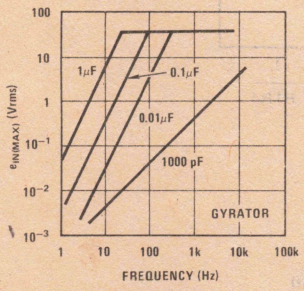

Maximum Terminal Voltage vs Frequency

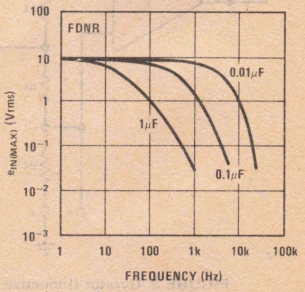

applications information

The generalized impedance converter GIC is a versatile tool for realization of inductive components in low-sensitivity filters. The driving point impedance is $Z_i(s) = k(s)\ Z_L(s)$. The input impedance of the AF120 is

$$Z_i = \frac{Z1Z3Z5}{Z2Z4} \quad \text{(Refer to } \textit{Figure 2}\text{)}$$

which reduces to

$$Z_i = \frac{Z1Z5}{Z2}$$

since Z3 = R3, Z4 = R2 and R2 = R3. No more than one or two of Z1, Z2 and Z5 may be external capacitors. Internal resistor R4 is available for use as Z5, and internal resistor R1 may be used as either Z1 or Z2. External resistors of other values may be substituted for R1 or R4 if proper attention is paid to temperature coefficients. The TC of internal resistors is +110 ±30 ppm/°C to compensate for the TC of polystyrene capacitors.

The AF120 may be used for the following impedance conversions:

Positive impedance converter (PIC) – k(s) is positive and real

$$Z2 = R1,\ Z5 = R4,\ k = R4/R1 = +1,$$

$$Z_i(\omega) = Z1(\omega) \quad \text{(trivial case)}$$

Positive impedance inverter (PII) – k(s) is positive and real

$$Z1 = R1,\ Z5 = R4,\ k = R1R4 = (7500)^2$$

$$Z_i(\omega) = R1R4/Z2(\omega)$$

If Z2 is an external capacitor, then $Z_i(\omega) = R1R2j\omega C$, and $Z_i(s) \propto (s)$

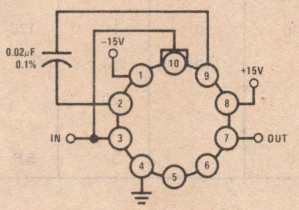

$V_{IN} \leq 1Vrms$ @ 1053 Hz

FIGURE 1. Test Circuit

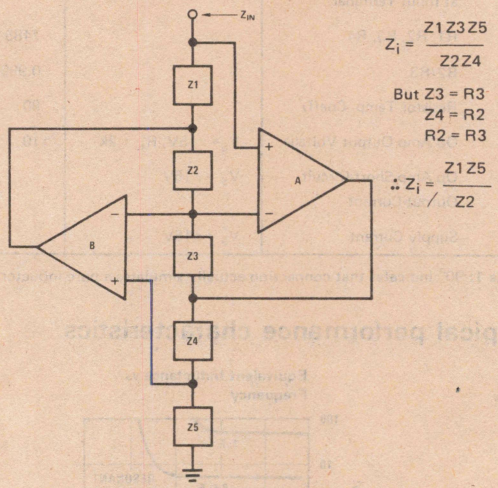

FIGURE 2. GIC Circuit

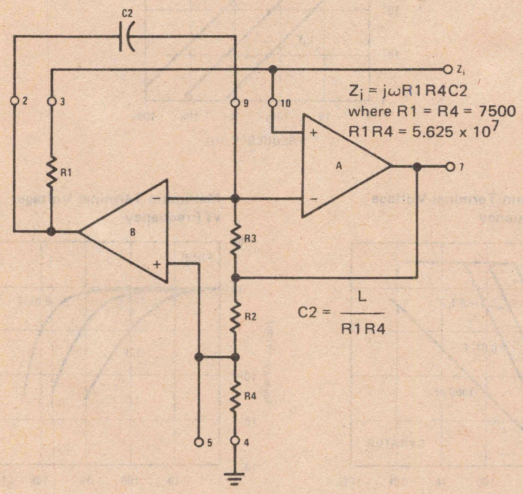

FIGURE 3. Gyrator (Inductive Element)

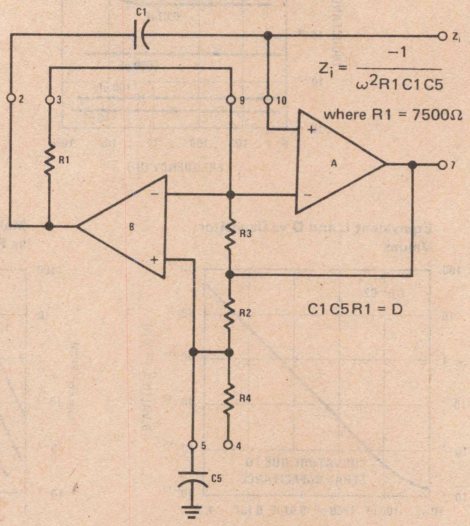

FIGURE 4. FDNR (D Element)

applications information (con't)

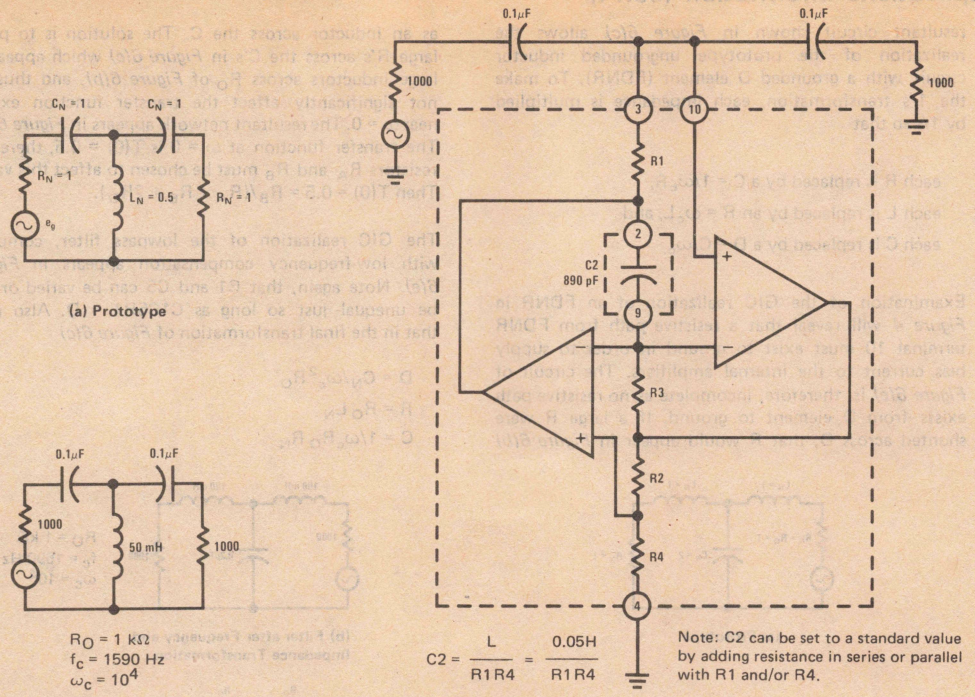

FIGURE 5. Third-Order Butterworth Highpass Filter

Frequency dependent negative resistance (FDNR)

$$Z2 = R1,\ k = 1/R1$$
$$Z_i = Z1(\omega)Z5(\omega)/R1$$

If Z1 and Z5 are both external capacitors, then $Z_i = -1/R1\omega^2C1C5$, and $Z_i(s) \propto -1/s^2$

GIC elements are especially useful for active simulation of low-sensitivity passive ladder filters. Symmetrically terminated ladder filters exhibit an exceptionally low sensitivity to changes in network element value; in fact, they exhibit the lowest sensitivity of any filter type. This means that practical realization of multistage filter functions may be achieved with moderate tolerance components, and that component shifts due to temperature variations will have minimal effect on the filter transfer function. Additionally, a great deal of ladder filter design information exists in handbook form; hence the value of the GIC as a network element. Several examples are given on the following pages for the realization of filters with grounded inductors, with ungrounded inductors, and with both grounded and ungrounded inductors.

Highpass Filter (with Grounded Inductors)

Figure 5 shows the development of the GIC active realization of the prototype ladder filter of *Figure 5(a)*. The network is first designed with normalized values for all components. Next, the component values are transformed according to the desired characteristic impedance and cutoff frequency of the filter. To transform from prototype normalized values where $R_O = 1$ and $\omega_c = 1$,

$$\left.\begin{array}{l}\text{Multiply all R and L by } R_O \\ \text{Divide all C by } R_O \\ \text{Divide all L and C by } \omega_c\end{array}\right\}\text{ to obtain }\left\{\begin{array}{l}R = R_O R_N \\ L = R_O L_N/\omega_c \\ C = C_N/R_O\omega_c\end{array}\right.$$

where N subscripts indicate original normalized values.

Lowpass Filter (with Ungrounded Inductors)

Since the simple GIC realization of an inductor results only in a grounded inductor, a network transformation is necessary in order to use the GIC in a lowpass filter. *Figure 6* shows the frequency and impedance transformation of the prototype lowpass filter, followed by a 1/s impedance transformation. When this 1/s transformation is made, the performance of the filter is unchanged, therefore the transformation is valid. The

applications information (con't)

resultant circuit shown in *Figure 6(c)* allows the realization of the prototype ungrounded inductor circuit with a grounded D element (FDNR). To make the 1/s transformation, each impedance is multiplied by 1/s so that

each R is replaced by a $C = 1/\omega_c R$,

each L is replaced by an $R = \omega_c L$, and

each C is replaced by a $D = C/\omega_c$.

Examination of the GIC realization of an FDNR in *Figure 4* will reveal that a resistive path from FDNR terminal 10 must exist to ground in order to supply bias current to the internal amplifiers. The circuit of *Figure 6(c)* is, therefore, incomplete as no resistive path exists from D element to ground. If a large R were shunted across D, that R would appear in *Figure 6(b)* as an inductor across the C. The solution is to place large R's across the C's in *Figure 6(c)* which appear as large inductors across R_O of *Figure 6(b)*, and thus do not significantly affect the transfer function except near $\omega = 0$. The resultant network appears in *Figure 6(d)*. The transfer function at $\omega = 0$ is $T(0) = 0.5$, therefore resistors R_A and R_B must be chosen to affect this value. Then $T(0) = 0.5 = R_B/(R_A + R_B + 2R_O)$.

The GIC realization of the lowpass filter, complete with low-frequency compensation appears in *Figure 6(e)*. Note again, that C1 and C5 can be varied or can be unequal just so long as C1C5R1 = D. Also note that in the final transformation of *Figure 6(c)*

$$D = C_N/\omega_c^2 R_O$$
$$R = R_O L_N$$
$$C = 1/\omega_c R_O R_N$$

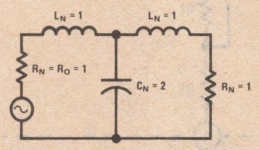

(a) Prototype

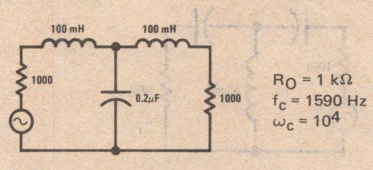

(b) Filter after Frequency and Impedance Transformation

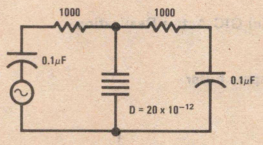

(c) Filter after 1/s Transformation

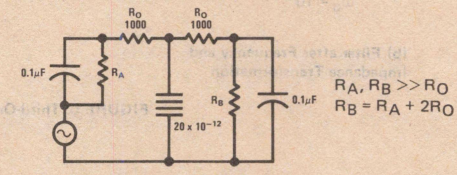

(d) Final Circuit with Low-Frequency Compensation

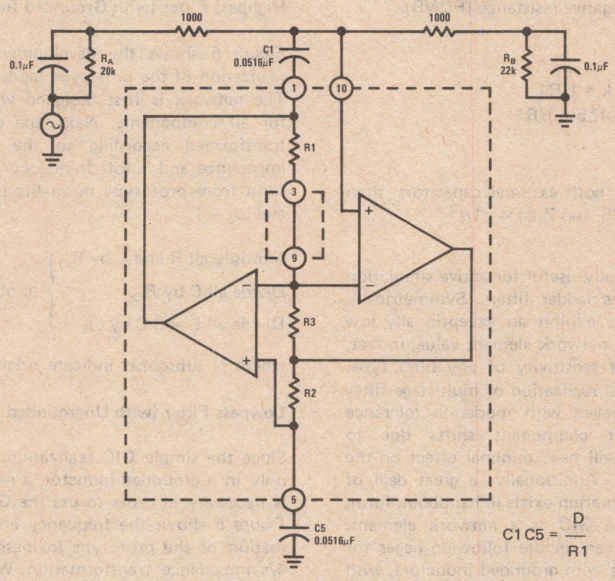

(e). Active Realization

FIGURE 6. Third-Order Butterworth Lowpass Filter

applications information (con't)

GIC Embedding

Ungrounded inductors may be simulated by embedding an ungrounded resistor between two GIC's as shown in *Figure 7(a)*. Actually, the embedded element may be any 2 or 3-terminal network and the GIC may be given any of its realizable impedance transformations $Z(s)$, $Z(s^{-2})$, $Z(s^{-1})$ or $Z(s^2)$*.

Bandpass Filter (with Grounded and Ungrounded Inductors)

Direct RC active simulation of this filter requires the use of GIC embedding techniques (as described above) because there is no transformation which will eliminate all ungrounded L or D elements. *Figure 8* shows the step-by-step realization of a 6-pole Butterworth bandpass filter.

The filter circuit of *Figure 8(c)* constructed with AF120 and with R and C values shown performed as indicated in the plot of *Figure 9*. Note that the band center and cutoff frequencies occur at the design points as indicated by the phase measurements at 0°C and ±135°C.

The circuit of *Figure 8(c)* is simplified with a shorthand notation for the GIC's. This shorthand circuit is equivalent to the GIC as shown in *Figure 10*.

The final circuit for the bandpass filter of *Figure 8* contains six capacitors, one for each pole of the 6-pole network. This circuit then contains a minimum number of reactive elements to satisfy the prototype design. A dc path to ground exists for all GIC elements in this design so no additional resistors are needed for dc compensation. Note also that even though one and two percent components have been used throughout the circuit and the $C_D C_C$ product is in error by 3%, performance is as designed. It should be clear from this exercise that ladder networks of virtually any complexity may be realized using the AF120 GIC circuit.

*$Z(s^2)$ is not realizable with the AF120.

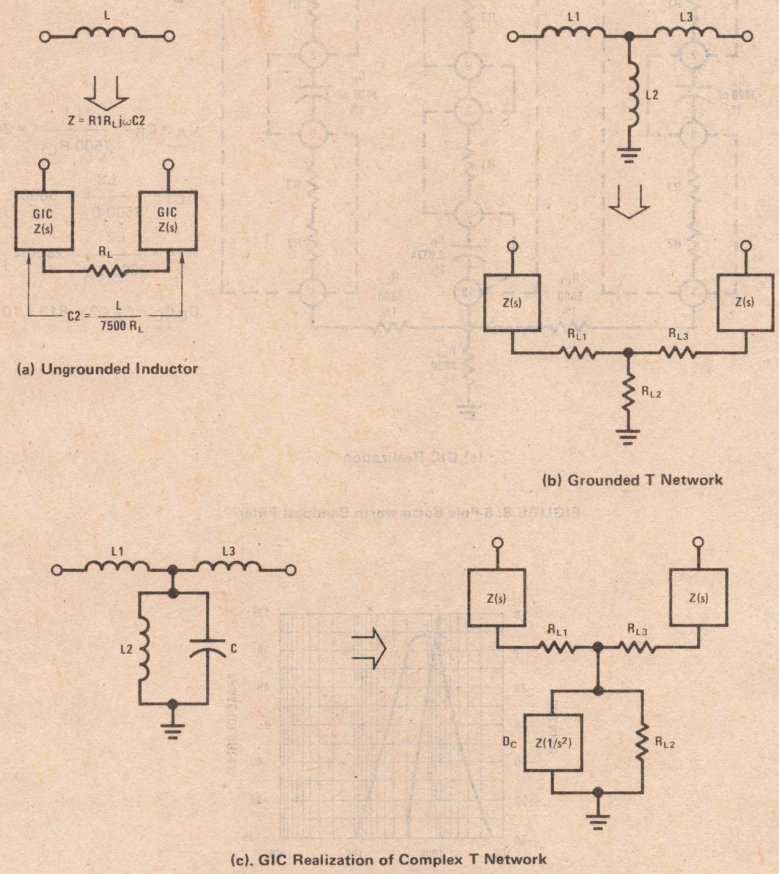

(a) Ungrounded Inductor

(b) Grounded T Network

(c). GIC Realization of Complex T Network

FIGURE 7. GIC Realization of Ungrounded Inductors and T Networks

applications information (con't)

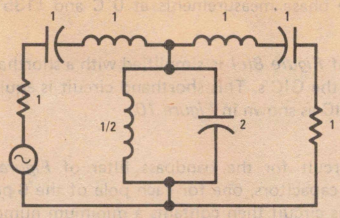

(a) Prototype

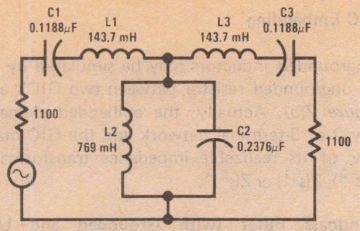

$R_O = 1100\Omega$
$f_O = 1218$ Hz
$f_L = 752.8$ Hz
$f_H = 1970.8$ Hz

(b) Filter after R_O and ω_O Transformations

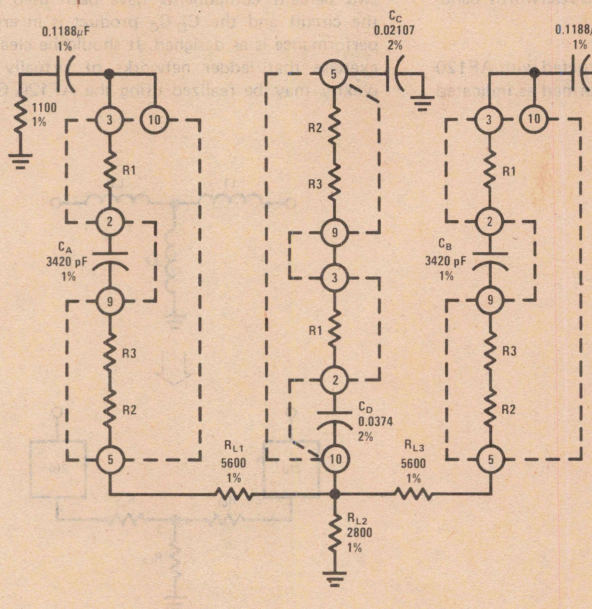

$$C_A = C_B = \frac{L1}{7500\ R_{L1}} = 3420\ \text{pF}$$

$$R_{L3} = \frac{L3}{7500\ C_A} = 5600\Omega$$

$$R_{L2} = \frac{L2}{7500\ C_A} = 2800\Omega$$

$$C_D C_C = C_A C2 = 812 \times 10^{-6}\ \mu F^2$$

(c) GIC Realization

FIGURE 8. 6-Pole Butterworth Bandpass Filter

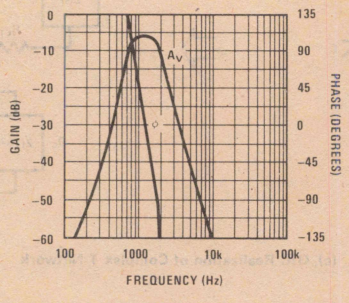

FIGURE 9. Gain and Phase Transfer Functions of the Filter of Figure 8(c).

applications information (con't)

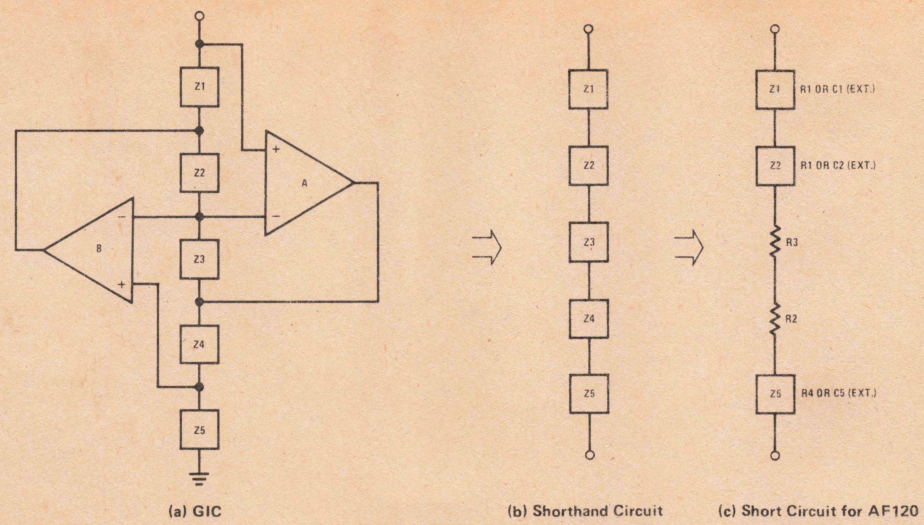

FIGURE 10. Development of GIC Shorthand Circuit

Section 15

Precision Networks

15

National Semiconductor

Precision Networks

RA201 Precision Instrumentation Amplifier Resistor Network

General Description

The RA201 is a family of precision instrumentation amplifier networks. This device, when combined with 3 operational amplifiers, provides a precision instrumentation amplifier with common-mode rejection up to 100 dB. All gain setting resistors are provided within the device. This feature assures excellent thermal tracking and thermal matching of all resistors. This network is manufactured using a high stability thin-film technology. Thin-film resistors provide tracking temperature coefficients of better than 5 ppm/°C. The thin-film resistors are laser trimmed to guarantee resistor matching to 0.05% for the RA201-2, and 0.1% for the RA201-1.

Other applications include process control interfacing and precision decade dividers.

Features

- Gain programmable
- Matching accuracies to 0.05%
- Matching temperature coefficient to 5 ppm/°C
- Absolute temperature coefficient to 80 ppm/°C
- Close thermal proximity of all resistors
- Standard dual-in-line package
- Low-cost

Connection Diagram

Dual-In-Line Package

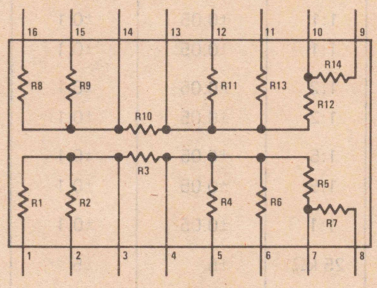

TOP VIEW

R1 = 252.525 . . Ω
R2 = 2.777 . . . kΩ
R3 = 25k
R4 = 25k
R5 = 25k
R6 = 6.25k
R7 = 25k
R8 = 252.525 . . . Ω
R9 = 2.777 . . . kΩ
R10 = 25k
R11 = 25k
R12 = 25k
R13 = 6.25k
R14 = 25k

R3:R2 = 9:1
R3:R1 = 99:1
R3||R2 = 2.50k
R3||R1 = 250.0Ω
R5||R6 = 5.0k

Typical Application

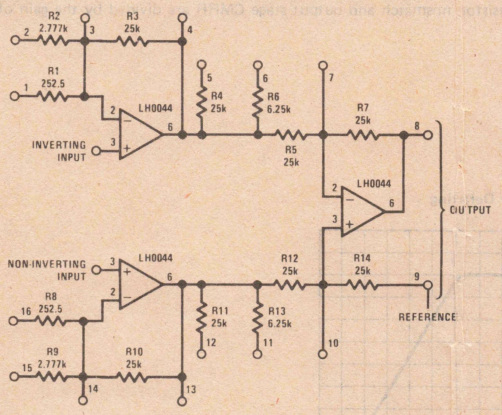

Overall Gain	Input Stage Gain	Output Stage Gain	Jumper Pins on RA201
X1	X1	X1	–
X2	X1	X2	5 to 7, 12 to 10
X5	X1	X5	6 to 7, 11 to 10
X10	X10	X1	2 to 15
X20	X10	X2	2 to 15, 5 to 7, 12 to 10
X50	X10	X5	2 to 15, 6 to 7, 11 to 10
X100	X100	X1	1 to 16
X200	X100	X2	1 to 16, 5 to 7, 12 to 10
X500	X100	X5	1 to 16, 6 to 7, 11 to 10
X995	X199	X5	1 to 14, 6 to 7, 11 to 10

Precision Instrumentation Amplifier

Absolute Maximum Ratings

Rated Voltage Between Sections	200V
Rated Voltage Across Resistors	(Note 1)
Package Power Dissipation at 25°C (See Curve)	2.0W
Individual Resistor Power at 25°C	0.25W
Operating Temperature Range	
RA201-1N, RA201-2N	−25°C to +85°C
RA201-1D, RA201-2D	−55°C to +125°C
Storage Temperature Range	−55°C to +150°C
Lead Temperature (Soldering, 10 seconds)	300°C

Electrical Characteristics $T_A = 25°C$ (Note 2)

PARAMETER	CONDITIONS; RESISTORS TESTED	TYP	RA201-2 MAX	RA201-1 MAX	UNITS
Input Stage x10	R2:R3	1:9	±0.05	±0.1	%
	(R2||R9):(R3||R10)	1:9	±0.05	±0.1	%
Input Stage x100	R1:R3	1:99	±1	±1	%
	(R8||R1):(R3||R10)	1:99	±1	±1	%
Output Stage x1	R7:R5	1:1	±0.05	±0.1	%
	R14:R12	1:1	±0.05	±0.1	%
Output Stage x2	(R4||R5):R7	1:2	±0.05	±0.1	%
	(R12||R11):R14	1:2	±0.05	±0.1	%
Output Stage x5	(R6||R5):R7	1:5	±0.05	±0.1	%
	(R12||R13):R14	1:5	±0.05	±0.1	%
Output Stage CMRR	(R7:R5):(R14:R12), (Note 3)	1:1	±0.05	±0.1	%
Absolute Tolerance	R3	25 kΩ	±5	±5	%
Absolute Tempco		80			ppm/°C

Note 1: Rated voltage is limited by the individual resistor power rating of 0.25W. For example, a 25k resistor could withstand a maximum of $V = \sqrt{(0.25)(25{,}000)} = 79V$. This rating may need to be reduced to be consistent with maximum package power if several resistors are dissipating power simultaneously.

Note 2: Resistor ratios shown apply at $T_A = 25°C$; for $T_{MIN} \leq T_A \leq T_{MAX}$ the ratio tolerances are double the specifications shown.

Note 3: This test guarantees the CMRR contributed by resistance mismatch. In low gain applications, all 3 amplifiers contribute strongly to the overall CMRR. In high gain applications, the degradation due to resistor mismatch and output stage CMRR are divided by the gain of the input stage.

Typical Performance Characteristics

Power Derating

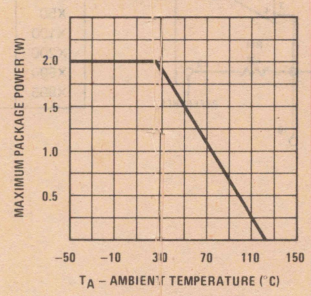

Applications Information

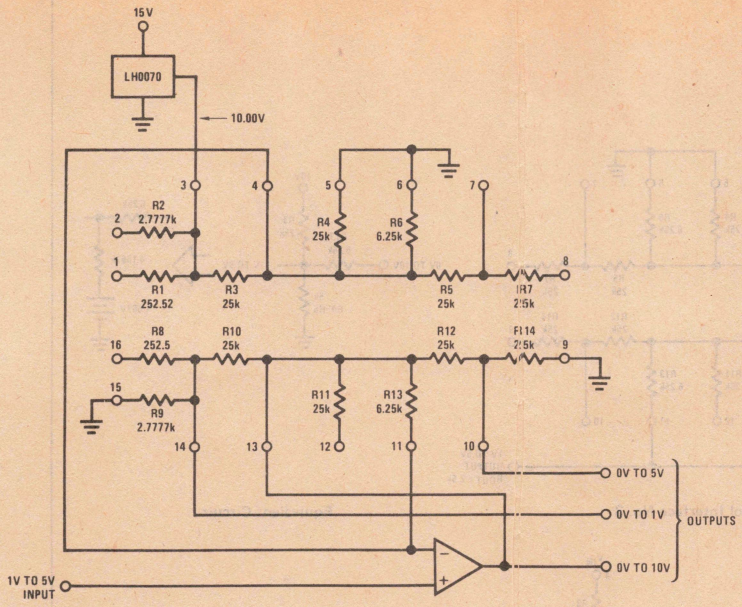

RA201 Process Control Interface No. 1

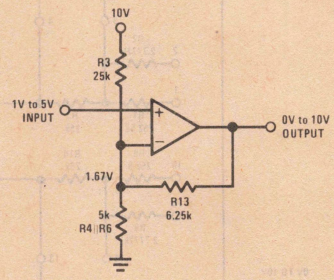

Equivalent Circuit

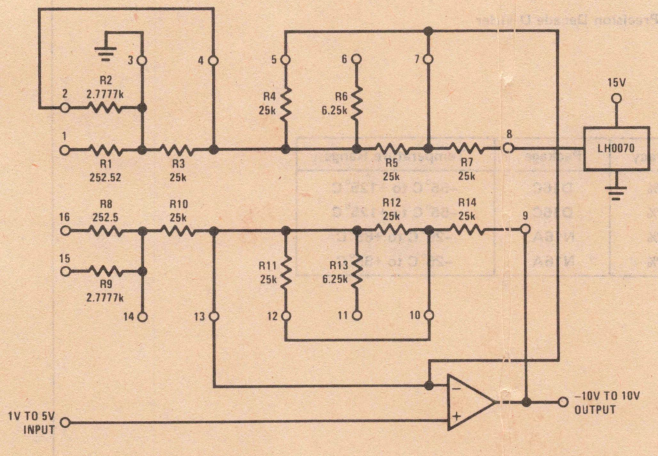

RA201 Process Control Interface No. 2

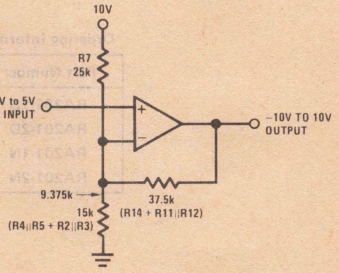

Equivalent Circuit

Applications Information (Continued)

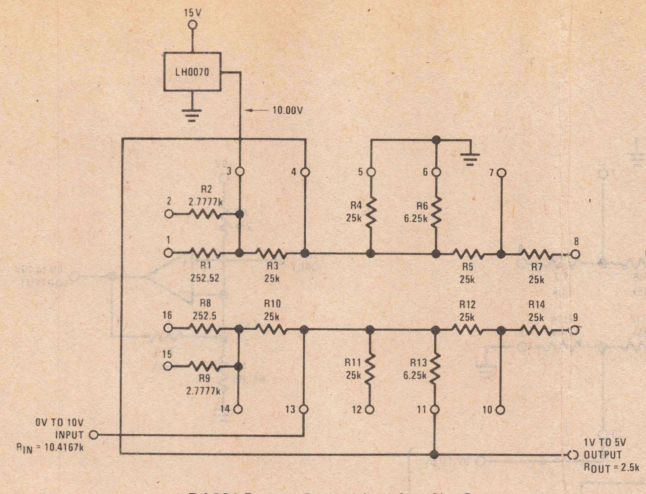

RA201 Process Control Interface No. 3

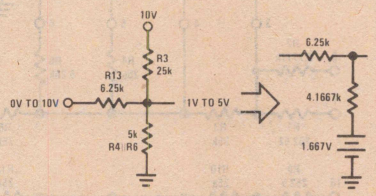

Equivalent Circuit

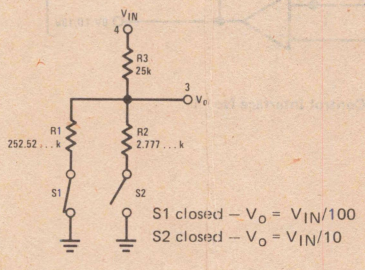

Precision Decade Divider

Ordering Information

Part Number	Accuracy	Package	Temperature Range
RA201-1D	0.1%	D16C	–55°C to +125°C
RA201-2D	0.2%	D16C	–55°C to +125°C
RA201-1N	0.1%	N16A	–25°C to +85°C
RA201-2N	0.2%	N16A	–25°C to +85°C

Section 16

Application Notes

16

Low Power Operational LH0001 Amplifier

National Semiconductor
Application Note 10
W. B. Mitchell
December 1968

INTRODUCTION

Although many Integrated Circuit Operational Amplifiers are available with excellent characteristics, two areas leave considerable room for improvement; namely, offset voltage and power requirements. The LH0001 operational amplifier has been designed to provide extremely low offset voltages (typically 0.2 millivolts at 25°C) and quiescent supply currents in the 100 μA range, while still providing reasonable loaded output swings and a compensated gain bandwidth in the 0.5 to 1.0 MHz range. The circuit diagram (Figure 1A and 1B) shows the simplicity of the LH0001; the only unusual characteristic being the use of PNP transistors in the input stages for improved beta vs. temperature linearity and lower noise.

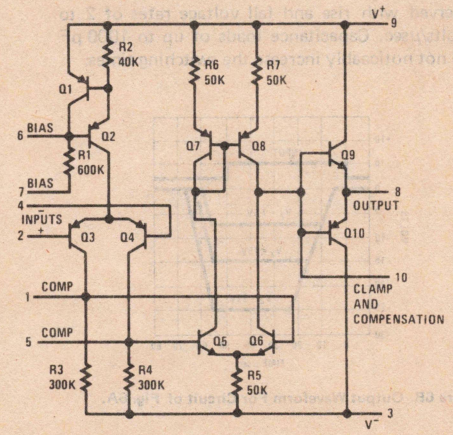

Figure 1A. LH0001 Schematic.

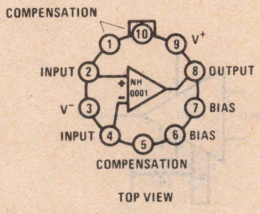

Figure 1B. LH0001 Pin Configuration.

CIRCUIT OPERATION

Q1, Q2, R1 and R2 form a simple constant current supply of ≈16 μA at 25°C, 8 μA at +125°C and 22 μA at -55°C. This current is supplied to the common emitters of the input pair Q3 and Q4 which, along with their load resistors R3 and R4, form a simple differential amplifier. The low frequency gain of this stage is approximately 30, minimizing the effect on the input of changes in offset voltage in the second stage pair, Q5 and Q6.

The second stage differential pair with high impedance load, Q8, form the main voltage gain of the amplifier. Typical values of collector currents in Q5 and Q6 are 20 μA each and the voltage gain of this stage is approximately 2000.

The output section is simply a compound NPN – PNP pair providing isolation between the high impedance junction of the collectors of Q6 and Q8, and the load.

Operation from Single Power Supply

When operating from ±V supplies, pin 7 is normally returned to ground. When operating from a single supply, or when no ground is available, pin 7 may be directly connected to pin 3, for voltages equal to or less than 20 volts between pins 3 and 9. This will increase the quiescent current since the effect of connecting pin 7 to pin 3 is to connect the 600K resistor, R1, across the full power supplies. Since the minimum current required from pin 7 is 10 μA, an external resistor (Rx) may be inserted in series with R1 from pin 7 to pin 3.

Recommended range for value of Rx is shown in Figure 2.

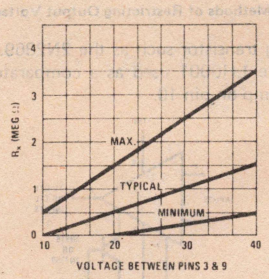

Figure 2. Range of Resistor Values Inserted from Pin 7 to Pin 3 when Pin 7 is not grounded.

Clamped Output Swing

The output voltage can be quite effectively held between specified limits by means of diode clamps on pin 10. From Figure 3 which is the output section of the LH0001, clamping pin 10 will maintain the output within one V_{BE} of pin 10. Since $I_{B(+)}$ and $I_{B(-)}$ are limited to approximately 75 μA at 25°C, the extra quiescent current is quite nominal.

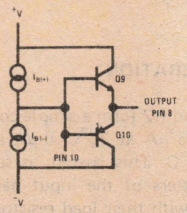

Figure 3. Output of LH0001

A specified output range may be obtained by appropriate connection of diodes from pin 10 to the reference limits. Figure 4 shows the connections for various reference levels.

A typical use of a clamp on pin 10 is to provide compatible drive for either DTL or T^2L logic circuits. This is usually accomplished with a 5 volt Zener diode or the emitter-base junction of a

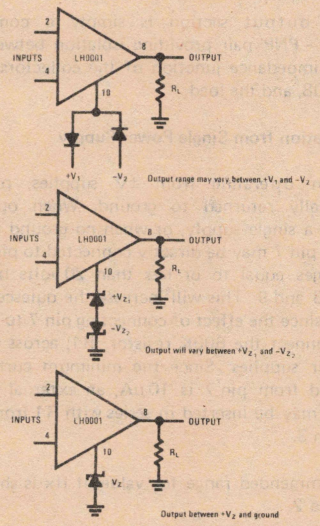

Figure 4. Methods of Restricting Output Voltage Swing.

switching transistor such as the 2N2369. Figure 5 shows the LH0001 used as a comparator with a diode clamp on pin 10.

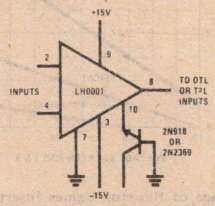

Figure 5A. LH0001 As comparator For Driving DTL or T2L.

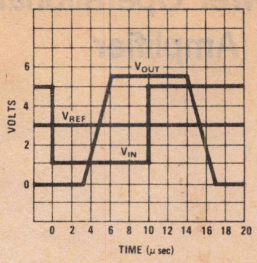

Figure 5B. Output Waveform When Used in Circuit of Fig. 5A.

For driving MOS inputs or clocks, the LH0001 is connected as follows:

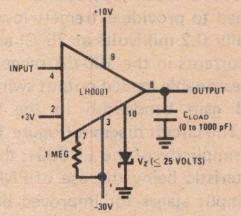

Figure 6A. LH0001 As Comparator For Driving MOS.

Delay and storage times of 3 to 5 μsec will be observed with rise and fall voltage rates of 2 to 4 volts/μsec. Capacitance loads of up to 1000 pF will not noticeably increase the switching times.

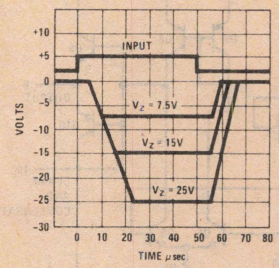

Figure 6B. Output Waveform For Circuit of Fig. 6A.

Input Offset Voltage Balancing

Although the offset voltage of the LH0001 is quite low, it is possible that even lower values are required. Figure 7 shows the recommended balancing technique.

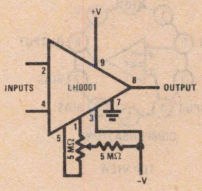

Figure 7. Method of Balancing Input Offset Voltage.

Input Bias Current Compensation

Methods of compensation recommended in NS Application Note AN-3 can all be successfully used with the LH0001 with the exception that all polarities are reversed and NPN bias transistors substituted for the PNP units. Transistor type 2N2484 units are recommended, For optimum compensation over a wide temperature range, the method of generating the emitter current of the compensating transistor shown in Figure 4 and 6 of AN-3 should be modified to be similar to the current source used in the LH0001. Figure 8 shows the recommended circuit.

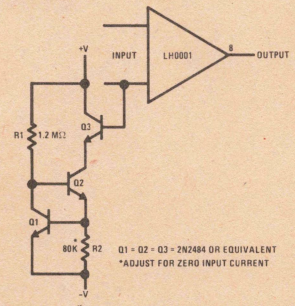

Figure 8. Method of Compensating for Input Bias Current.

Increased Output Swing

For lightly loaded outputs (RL $\geq$ 10K), the maximum negative output swing will exceed the positive swing by approximately a volt. If the maximum positive swing is required, it may be obtained by connecting a low capacitance (C $\leq$ 2 pF at zero volts) diode between pins 1 and 5, with the cathode on pin 1. Table 1 shows the typical positive and negative swing with RL = 100 KΩ both with and without the diode clamp.

TABLE 1 Maximum Output Swings vs Supply Voltage

Supply Voltage	±5V	±10V	±15V	±20V
Typical Negative Output	3.8	8.8	13.5	18.4
Typical Positive Output without Diode Clamp	2.7	7.6	12.2	17.0
Typical Positive Output with Diode Clamp	3.6	8.4	13.0	18.0

$T_A = 25°C$

As explained in the following section, the inclusion of a diode from pin 1 to 5, in addition to increasing the available positive output voltage, will also reduce the maximum positive short circuit current.

Reducing the Short-Circuit Current

As mentioned above, a diode connected from pin 1 to pin 5 will reduce the positive output short circuit current. If the polarity of the diode is reversed, the negative short circuit current will be similarly reduced. If 2 diodes are connected from pins 1 to 5 in opposite directions, the short circuit current will be reduced in both the positive and negative direction.

Figure 9 shows the connections and Figure 10 gives the typical short circuit currents available both with and without the diode clamps.

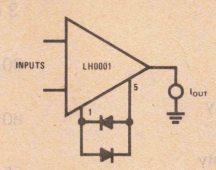

Figure 9. Method of Reducing Output Short Circuit Current.

If this control is not adequate, external limiting as shown in Figure 11 can be used to limit I_{OUT} to less than 1 mA.

Referring to Figure 2, in the limiting mode, the V_{BE} of the conducting output transistors (Q9 or Q10) will add to the drop across R_{LIM} to be equal to the sum of the two forward drops of conducting diodes between pin 10 and the output. Thus the output current will be limited to that value which causes approximately one diode forward

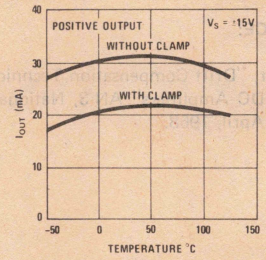

Figure 10A. Short Circuit Output Current.

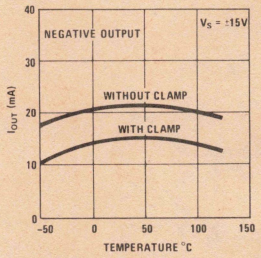

Figure 10B. Short Circuit Output Current.

drop across R_{LIM}. In addition, the diode current which may be as high as 75 μA at 25°C will be added to the output current.

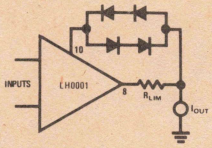

Figure 11. Alternate Method of Limiting Output Short Circuit Current.

Typical Performance of the LH0001 Operational Amplifier ($V_S = \pm 15V$, $T = 25^\circ C$)

PARAMETER	CONDITION	VALUE
Input Offset Voltage	$R_S \leq 5K$	0.2 mV
Input Offset Current		3 nA
Input Bias Current		30 nA
Positive Supply Current		80 μA
Negative Supply Current		55 μA
Voltage Gain	$R_L = 100K$	60,000
Output Voltage	$R_L = 100K$	±12V
CMRR	$R_S \leq 5K$	90 dB
PSRR	$R_S \leq 5K$	96 dB
Temperature Range		$-55^\circ C$ to $125^\circ C$
Temperature Drift		4 $\mu V/^\circ C$
Supply Voltage Range		±5V to ±20V

REFERENCE:

R. J. Widlar, "Drift Compensation Techniques for Integrated DC Amplifiers" AN-3, National Semiconductor, April, 1968.

Application of the LH0002 Current Amplifier

National Semiconductor
Application Note 13
September 1968

INTRODUCTION

The LH0002 Current Amplifier integrated building block provides a wide band unity gain amplifier capable of providing peak currents of up to ±200 mA into a 50 ohm load.

The circuit uses thick film technology to integrate 2 NPN and 2 PNP complementary matched silicon transistors with 4 cermet resistors on a single alumina ceramic substrate. A circuit schematic is shown in Figure 1. The negative thermal feedback provided by the close proximity of the components on a single substrate eliminates any thermal runaway problem that could occur if this circuit were constructed using discrete components.

A typical circuit features a dynamic input impedance of 200 Kohms, an output impedance of 6 ohms, DC to 50 MHz bandwidth, and an output voltage swing that approaches supply voltage. A complete list of the guaranteed and typical values for the electrical characteristics under the stated conditions is given in Table 1. These features make the LH0002 ideal for integration with an operational amplifier inside a closed loop configuration

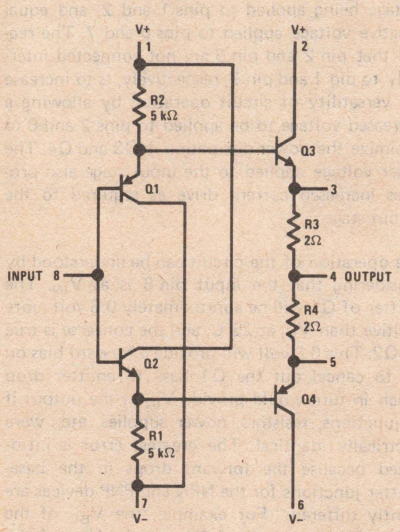

FIGURE 1. Circuit Schematic

TABLE 1. Electrical characteristics, specification applies for T_A = 25°C with +12.0V on pins 1 and 2; –12.0V on pins 6 and 7.

PARAMETERS	CONDITIONS	MIN	TYP	MAX	UNITS
Voltage Gain	R_S = 10 kΩ, R_L = 1.0 kΩ V_{IN} = 3.0 V_{PP}, f = 1.0 kHz T_A = –55°C to 125°C	.95	.97		
Input Impedance	R_S = 200 kΩ, V_{IN} = 1.0 V_{rms}, f = 1.0 kHz, R_L = 1.0 kΩ	180	200	–	kΩ
Output Impedance	V_{IN} = 1.0 V_{rms}, f = 1.0 kHz R_L = 50Ω, R_S = 10 kΩ	–	6	10	Ω
Output Voltage Swing	R_L = 1.0 kΩ, f = 1.0 kHz	±10	±11	–	V
DC Input Offset Voltage	R_S = 10 kΩ, R_L = 1.0 kΩ T_A = –55°C to 125°C	–	±40	±100	mV
DC Input Offset Current	R_S = 10 kΩ, R_L = 1.0 kΩ T_A = –55°C to 125°C	–	±6.0	±10	μA
Harmonic Distortion	V_{IN} = 5.0 V_{rms}, f = 1.0 kHz	–	0.1	–	%
Bandwidth	V_{IN} = 1.0 V_{rms}, R_L = 50Ω, f = 1 MHz	30	50	–	MHz
Positive Supply Current	R_S = 10 kΩ, R_L = 1 kΩ	–	+6.0	+10.0	mA
Negative Supply Current	R_S = 10 kΩ, R_L = 1 kΩ	–	–6.0	–10.0	mA

to increase its current output. The symmetrical class B output portion of the circuit also provides a constant low output impedance for both the positive and negative slopes of output pulses.

CIRCUIT OPERATION

The majority of circuit applications will use symmetrical power supplies, with equal positive voltage being applied to pins 1 and 2, and equal negative voltage applied to pins 6 and 7. The reason that pin 2 and pin 6 are not connected internally to pin 1 and pin 7, respectively, is to increase the versatility of circuit operation by allowing a decreased voltage to be applied to pins 2 and 6 to minimize the power dissipation in Q3 and Q4. The larger voltage applied to the input stage also provides increased current drive as required to the output stage.

The operation of the circuit can be understood by considering that the input pin 8 is at V_{IN}. The emitter of Q1 will be approximately 0.6 volt more positive than V_{IN} at 25°C, and the converse is true for Q2. This 0.6 volt will provide a forward bias on Q3 to cancel out the Q1 base to emitter drop which in turn would provide V_{IN} at the output if all junctions, resistors, power supplies, etc., were electrically identical. The greatest error is introduced because the forward drops in the base-emitter junctions for the NPN and PNP devices are slightly different. For example, the V_{BE} of the NPN will be typically 0.6V and the V_{BE} of the PNP will be typically 0.64V under the same conditions of $I_C = 2.4$ mA at $V_{CE} = 12.0$V at 25°C. These are the approximate input stage circuit conditions for Q1 and Q2 for plus and minus 12V supplies. Fortunately, this error in both input and output offset voltage is almost always negligible when it is used inside the closed loop of a high gain operational amplifier.

A plot of input impedance vs frequency is shown in Figure 2. Inspection of this plot shows that the input impedance can be closely approximated to that of a simple first order linear network with a 45° phase lag at 0.6 MHz and a 90° phase lag at approximately one decade higher in frequency. This information is very useful for designers who have to integrate circuits which have large source

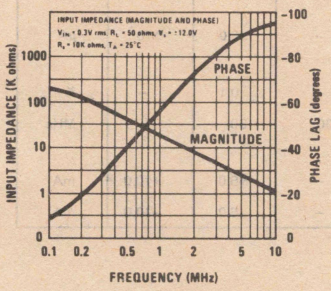

FIGURE 2. Input Impedance vs Frequency

impedances over a wide frequency range. The output impedance of the amplifier is very low, 6 ohms typically, and in conjunction with a voltage bandwidth of approximately 50 MHz can be considered to be insignificant for most applications for this type of device.

A plot of the voltage bandwidth is shown in Figure 3. Inspection of this plot shows that phase information as well as gain information was included to assist users of this device. For example, at 10 MHz, less than an 8° phase lag would be subtracted from the phase margin of an operational amplifier when it is integrated with this device. The open loop gain of the operational amplifier would be decreased by less than 10% at 10 MHz and therefore can be considered to be insignificant for most applications.

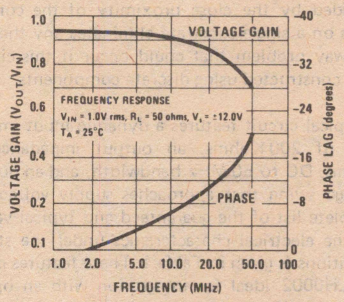

FIGURE 3. Frequency Response

APPLICATIONS

Figure 4 shows the LH0002 integrated with the LH0005 to provide differential inputs and outputs. In order for this circuit to funtion properly, a load must be floated between the outputs of the two devices to provide a complete loop of feedback. A differential head on a scope across the load presents a true waveform of the actual signal being applied to it. If only one end of the load is displayed, it will appear distorted because this information is being fed back negatively to the input in order to cancel out the loop distortion of the overall amplifier. With the compensation shown, a 20V peak to peak signal can be applied to a 100 ohm load to 80 KHz. The overall circuit is approximately 33% efficient under these conditions. A derating factor and/or heat sink must be used at higher temperatures, as shown by the LH0002 and LH0005 data sheets.

Additional output power could also be obtained by connecting another LH0002 to pin 9 of the operational amplifier. The overall load distortion under high circuit voltage gain configurations would also be reduced using two LH0002's because the LH0002 is more linear than the simple output circuits of these particular operational amplifiers.

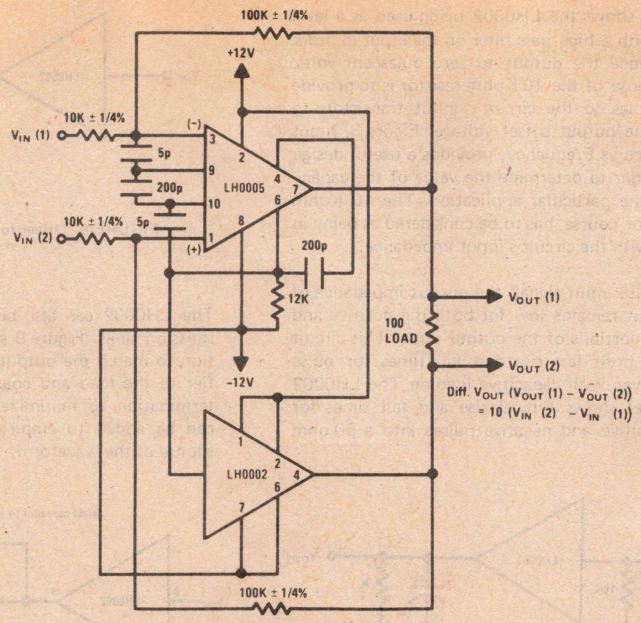

FIGURE 4. Differential Input-Output Operational Amplifier Integration

Figure 5 shows the LH0002 integrated with the LH101 in a booster follower configuration. The configuration is stable without the requirement for any external compensation; however, it would behoove the designer to be conservative and bypass both the negative and positive power supplies with at least a 0.01 μf capacitor to cancel out any power supply lead inductance. A 100 ohm damping resistor, located right at the input of the LH0002, might also be required between the operational amplifier and the booster amplifier. The physical layout will determine the requirement for this type of oscillation suppression. Current limiting can be added by incorporating series resistors from pins 2 and 6 to their respective power supplies. The exact value would be a function of power supply voltage and required operating temperature.

A breadboard of this configuration was assembled to empirically check the increase in offset voltage due to the addition of the LH0002. The offset voltage was measured with and without an LH0002 inside the loop with a voltage gain of 100, at −55°C, 25°C and 125°C. The additional offset voltage was less than 0.3% for all three temperature conditions even though the offset voltage of the LH0002 is much higher than that of the LH101. The high open loop gain of the LH101 divides out this source of circuit error. The integration of this device also allows higher closed loop circuit gain without excessive cross-over distortion than would be obtainable with the simple booster amplifier shown in Figure 6.

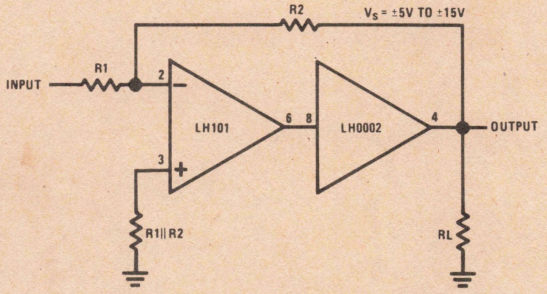

FIGURE 5. LH101-LH0002 Booster Amplifier Integration.

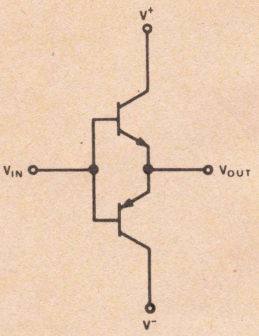

FIGURE 6. Simple Booster Amplifier

Figure 7 shows the LH0002 being used as a level shifter with a high pass filter on the input in order to reference the output to zero quiescent volts. The purpose of the 10 Kohm resistor is to provide current bias to the circuit's input transistors to reduce the output offset voltage. Figure 3, Input Impedance vs Frequency, provides a useful design aid in order to determine the value of the capacitor for the particular application. The 10 Kohm resistor, of course, has to be considered as being in parallel with the circuit's input impedance.

For a pulse input signal, the output impedance of the circuit remains low for both the positive and negative portions of the output pulse. This circuit provides both fast rise and fall times for pulse signals, even with capacitive loading. The LH0002 data sheet shows typical rise and fall times for both positive and negative pulses into a 50 ohm load.

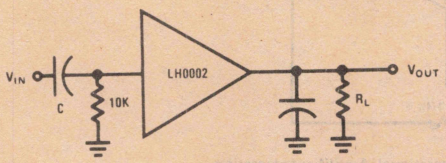

FIGURE 7. Level Shifter

Figure 8 shows the LH0002 being used to drive a pulse-transformer. The low output offset voltage allows the pulse transformer to be directly coupled to the amplifier without using a coupling capacitor to prevent saturation. The pulse transformer can be used to change the amplitude and impedance level of the pulse, the polarity of the pulses, or, with the aid of a center-tapped winding, positive and negative pulses simultaneously.

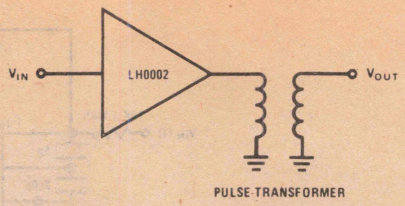

FIGURE 8. Driver for a Pulse-Transformer

The LH0002 can also be used to drive long transmission lines. Figure 9 shows a circuit configuration to match the output impedance of the amplifier to the load and coaxial cable for proper line termination to minimize reflections. A capacitor can be added to empirically adjust the time response of the waveform.

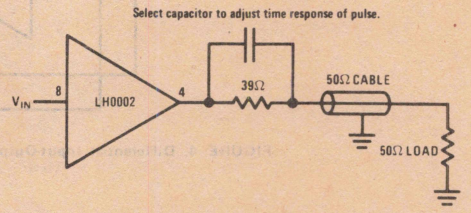

FIGURE 9. Transmission Line Driver

SUMMARY

The multitude of different applications suggested in this article shows the versatility of the LH0002. The applications specially covered were for a differential input-output operational amplifier, booster amplifier, level shifter, driver for a pulse-transformer, and transmission line driver.

High-Speed MOS Commutators

National Semiconductor
Application Note 28
Dale Mrazek
January 1970

Speed and accuracy of MOS analog commutators are being improved sharply by techniques initially developed to make large-scale MOS digital integrated circuits compatible with bipolar logic circuits. Now, TTL logic can drive an MOS commutator at rates up to 20 MHz, with signal accuracies better than 90%. And at lower frequencies, accuracies very close to 100% can be achieved.

In the past, MOS monolithic commutators and multiplexers were recommended for precision analog switching only at relatively low rates, on the order of 10 kHz. Commutation at higher rates was considered risky because of large noise transients produced by the MOS switching transistors. Considerable time had to be allowed for the transients to settle down before the signal could be sampled accurately.

Transient noises have been reduced to at least half their former level by processes that lower the switching-voltage threshold of the MOS transistors. The processes also cut impedance and leakage current, permitting low-impedance designs that further enhance commutator performance.

Although they switch analog voltages, the MOS field-effect transistors in these commutators can be interfaced with logic ICs almost as readily as low-voltage MOS ICs. Either MOS or bipolar logic can control the MOSFET gate voltages. Only a few volts change in the gate voltage will turn the MOSFETs on or off.

Examples of new multichannel designs for analog/digital data-gathering applications are shown in Figures 1 and 2. Circuit impedances have been optimized in each so that commutation rates are much higher than the normal 200 to 500 kHz rate of low-voltage MOS commutators (rates, incidentally, about twice as high as the maximum rates of high-threshold commutators). The all-MOS system in Figure 1 operates at 1 MHz, while the MOS/TTL system in Figure 2 achieves 20 MHz.

LOWERING THRESHOLD VOLTAGES

Reducing the MOSFET switching-threshold voltage, V_{TH}, improves most of the characteristics that affect commutator performance. Chief result is a reduction in the gate-voltage change needed to

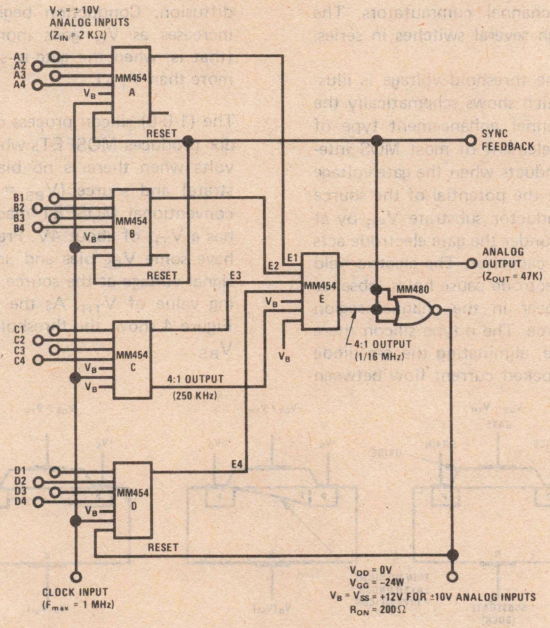

FIGURE 1. All-MOS 1-MHz Multiplexer or Commutator

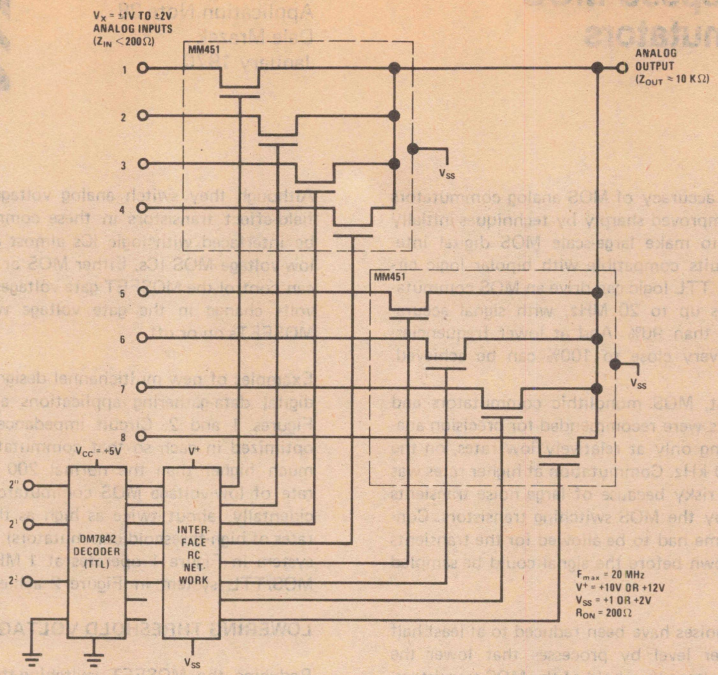

FIGURE 2. Hybrid MOS/TTL 20-MHz Commutator for Low-Level Signals

switch the MOSFET on and off. In turn, switching times and the noise transients and circuit impedances that produce signal errors can all be reduced. The benefits of lowering V_{TH} are additive, particularly in multichannel commutators. The signal may go through several switches in series.

The importance of the threshold voltage is illustrated in Figure 3, which shows schematically the operation of a p-channel enhancement type of MOSFET (the basic element of most MOS integrated circuits). It conducts when the gate voltage is more negative than the potential of the source and the bulk semiconductor substrate V_{SS} by at least V_{TH}. The oxide under the gate electrode acts as the dielectric of a capacitor. The electric field applied to the gate electrode cause holes (absence of electrons) to appear in the channel region starting from the source. The n-type silicon there is converted to p-type, eliminating the p-n diode junctions that had blocked current flow between source and drain (the source is the most positive terminal). V_{TH} is the bias at which the layer of intrinsic semiconductor, with no surplus of electrons or holes, and the p-channel reach the drain diffusion. Conduction begins at this point and increases as V_G goes more negative than V_{TH} (that is, when the gate-to-source voltage $-V_{GS}$ is more than V_{TH}).

The (1-0-0) silicon process described in the appendix produces MOSFETs whose V_{TH} is 1.8 to 2.5 volts when there is no bias between bulk (substrate) and source (V_{BS} = 0). In comparison, a conventional MOSFET made with (1-1-1) silicon has a V_{TH} of about 4V. Practical MOS circuits do have some V_{BS} bias and usually some additional signal voltage at the source, which raise the working value of V_{TH}. As the typical V_{TH} curves in Figure 4 show, the threshold of a device rises with V_{BS}.

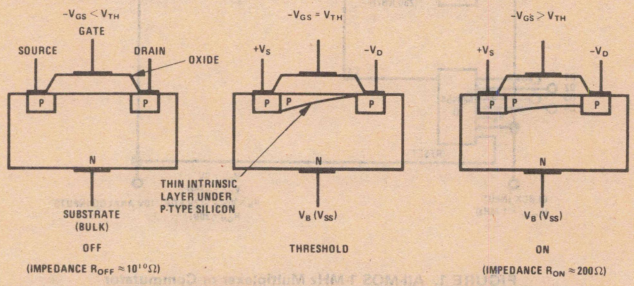

FIGURE 3. Channel Enhancement in MOS Transistors (P Channel)

A general equation describing these relationships is

$$V_{TH} = -K\left[\pm(2\phi_F + V_{BG})\right]^{1/2} + V_{SS}$$

where K is a device constant (usually 0.8 to 1.2) and $\pm 2\phi_F$ is the zero-bias threshold. This equation produces curves such as those in Figure 4.

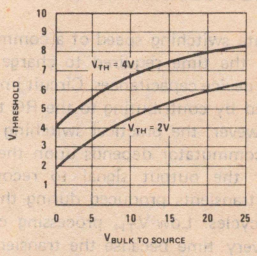

FIGURE 4. Typical Threshold-Voltage Curves

The MOSFET equivalent circuit (Figure 5) offers further insight into the importance of lowering V_{TH}. The smaller change in V_G means that smaller transient voltages will appear at source and drain. The transients are caused by charging and discharging of the capacitances. The time required to change V_G and the duration of the transients will be smaller, too. The value of R_{ON}, the MOSFET's impedance while conducting, will also be less at any given value of V_G more negative than V_{TH}. Any reduction in R_{ON} will make V_{OUT} more nearly equal to V_{IN}. The accuracy of an analog switch is determined by the ratio V_{OUT}/V_{IN}.

CONTROL VOLTAGES

Signal voltage V_X often varies between positive and negative values in commutator applications. To make certain that the MOSFET switches on under all signal conditions, V_G must swing from at least V_X to $(V_{SS}-V_{TH}-\Delta V-VX)$, where $\pm V_X$ are the signal limits and ΔV is the overdrive needed to lower the switch's series resistance to the desired level (mainly, reduction in R_{ON} obtained by making $-V_{GS}$ more negative).

If the signal range is fairly wide, say ±10V, the gate voltage of a MOSFET with a 4V to 6V threshold must swing from +10V to about −26V for accurate commutation. In contrast, a 2V threshold makes the necessary swing only from +10V to about −20V. The difference becomes more significant at lower signal voltages. At $V_X = \pm 1V$, for instance, the high V_{TH} device requires a swing from at least +1V to −10V, while the low V_{TH} device does the job with +1V to −6V – about a third less. High-speed, low-impedance TTL gates can control a commutator in the latter voltage range, as shown in Figure 2, because such small transitions can be made very rapidly. They are close enough to bipolar logic transitions for the use of simple, high-speed TTL-to-MOS interfaces.

Multichannel switches made with (1-0-0) silicon typically operate with a maximum change in control voltage of from +14V to −30V, which permits $V_X = \pm 14V$. Relatively few practical applications require so large a swing. If larger signal voltage must be handled, it would be cheaper to use a scaler than to pay the cost of a high-voltage multiplexer with beefed-up control circuitry.

ON AND OFF RESISTANCES

For best signal accuracy and maximum switching rate, impedances should be low. The resistance of a MOSFET while on, R_{ON}, varies with signal voltage, so it cannot be compensated readily. This produces a variable error term called R_{ON} modulation.

MOS commutators are usually structured as series switches (Figure 6a). Two or more ranks of commutators are generally used, as in Figure 1, to minimize the control circuitry. The added ranks put additional MOSFETs in each signal channel and enlarge the amount and variation in R_{ON} of the conducting channel. If V_X varies, the error ratio V_{OUT}/V_{IN} tends to vary because R_{ON} is a function of the effective switching threshold which rises and falls with V_X.

There is no simple way of keeping R_{ON} constant. Usually, the effect of the variation is reduced by increasing the other impedances, but that lowers the maximum switching rate. A low-V_{TH} eases this problem greatly. All other conditions being equal, the MOSFET with the lowest V_{TH} will conduct better at any given value of V_G more negative than V_{TH}. The p-channel enhancement will be greater

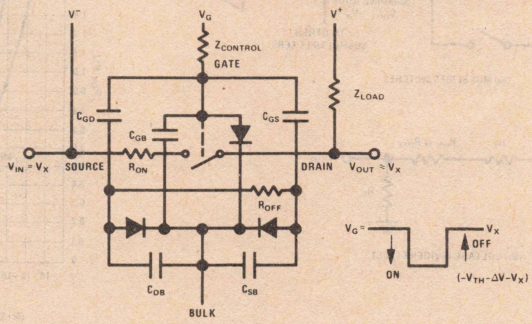

FIGURE 5. Equivalent Circuit of P-Channel MOSFET

and the channel electrically larger. Figure 6c is a typical curve of R_{ON} versus gate bias. Low-V_{TH} analog switches made with (1-0-0) silicon by National Semiconductor as integrated circuits achieve R_{ON} values comparable to those of larger, but higher-V_{TH}, discrete MOSFETs--from 250 to 300 ohms at V_X = −10V and about 100 ohms when V_X = +10V. The R_{ON} of a high-V_{TH} integrated commutator, in contrast, is typically a few hundred ohms higher and some reportedly reach a few kilohms.

To swamp out the voltage-divider effect in Figure 6b, it has been customary to make the load, R_L, much larger than the combination of R_{ON} and R_S. Output impedances in the megohm range are often used with high-V_{TH} devices. But note in Figure 2 that very low values of source and load impedance can be used with low-V_{TH} commutators. These low impedances and the very low impedance of the TTL circuit controlling the gate are two of the main reasons for this commutator's exceptionally high speed.

Source impedance is usually made equal or less than R_{ON} so that leakage currents of the turned-off MOSFETs can return to a low-impedance turned-on channel signal source. Leakage per switch is small in an integrated circuit commutator, but there are several switching devices with a common output in the same semiconductor substrate. Leakage currents could add up to a value that seriously degrades signal accuracy. In any semiconductor device, leakage increases rapidly with temperature. However, the leakage specification is so small in our commutator made with (1-0-0) silicon that they will work well up to a temperature of 125°C, while commutators made with (1-1-1) silicon have been specified for a maximum operating temperature of only 85°C.

Regardless of the process, the OFF resistance, R_{OFF}, of a well-made MOSFET is generally high enough to prevent the signal in the OFF channel (channel V_Y in Figure 6a) from appearing at the output and degrading the accuracy of the signal through the on channel (V_X in the figure). R_{OFF} is usually around 10^{10} ohms. If V_Y is a high-frequency signal, there may be significant AC feedthrough, but this can be prevented by techniques to be discussed shortly.

SWITCHING SPEED AND NOISE

The absolute switching speed of a commutator is limited by the time required to charge and discharge the device capacitances. Circuit impedances affect speed by contributing to the RC time constants. However, the practical switching rate of a precision commutator depends upon the time required for the output signal to recover from the noise transients produced during the charge-discharge cycles. Low-V_{TH} processing cuts transient recovery time because the transients' duration and amplitude are reduced. Some designs make the recovery time negligible.

In all MOSFETs, transmission of a turn-on or turn-off signal is followed by a delay whose length depends upon the magnitude and rate of change of the gate-control voltage. At turn-on, the delay is lengthened by the RC time constant of the gate-bulk capacitance (see Figure 5) and the impedance in the control circuit. Capacitances and impedances in the signal path cause a similar delay at turn-off. As V_{GS} goes negative, turning the switch on, energy is pulled from the source and load impedances through the gate-source and gate-drain capacitances, as in the simplified equivalent circuit of Figure 7a. At turn-off, V_{GS} goes to zero volts or positive, and energy is pushed out through the same paths.

Thus, negative turn-on and positive turn-off transients appear at the summing node. The transient waveforms of low V_{TH} and high V_{TH} MOSFETs are shown simplified and superimposed in Figure 7b. The levels are typical for devices with V_{TH} = 2V and V_{TH} = 4V at V_X = ±1V. The larger gate voltages used at higher signal voltages would make durations and amplitudes proportionately larger

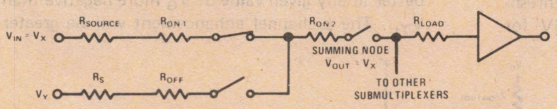

(6a) MOS SERIES SWITCHES

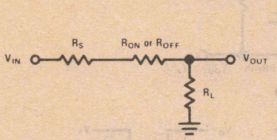

(6b) VOLTAGE DIVIDER EFFECT

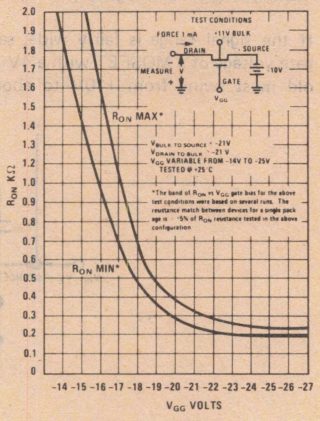

(6c) CHANGE IN R_{ON} WITH V_{GG}

FIGURE 6. MOS Commutator Switching Impedances

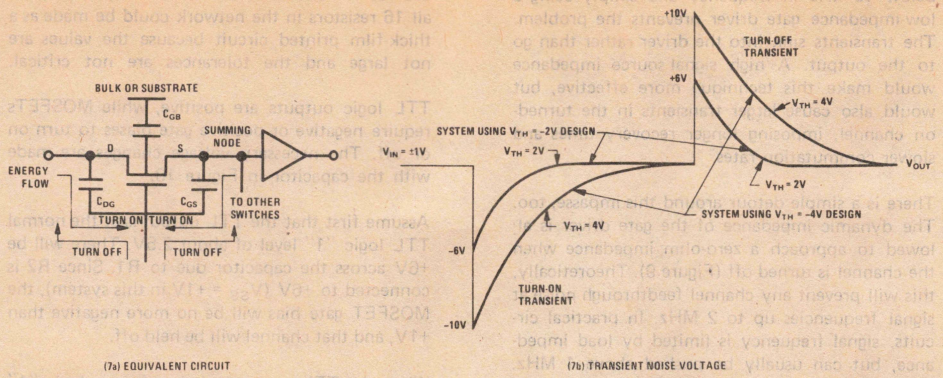

FIGURE 7. Transient Noise Generation

(another reason why the Figure 2 circuit is faster than the Figure 1 circuit).

The transients can be much larger than signal voltages, so even the relatively small transients of a low-V_{TH} MOSFET can saturate the buffer amplifier. One of the ways that designers of discrete commutators minimized transients at the summing node was to drive adjacent channels with coincident turn-on and turn-off signals. In this way, negative-going transients from the channels turning on will partially cancel out positive-going transients from the channels turning off. When the output amplifier is an integrator, the amounts of energy pulled through the summing node will be minimized by, in effect, being averaged out.

Coincident drive, discrete component circuits are fairly complex and expensive. Essentially the same effect is obtained in the Figure 2 commutator, at much less cost. The TTL decoder selects channels at such a high rate of speed that a channel is turning on while another channel is turning off. Transitions of the control voltage occur in less time than the turn-on and turn-off delays of the MOSFETs. So the transients are suppressed in a matter of nanoseconds. In fact, when the gate voltage is going negative or positive simultaneously, the transient is practically invisible at the output. That is, the transient actually helps change the output signal to the correct level more rapidly.

You might say that the high commutation rate makes the high commutation rate possible, but it is more pertinent to stress that the TTL decoder could not directly control a high-V_{TH} commutator. Low-impedance drivers are essential for high commutation rates, because they quickly source and sink transients. In this respect, TTL integrated circuits make almost ideal drivers.

In principle, the gate turning on and the gate turning off in a multichannel IC commutator are part of a closed-loop circuit charging the gate capacitance. The noise energy that does get into the summing node should be dissipated quickly to improve the data channel's recovery time. The energy is dissipated in the parallel combination of the summing node resistance and channel-source impedance. The RC time constant of the equivalent circuit in Figure 8 should be optimized to obtain the maximum commutation frequency.

$$F_{max} = [(R_S/R_{node})\,C_{node}]\,[(C_1 + C_2)/2C_{node}]\,[V_{G1} - V_{G0}] \text{ to } 1$$

This equation relates the time constants, gate and transient voltages and transient recovery tolerance. V_{G1} and V_{G0} are the turn-on and turn-off values of V_G; other terms are defined in Figure 8.

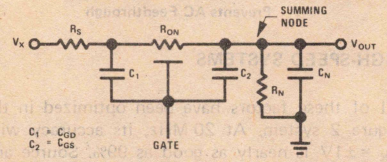

FIGURE 8. RC Network Governing Switching Frequency

HIGH-FREQUENCY NOISE CONTROL

In some cases, the analog input signal is AC rather than DC. That is, it may fluctuate rapidly between positive and negative values. This can vary the effective values of V_{SG}, R_{ON} and perhaps R_{OFF}, and may also cause spurious charging or discharging of the MOSFET capacitance. The condition results in output-voltage fluctuations due to the appearance at the summing node of signal voltages from a channel that is supposed to be off—a problem known as AC feedthrough or channel-feedthrough noise. The main cause is charge transfer through the gate-source and gate-drain capacitances of the turned-off MOSFETs.

Fortunately, most transducer voltage outputs are below 10 kHz in frequency and simply using a low-impedance gate driver prevents the problem. The transients sink into the driver rather than go to the output. A high signal source impedance would make this technique more effective, but would also cause larger transients in the turned-on channel, imposing longer recovery times and slower commutation rates.

There is a simple detour around this impasse, too. The dynamic impedance of the gate driver is allowed to approach a zero-ohm impedance when the channel is turned off (Figure 9). Theoretically, this will prevent any channel feedthrough noise at signal frequencies up to 2 MHz. In practical circuits, signal frequency is limited by load impedance, but can usually be pushed above 1 MHz. The driver impedance itself must also be low at high frequencies, of course.

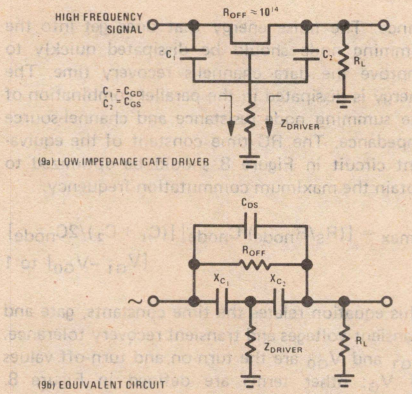

FIGURE 9. Zero-Impedance Driver Return Prevents AC Feedthrough

HIGH-SPEED SYSTEMS

All of these factors have been optimized in the Figure 2 system. At 20 MHz, its accuracy with $V_X = \pm 1V$ is nearly as good as 99%. Source and load impedance are made very low because R_{ON} is not greater than about 200 ohms per channel. The gate change is only 7V (from +1V to −6V), and the high-speed TTL control makes the transients coincide.

The 8-channel configuration shown can be the building block of very large solid-state commutators. Each 4-channel MOSFET switch is a monolithic chip (National Semiconductor MM451). The TTL channel selector is a decoder (DM7842) designed to convert 4-bit binary-coded-decimal inputs into decimal-number outputs. Only 8 outputs are needed here, so the decoder's fourth input is grounded.

The TTL outputs are translated to MOS control signals with an interface network consisting of identical passive circuits on each control line. An interface and its voltage levels are shown in Figure 10. The author used discrete components, but all 16 resistors in the network could be made as a thick-film printed circuit because the values are not large and the tolerances are not critical.

TTL logic outputs are positive, while MOSFETs require negative or positive gate biases to turn on or off. The necessary voltage changes are made with the capacitor in Figure 10.

Assume first that the TTL output is at the normal TTL logic "1" level of about 2.5V. There will be +6V across the capacitor due to R1. Since R2 is connected to +6V (V_{SS} = +1V in this system), the MOSFET gate bias will be no more negative than +1V, and that channel will be held off.

When the TTL output switches from a logic "1" to a logic "0" level, the voltage seen by the capacitor drops from +6 to about 0.4V. Bias on the gate will therefore drop from +1V to about −5V, turning the channel on. The commutator is controlled, then, by selecting the location of an "0" bit in the decoder output and making all other outputs "1".

R1 is connected to a voltage higher than +6V to assure that the TTL output rises rapidly during a transition from logic "0" to logic "1". This is needed for quick, clean turnoff of a channel (a similar technique of interfacing TTL and low-V_{TH} MOS digital circuits enables the MOS circuits to operate at about twice the normal MOS rate). The opposite transition, to the more negative level, is normally quite fast and is assisted by the excellent current-sinking capability of TTL.

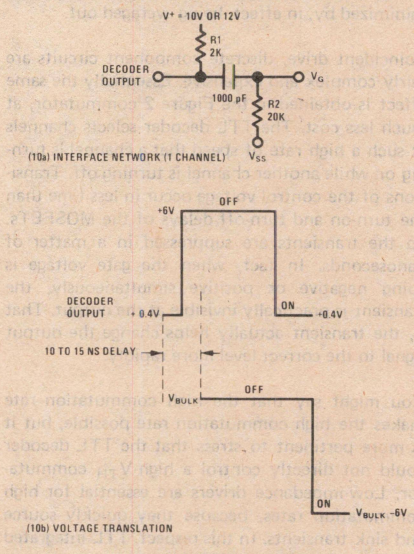

FIGURE 10. High-Speed TTL-to-MOS Control Interface

Care must be taken to select TTL drivers that do not break down when their outputs are pulled up to +10V or +12V. The DM7842 has a diode in the

output stage that protects the output transistor at high voltages, and other devices in the National TTL family have similar output stages. These are equivalent to Series 54 TTL. Suitable TTL control logic can be assembled from other ICs, but the DM7842 is convenient because only one driver chip is needed for every eight channels in the commutator system.

There is a delay of 10 to 15 nanoseconds between a transition in the TTL output and the switching of a channel on or off, mainly due to the RC time constant of the RC interface. However, the delay occurs equally on all channels and does not affect the commutation rate or significantly reduce the 50 ns sampling time permitted by a 20 MHz rate. Commutator output can be kept synchronized to any following data processing subsystem by putting a comparable delay in the line from the system clock to the processor.

The MM451 chip is also available with a DTL monolithic driver in a flatpack. This hybrid IC, the MH453, does not require an external interface network. It will operate at frequencies to 500 kHz and switch analog signals of ±10V under direct control of TTL or DTL logic. The four MOSFETs of the MM451 are connected in a dual differential configuration, useful for combining and comparing signal voltages.

ALL-MOS COMMUTATORS

Commutators built entirely of MOS devices need not be limited to low-frequency operation, despite their larger voltage swings and transients. The system in Figure 2 has better than 99% accuracy at 1 MHz with $V_X = \pm 10V$ when the previously discussed characteristics of low-V_{TH} devices in this signal range are optimized.

Similar systems, optimized for smaller signal-voltage ranges, have not been built by the author but it is reasonable to expect higher frequencies or accuracies in such systems. Accuracy, of course, would be further improved by operating the optimized designs at lower than their maximum frequency. Longer recovery times would be permitted.

Each of the MM454 4-channel commutators contains four MOSFETs like those in the MM451 and, in the same chip, a 2-bit MOS counter and decoder for channel selection and all-channel blanking (Figure 11).

As shown, the system samples the 16 channels sequentially, much like a rotary driven mechanical commutator. The MM454 is designed as a building block for large sequential sampling systems. However, any particular channel could be selected with external output-gating logic. If random channel selection were the normal operating mode, the MM451 and external selection logic can be used. Two ranks of commutators, similar to Figure 1, simplify the control logic. For example, one gate driver would turn on channels A1, B1, C1 and D1, and a second driver would select channel A1 by turning on channel E1—which takes a lot less control circuitry than selecting 1 out of 16 channels directly and requires only one more monolithic commutator.

Either way, a very critical system design requirement is to guarantee that only the selected channel conducts during the sampling interval. The single 3-input NOR gate in Figure 1 accomplishes that. Commutator C is used as the master element. It divides down the 1 MHz clock signal through a 4:1 countdown circuit, which is provided in the MM454 to facilitate submultiplexing. Commutator E's four channels therefore sequence at a 250 kHz rate. Meanwhile, the four channels in commutators A, B, C and D are each sequencing at 1 MHz. The analog sequences through A1, A2, A3 and A4 in order when E1 is on, B1 through B4 when E2 is on, and so forth.

The 4:1 count-down output of commutator E (1/16 MHz) is fed back through the NOR gate to the reset inputs of commutators A, B and D. The reset every cycle keeps them in step with commu-

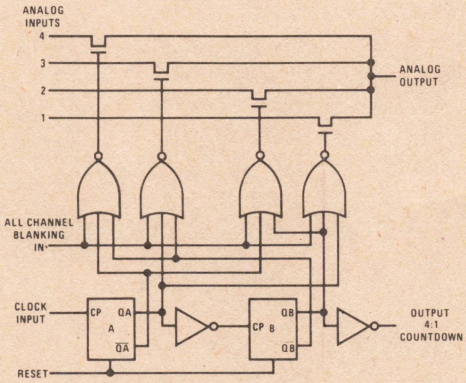

FIGURE 11. MM454 Four-Channel MOS Submultiplexer

tator C and therefore commutator E. The NOR gate's output also can be used to maintain synchronization of the commutator with other signal processing systems.

ANALOG/DIGITAL SYSTEMS

Techniques developed, and being developed, to directly couple bipolar and large-scale MOS digital circuits also depend heavily upon the lowering of threshold voltages. A report compiling and detailing coupling techniques is in preparation. In general, the ability of the MOS digital circuit to accept small, positive transitions in signal voltage, and to operate with smaller differentials in bias and gate voltages are the critical requirements for direct coupling.

Directly coupling MOS digital outputs to bipolar logic also enhances operating speed, again because impedances are lowered. Some of the high-speed TTL/MOS hybrid systems that have been developed are similar in principle to commutators, except that V_X is digital data and scores of MOSFET switching stages are used in each MOS chip. One data-storage system built by the author has achieved data transfer rates up to 16 MHz, by multiplexing high-speed bipolar data into parallel MOS storage circuits.

With all three classes of bipolar/MOS interfaces—analog/digital, logic/logic and logic/analog—now available, system designs can exploit more fully the many speed/cost tradeoffs offered by hybrid bipolar/MOS systems. Bipolar control logic and MOS large-scale storage is an extremely efficient, minimum cost combination suitable for medium-to-high-speed systems.

In other words, low-threshold processing has enabled MOS to move out of the low-frequency range and into the ranges where most modern analog/digital systems operate.

Analog-Signal Commutation

National Semiconductor
Application Note 33
Donald L. Wollesen
February 1970

INTRODUCTION

Telemetry and other data-acquisition systems have become very compact and efficient, particularly when built with integrated circuits. To keep in step, small, low-power commutators are needed to multiplex large numbers of analog signals. Metal-oxide-semiconductor field-effect transistors do the job well.

MOS IC's containing several MOSFET switching channels are presently available in production quantities and perform excellently as low-level analog commutators if the system designer understands their limitations and exploits their advantages. This report will describe the DC characteristics involved in switching analog signals when the signal input range varies between −10V and +10V.

MOSFET's size up very well against earlier switching devices when their overall characteristics are considered (see Table 1 and the discussion of competitive devices). In addition to being fabricated easily as multichannel IC's—in some cases, complete with switching-control circuitry on the chip—MOSFET's have several significant electrical advantages:

- Power dissipation is essentially zero in most applications. No DC power is consumed in the control gate, and practically no signal power is dissipated in the switch.
- Offset voltage is zero in a well-designed switch.
- Resistance is reasonably low when the channel is conducting.
- Resistance of an OFF channel is practically open-circuit (R_{OFF} is on the order of 10^{12} ohms and leakage currents are very small, about 100 pA).
- Analog signals are well isolated from the switch-control signals.

With all of these things in their favor, MOS analog-switching IC's will come into much wider use, especially in large, multichannel instrumentation and data-transmission systems.

	Mechanical Switch	Bipolar Transistor	Photocell	N Junction FET	P MOS FET
"On" Resistance	$10^{-2}\Omega$	10Ω	$1\ K\Omega$	30Ω	100Ω
"Off" Leakage	10 pA	100 pA	10 nA	100 pA	100 pA
Offset Voltage	0	10^{-2}V	0	0	0
Commutation Rate	1 KHz	100 KHz	100 Hz	10 MHz	50 MHz

Table 1
Comparison of Switches

MOS IC STRUCTURE

MOS IC's generally provide four or more channels in a monolithic chip, but two are enough to illustrate the basic construction that governs switch operation. The cutaway view of Figure 1 shows two complete MOSFET's, one of which may be on while the other is off. Figure 2 is the schematic.

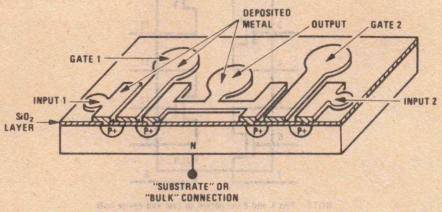

FIGURE 1. Cross-section of Two MOSFET's in an Integrated Circuit.

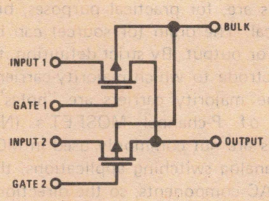

FIGURE 2. Schematic Diagram of Two-Channel Analog Switch.

Both MOSFET's have a common substrate, the "bulk" consisting of lightly doped N type silicon. Thermally grown silicon oxide covers the entire chip surface, except where the oxide was etched away to allow ohmic connections of input and output electrodes to stripes diffused with P+ dopants. These stripes are the MOSFET drain and source regions. Each gate is defined by the gate electrode, which lies over a channel region and is isolated from it by the oxide (hence, MOSFET's are sometimes called insulated-gate FET's or IGFET's).

All electrodes are etched from a thin film of deposited aluminum. Each MOSFET has separate input and gate electrodes, but the output electrodes may be paired as shown, connected to a common output pin, or connected to separate output pins on the package. The same basic MOSFET

structure can be used, whether the circuit is a differential switch, a multiplexer, or independent switches in a single package (see Figure 3).

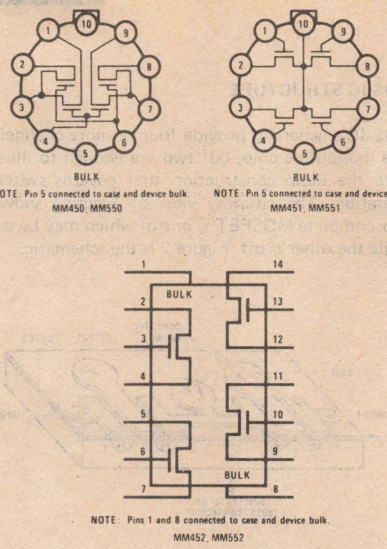

FIGURE 3. Connection Diagrams of Dual Differential Switch, Four-Channel Switch and Quad MOS Transistor.

MOSFET's are, for practical purposes, bilaterally symmetrical. The drain (or source) can be either the input or output. By strict definition, the drain is the electrode to which majority-carrier current flows. The majority carriers are "holes" in the channel of P-channel MOSFET's (N-channel MOSFET's are not commonly used in MOS IC's). In most analog switching applications, the signal contains AC components, so the direction of current flow frequently alternates.

SWITCHING AND ISOLATION

A P-channel MOSFET turns on when negative voltage is applied between gate and source. The gate is biased negative with respect to the bulk. Electrons accumulate on the gate, creating positive charges in the channel region. This inverts the electric charge thus creating an "enhanced" P type channel in the n-type semiconductor. When the gate is several volts more negative than threshold, a conducting channel is formed, allowing majority carrier current (holes) to flow freely between source and drain. The channel is said to be "enhanced," so these MOSFET's are called P-channel enhancement MOSFET's.

Operating voltages in a typical switching channel are illustrated in Figure 4. In most schematics, the bulk connection would not be shown.

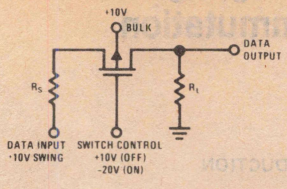

FIGURE 4. Biases on Single MOS Channel at Maximum Signal Range of ±10V.

The applied biases are those that would be used at an analog signal range of ±10V. At any signal range, the following guidelines apply:

1. Bulk bias V_{BB} must equal or be more positive than the most positive excursion of the analog signal. This bias must be maintained at all times, so is taken from a DC supply.
2. To turn the switch ON and make R_{ON} low, the voltage applied to the gate should be *at least* 5V more negative than the most negative excursion of the analog signal (10V is desirable). The actual gate voltage is V_{GG} and the gate bias is $-V_{GB}$.
3. To ensure that the switch turns OFF fully, V_{GG} should be as positive as V_{BB} making $V_{GB} = 0$.

The first rule must be followed to get good performance from the switch. With V_{BB} most positive, the p-n junctions are kept reverse-biased. When the channel is OFF, this condition isolates the drain from the source. When the switch is turned ON and the P-channel is enhanced, the drain-channel-source region is isolated by the p-n junction from the substrate because the substrate is "reverse biased" from all of these regions at all times.

The voltage across the switch, from drain to source, is caused by IR drop whether the switch is on or off. The MOS analog switch does not have any inherent offset voltage. To get $V_{out} = V_{in}$ in a MOSFET switch merely requires that load resistance R_L be much larger than the resistance in the conducting channel, R_{ON}. Since R_L is generally about 100 kilohms in most high-accuracy analog commutator applications, the requirement is easily met.

Figure 5 helps clarify rules (2) and (3). This curve shows how the gate-source threshold voltage changes with bulk-source bias voltage. Channel resistance is high and current flow at the output can only be a few microamperes. A forward bias higher than threshold is needed to enhance the channel. Making gate bias much more negative than V_{TH} at turn-ON does this. Then, at turn-OFF, the gate bias becomes more positive than V_{TH} when $V_{GG} = V_{BB}$. The channel must revert to N-type silicon thus preventing majority carrier current flow.

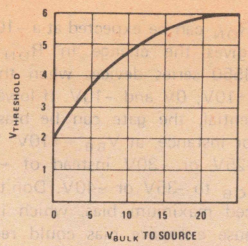

FIGURE 5. Variation in Switching-Threshold Voltage with Changes in Bulk-to-Source Bias Voltage.

The circuit designer must use biases that prevent the drain from having a positive potential when the switch is OFF. For example, $V_{in} = +10V$ and $V_{BB} = +9V$ should not be allowed. Operating with $V_{DS} = +1V$ won't harm the MOSFET, but some of the signal will appear at the output. Effects of improper biasing can be seen in Figure 6. With the source and bulk grounded while V_{DS} varies, output currents at different gate biases are measured to produce the "drain family of curves." The normal family looks like Figure 6b (the drain family of National Semiconductor's MM450/MM550 MOS switching IC's). The "bipolar" family in Figure 6c shows what happens when V_{DS} is allowed to go positive.

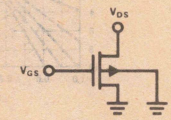

6a

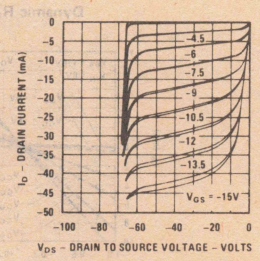

6b

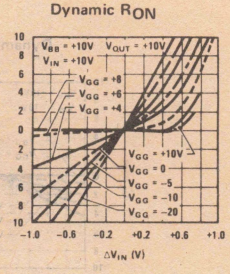

6c

FIGURE 6. Drain-Current Measuring Circuit, Normal Drain Family of Curves, and "Bipolar" Drain Family of Curves.

During small excursions of V_{DS}, the MOSFET acts as a voltage-variable resistor. But when V_{DS} rises to about +0.6V, there is an abrupt increase in drain current. At this point, the diode drop is exceeded and the drain-bulk junction becomes forward biased. Minority carriers are injected into the n-type channel region, causing grounded-base pnp bipolar transistor action (note in Figure 1 that a MOSFET resembles a lateral pnp transistor in the OFF condition). Output current will be α times the input current. In most MOS devices, the amplification factor will be 0.5 to 0.9.

It is absolutely mandatory that the $V_{DS} \geq +0.6V$ be avoided. Otherwise the effective R_{OFF} will be poor and the channel will seem to have abnormally high leakage current.

Only the upper right corner of the graph in Figure 6b, detailed in the third quadrant of Figure 6c, is useful in practical circuit designs. The useful characteristics are to the right of $-V_{DS} = -1$ and above a load line at about $I_D = 0.5$ mA.

ON AND OFF RESISTANCE

Both R_{ON} and R_{OFF} normally vary with signal voltage and operating temperature. A positive signal voltage improves channel enhancement by making the gate more negative with respect to drain and source.

R_{ON} is minimum at the most positive signal level. It will increase slowly with temperature, since high temperatures reduce the mobility of majority carriers. Neverthless, R_{ON} will have little effect on signal quality if R_L is much larger. R_{ON} does vary nonlinearly, though, so we investigated its effect upon signal quality. Figure 7 proves that the effect is negligible provided that the biasing rules are observed.

Total Harmonic Distortion vs V_{DS}

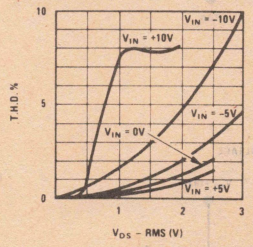

FIGURE 7. Small-Signal Harmonic Distortion (Measured with Only About 100 Ohms Load Resistance).

The curves of small-signal harmonic distortion in Figure 7 were measured with practically no load resistance. AC signals at various voltages were

applied to the MOSFET input and the current flow was measured at the output with the help of a 100-ohm current-sensing resistor. Distortion levels less than 0.1% could not be measured with available instruments. The anomaly in the +10V curve is due to diode distortion of the type illustrated in Figure 6c. The input signal's AC plus DC components exceeded the bulk voltage, V_{BB} = +10V, by more than the +0.6V diode drop.

The harmonic distortion is amply low for practical applications. With a 1-kilohm load, the small-signal distortion typically would be less than 0.5%, with V_{in} = ±10V and V_{DS} almost ±1V. A load of 1 kilohm is unusually small. Small signal distortion would be almost unmeasurable with a 10-kilohm load. When signal accuracy must be very high, 100 kilohms are used by some designers.

Worst-case R_{ON} can be expected at a −10V input. Figure 8 gives the change in R_{ON} of the MM450/MM550 series devices when the analog input is at +10V, 0V and −10V. If lower impedance is essential, the gate can be biased more negative. For instance, at V_{BB} = +10V, V_{GG} can be made −25V or −30V instead of −20V, increasing $-V_{GB}$ to −35V or −40V. Don't go over the specificed maximum bias, which is usually −45V, because excessive bias could reduce the device operating life.

Conversely, all biases can be reduced if the signal voltage range is less than ±10V. The gate-drive circuit will not have to swing as far, the switch can be operated faster, and switching transients will be smaller. Or, the bulk bias can be reduced and the gate bias maintained at the previous ON level. This

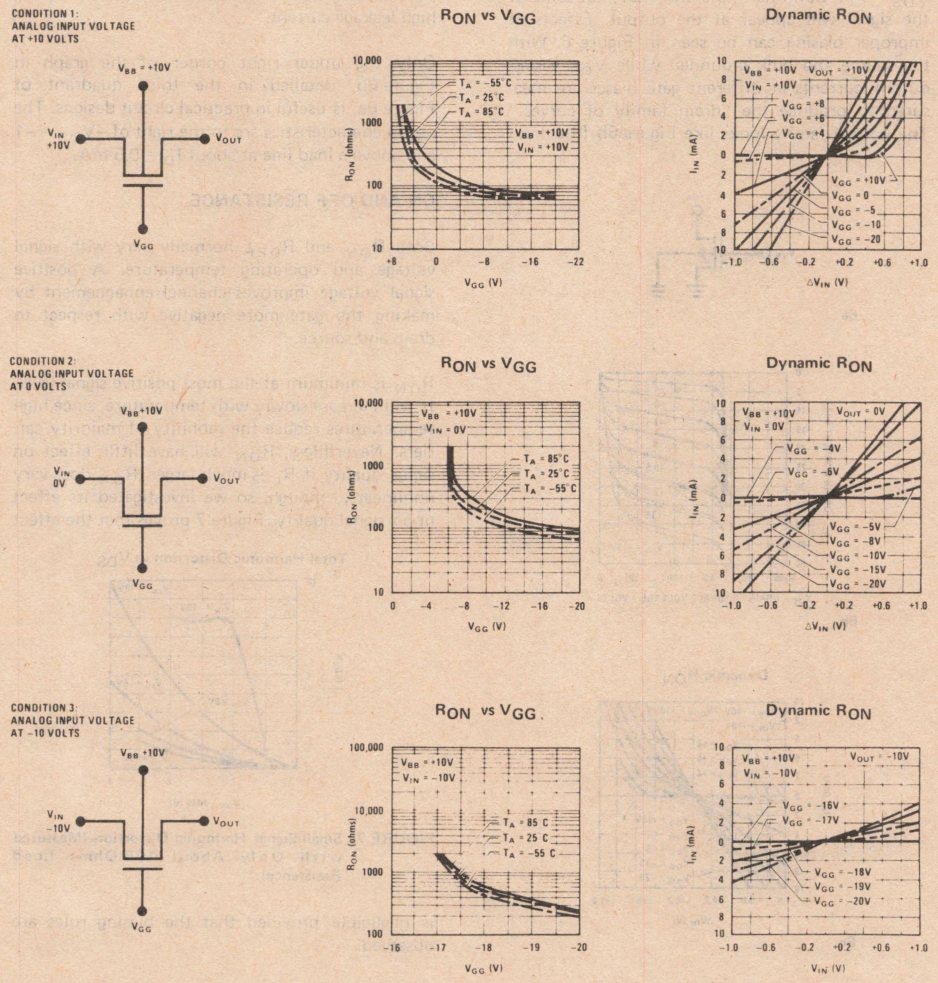

FIGURE 8. Typical R_{ON} Characteristics of MM450/MM550 MOS Devices at Most Positive, Zero and Most Negative Signal Voltages.

will give the effect shown in Figure 9—an improvement in channel enhancement and reductions in R_{ON} at the various signal levels.

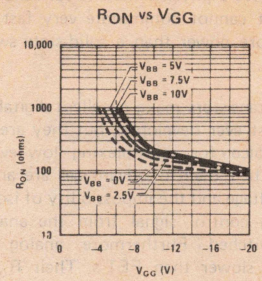

FIGURE 9. Bulk Bias Effect on R_{ON}.

When the gate is turned OFF, impedance between source and drain becomes very high ($R_{OFF} \approx 10^{12}$ ohms). A MOSFET's only significant DC conduction is leakage current. Total leakage in MM450/MM550 devices is typically less than 100 pA at 25°C. It rises more rapidly than R_{ON} with increasing temperature, approximately doubling with every 10°C rise in temperature. However, the MM450 devices are low-leakage types that are specified for use to 125°C. At the maximum temperature, leakage will usually be less than 100 nA. (At very high signal frequencies, another conduction mechanism may occur—analog signal feedthrough in the device capacitances, which can be prevented by making the gate-driver impedance low when the switch is OFF.)

The two significant forms of DC leakage are leakage from source and drain to bulk, and leakage through the channel from input to output. When all channels in the multiplexer are OFF, and the outputs of each MOSFET are connected to a common package pin, total leakage will be the sum of the bulk and channel leakages.

Worst-case leakage is measured with the circuit in Figure 10. The pin at which the leakage current is measured is biased to −25V and all other pins are grounded. This is equivalent to the bulk being biased at +10V, all gates at +10V, and all analog-signal inputs at +10V, with the output at −15V.

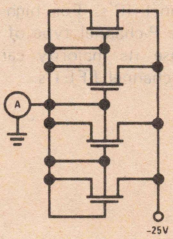

FIGURE 10. Worst-Case Leakage Test Circuit and Typical Worst-Case Total Leakage of MM451 at 25°C.

Channel leakage is measured with the test circuit in Figure 11a. At V_{in} = +10V, the leakage at the output is at its maximum positive value. As V_{in} goes more negative than +10V, channel leakage decreases, goes through zero, and becomes negative, as in Figure 11b.

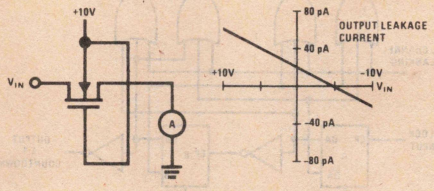

11a 11b

FIGURE 11. Channel-Leakage Test Circuit and Variation in Leakage with Signal Voltage.

The designer of switching systems that require very high R_{OFF} values under all signal conditions should anticipate the possibility of worst-case leakage. But average leakage will generally be considerably less than worst case. First, leakage currents in each switch are voltage-sensitive, and will be less than maximum at signal voltages less than +10V. Secondly, when the analog signals on some channels are positive and those on other channels are negative, the negative currents will subtract from the positive currents, further reducing the total leakage at the output. Also, when a switch is ON, it would not be contributing to the leakage. Assuming signal voltages vary randomly between +10 and −10V, total leakage will run about half that of worst case. Of course, leakage will be still less if the analog signal limits are less than ±10V.

CONCLUSION

Integrated MOSFET switching circuits make excellent low-level analog commutators. Power dissipation is essentially zero, capacitance is reasonably low (typically 8 pF at the analog input), the R_{OFF}/R_{ON} ratio is high, and the control signal is isolated from the input. MOS IC's with four or more switching channels are readily available in production quantities.

Conventional bipolar drive circuitry can control channel switching at rates in the megahertz range. Hybrid integrated circuits containing monolithic MOS multiplexers and bipolar drivers are being manufactured for medium-speed applications (NH0014 and NH0019). Level-changing circuits in these devices allow external TTL or DTL IC's to control the commutator at analog signal levels to ±10V. MOS commutator systems can be built with building-block circuits such as the MM454F in Figure 12. This monolithic IC can commutate at rates to 1 MHz, depending on the range of signal voltages. The control logic on the chip includes a clock-countdown chain that facilitates submultiplexing.

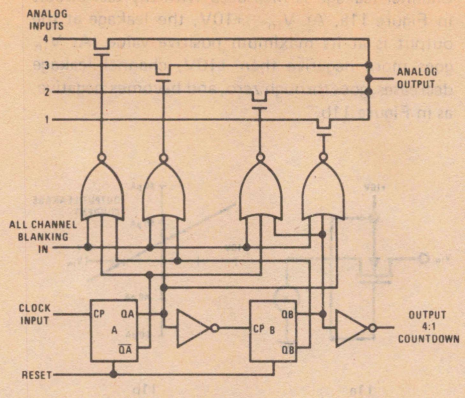

FIGURE 12. Logic Diagram of MM454F Four-Channel MOS Multiplexer. Switches and Control Circuitry Are Fabricated in the Same Monolithic Chip.

MOSFET switches are generally used to commutate low-frequency analog signals. Today, the preferred device for RF-signal multiplexing is the N-channel junction FET, which can handle signal frequencies in the VHF range. MOS IC's have operated successfully, however, in some RF application. The high-frequency capabilities of MOS IC's are being investigated by the author and will be the subject of a future report.

Although the most outstanding feature of MOSFET's is the ease with which they can be fabricated as multichannel monolithic IC's, their electrical characteristics compare quite favorably with those of other switching components. An "order of magnitude" comparison of MOSFET's and other devices that could be used for low-level analog switching is given by Table 1. Better characteristics might be obtained in each case, but these values are typical.

Each type of analog switch has advantages and limitations that must be considered for practical use. No switch is perfect. If a switch were perfect, it would have zero resistance when ON, infinite resistance when OFF, and be 100% efficient—that is, it would consume no power.

Electrically, the mechanical switch comes close to this ideal. It has the highest R_{OFF}/R_{ON} ratio and totally isolates the analog signal from the switching-control function. However, it has mechanical drawbacks that make it noisy and unsuitable for low-level commutation: contact bounce, contact pitting, susceptibility to vibration, and the necessity to move a physical mass to turn the switch on or off. It cannot commutate very fast and consumes more power than a solid-state switch, as a rule.

Bipolar transistors make excellent digital switches, the fastest ever developed, but they are usually a poor choice for multiplexing low-level analog signals. Their main disadvantages are an inherent offset voltage and the impossibility of isolating the switching control signal from the analog signal being switched. Furthermore, analog switching rates are slower than FET's. Their R_{on} is low, though—typically 10 ohms in analog switches (versus milliohms in power transistors). Bipolar transistors fare much better in high-level switching, where DC offset is not a problem.

Photocells make fairly good analog switches. Because light is used as the control signal, the control is completely isolated from the analog electrical signal. However, R_{ON} is high and the R_{OFF}/R_{ON} ratio is relatively poor. Even at moderate R_{OFF}/R_{ON} ratios, photocells cannot commutate much faster than 100 Hz. After exposure to intense light, a photocell made with a semiconductor such as cadmium sulfide or cadmium selenide exhibits a long turn-off decay time. Photocell turn-off time constants may stretch out for many seconds before R_{OFF} reaches an acceptable level. Faster switches can be made with combinations of electroluminescent diodes and phototransistors, but these devices are still very expensive.

Some N-channel junction FET's come close to being ideal switches. Offset voltage is zero, and the admittance-to-input capacitance ratio Y_{fs}/C_{iss} is the highest of any contemporary device. These two parameters govern commutation rate, which can be very high if the impedances of the signal source and the load are made very low. Theoretically, the high majority-carrier mobility in an N-channel J-FET enables it to operate at a frequency higher than any other type of FET. A good example is the 2N4391: R_{OFF}/R_{ON} is about 10^9, $R_{ds\ (on)}$ is a maximum of 30 ohms, and maximum leakage at 25°C is 100 pA. The one major disadvantage of N-channel J-FET's is that they are extremely difficult to make in the form of multichannel IC's. For high-frequency commutation, the P-channel type of J-FET is a poor choice because its majority carrier mobility is lower than N channel J-FET's.

Applications of MOS Analog Switches

National Semiconductor
Application Note 38
R. Stump, D. Wollesen
May 1970

ABSTRACT

This discussion begins with some basic commutation circuits, then describes some uses in linear amplifier applications such as reset functions and chopper applications. The use of MOS switches as a suppressed carrier double-sideband modulator and a double-sideband demodulator is then covered; followed by a circuit proposal for a phase-locked loop AM-FM detector without tuned circuits.

THE MOS DIFFERENTIAL SWITCH—DC TO RF

The dual differential switch is a particular switch connection scheme which at first glance prompts one to say—so what? It is, however, one of those simple circuit configurations which can find a wide variety of uses in electronic circuits. The dual differential switch could also be called a DPDT switch or two SPDT switches—depending on how they are toggled.

MOS switches have some unique features which make them very useful for data switching[1,2,3]: no offset voltage, high R_{OFF}/R_{ON} ratios, low leakage, fast operation, and matched "on" resistance. Within definite bounds, MOS switches exhibit good isolation between the switching drive and signal path.

MOS switches do have somewhat unique driving requirements. In order to solve this problem, National manufactures a hybrid integrated circuit which provides DTL-TTL drive compatibility with the dual differential switch. These devices use the DM7801 chip with an MM450 chip for the AH0014 and the DM7800 chip with an MM450 chip for the AH0019. The AH0014 is basically a DPDT switch while the AH0019 is two SPDT switches in the same package. Each connection has its particular advantages and disadvantages.

COMMUTATION CIRCUITS

The AH0014 may be used as a two channel commutator only, because two of its four channels are always on. The AH0019 may be used for systems with any number of channels since it can shut all channels off on command.

Figure 3 shows a six channel commutator which may be easily expanded. Data sampling may be done on any format which the user chooses. Sampling format is easily controlled by DTL or TTL logic design independent of the AH0019 Since each buffer-driver of the AH0019 has a dual input gate, all channel blanking is readily achieved. If desired, the format shown in Figure 3 may be

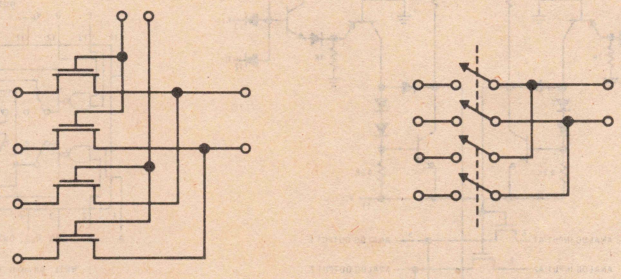

(a) MOS Configuration (b) Schematic Configuration

FIGURE 1. MM450/MM550 MOS Dual Differential Switch

modified so as to use the AH0019 logic inputs as binary gates which can reduce the command logic complexity if the blanking function is not required.

Since the multiplexed information is in differential form, common mode noise is greatly reduced. Also, the MOS gate drive spiking is drastically reduced because of the differential channel configuration. Demultiplexing may be accomplished by using a circuit identical to the multiplexer because the MOS device is a true bilateral switch. In hard-wired systems where the multiplex "outputs" are electrically connected as in Figure 4, the signal may be transmitted in either direction. For non-hardwired systems, the modulation-demodulation sequence is still bilateral, but provisions must be made for transmit/receive function control.

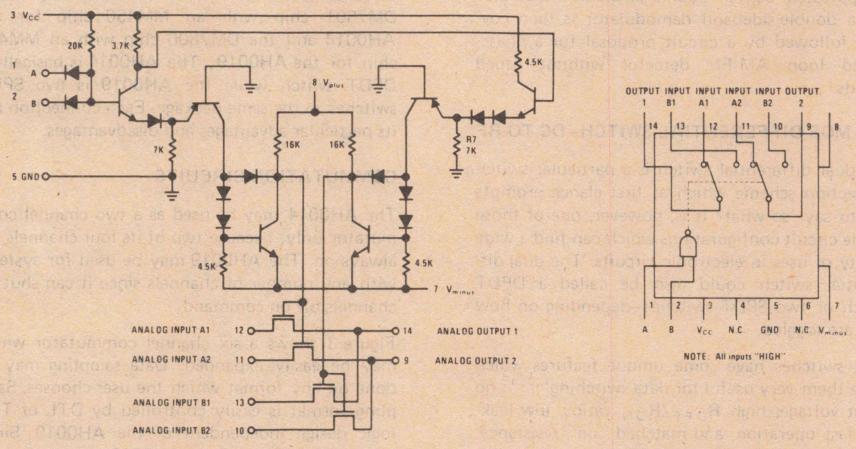

(a) AH0014

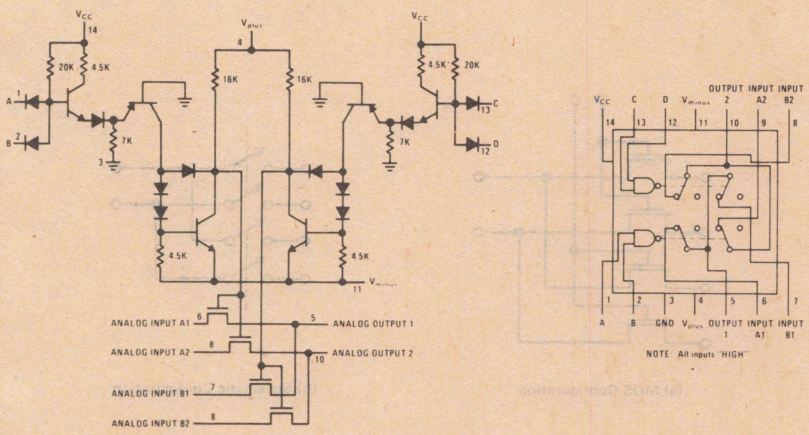

(b) AH0019

Figure 2. AH0014 and AH0019 DTL-TTL Compatible MOS Analog switches

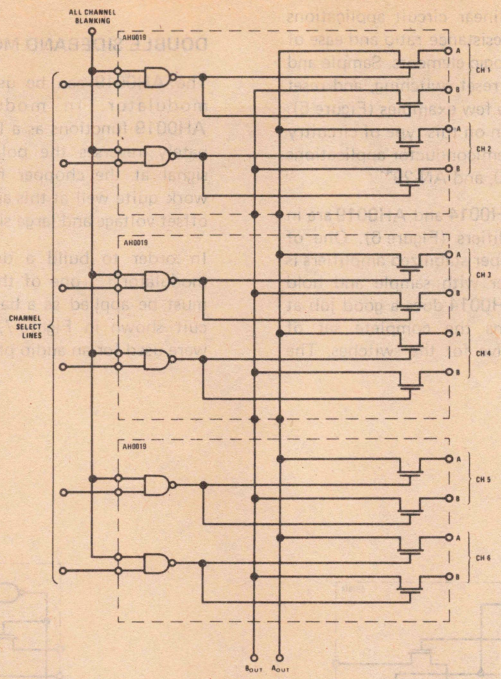

Figure 3. Differential Signal Commutator– AH0019

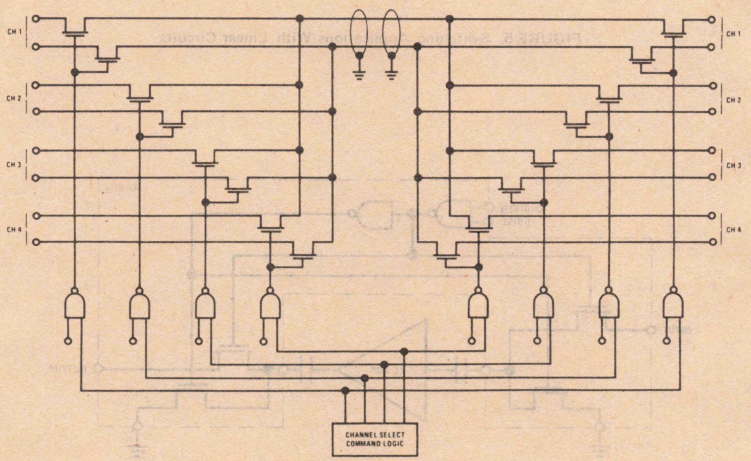

FIGURE 4. Commutation-Modulation and Demodulation

USAGE IN LINEAR AMPLIFIER CIRCUITS

The AH0014 and AH0019 devices are useful for switching functions in linear circuit applications because of high off/on resistance ratio and ease of switching control using logic elements. Sample and hold circuits, integrator reset switching, and reset stabilized amplifiers are a few examples (Figure 5). More detailed information on this type of circuitry is available in National Semiconductor applications notes AN-4, AN-5, AN-20, and AN-29[4-7]

An obvious use of the AH0014 and AH0019 are in chopper stabilized amplifiers (Figure 6). One of the better forms of chopper stabilized amplifiers is the series shunt chopper with sample and hold type of output. The AH0014 does a good job at this because it contains the complete set of switches plus proper drive for the switches. The AH0014 can greatly reduce component count for chopper stabilized amplifiers.

DOUBLE SIDEBAND MODULATOR

The AH0019 can be used as a double sideband modulator. In modulator applications, the AH0019 functions as a DPDT switch which alternately reverses the polarity of the modulating signal at the chopper frequency. MOS switches work quite well at this application because of zero offset voltage and large signal handling ability.

In order to build a double sideband balanced modulator[8,9], one of the two modulating inputs must be applied as a balanced input. For the circuit shown in Figure 7, an LM102 and LM107 were used for an audio phase splitter.

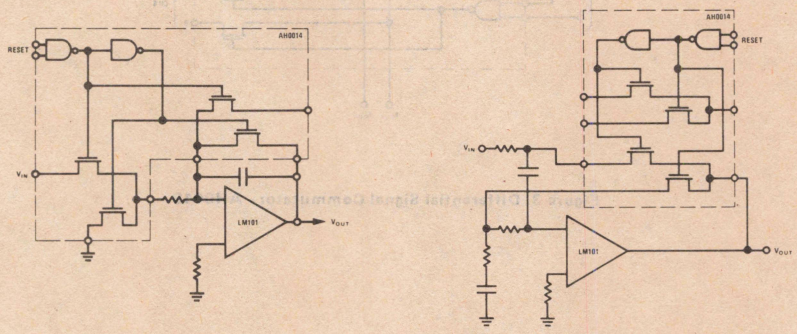

(a) Integrator

(b) Reset Stabilized Amplifier

FIGURE 5. Switching Applications With Linear Circuits

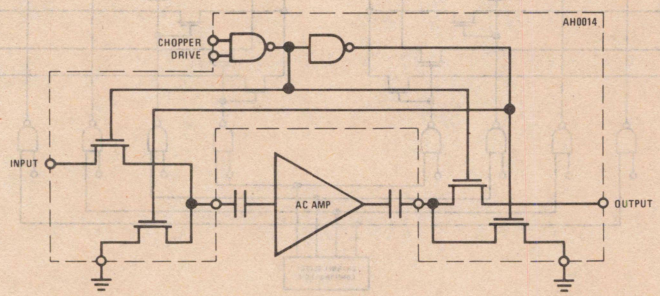

FIGURE 6. Series-Shunt Chopper Stabilized Amplifier

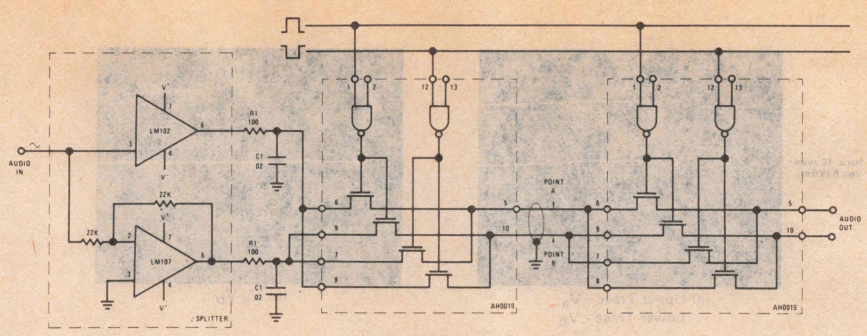

FIGURE 7. Double Sideband Modulator-Demodulator

Both point A and point B in Figure 7 are DSB modulated outputs; so, technically, you could get by with only one. The waveform at point A is illustrated in Figure 8a for a carrier frequency of 100 kHz and an audio frequency of 12.5 kHz. Point B is equal and out of phase.

One type of spurious response encountered with MOS switching devices is output spikes caused by a charge being dumped into the channel by the gate drive through gate-channel capacitance. By adding C1, part of the charge can be absorbed, thus reducing the voltage amplitude of the spikes. The R1C1 combination has its 3 dB point at about 80 kc, so output from the phase splitter was not attenuated in the audio range.

The astute observer will notice switching transients on the waveform in Figure 8a. By taking the output in differential form at points A and B, these transients are greatly reduced because the desired signals are equal but of opposite polarity, while the switching transients are an "in phase" or "common mode" error.

To better illustrate the improvement by using a balanced output, the audio signal was reduced to zero volts and the points A, B, and A-B were measured as shown in Figure 9. The improvement operating in the differential mode is obvious.

The circuit drive requirements for Figure 7 may be simplified by using the **AH0014** since it provides an inverting function internally. Only one phase of toggle drive to the **AH0014** is required.

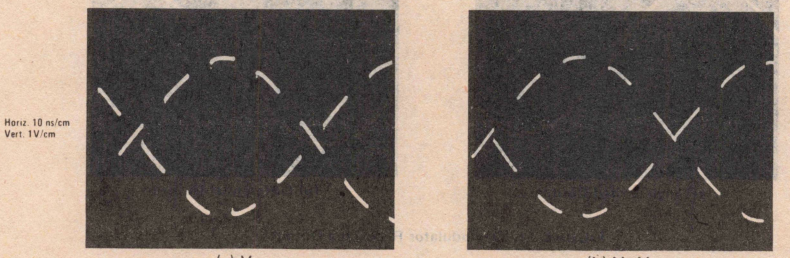

(a) V_a (b) V_a-V_b

FIGURE 8. Double Sideband Signal

The modulation will be distorted more due to the phase lag created by the internal inverter of the **AH0014** Figure 10a shows the switching performance of the **AH0019** while Figure 10b shows the switching performance of the **AH0014** In applications which do not require high carrier frequencies, the **AH0014** is adequate, but for carrier frequencies above 100 kHz, the **AH0019** provides improved performance because of its symmetrical switching behavior.

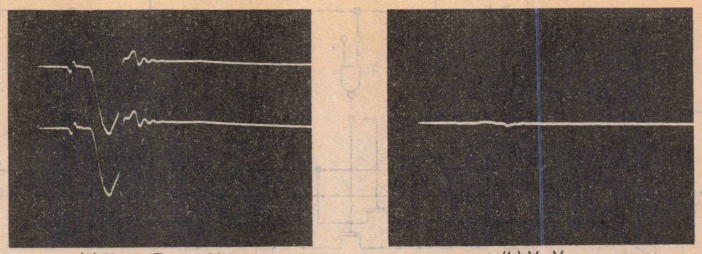

(a) Upper Trace - V_a
Lower Trace - V_b

(b) V_a-V_b

FIGURE 9. MOS Switching Transients

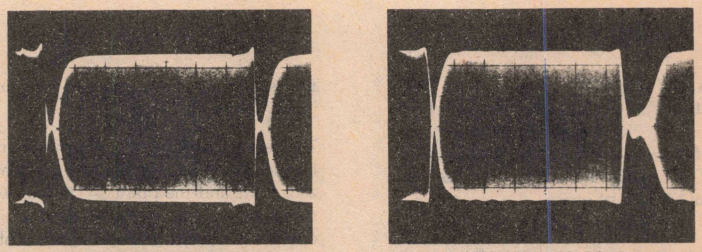

(a) NH0019 50 ns/cm

(b) NH0014 50 ns/cm

FIGURE 10. Channel Switching– AH0019 vs AH0014

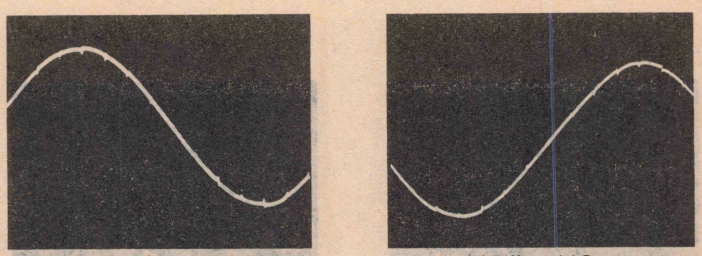

(a) Single Ended Output

(b) Differential Output

FIGURE 11. Demodulator Recovered Output

DOUBLE SIDEBAND DEMODULATOR

The major requirement of double sideband signal demodulation is proper carrier reinsertion. For maximum output, the carrier must be reinserted exactly in phase or exactly 180° out of phase with respect to the signal. Any departure from this optimum phase relationship will reduce the recovered signal amplitude. By applying the double sideband signal to a second AH0019 as shown in Figure 7, the original modulating waveform may be recovered, along with some switching transients (Figure 11).

These switching transients may be filtered out quite easily. It is, however, instructive to compare the recovered audio signal with the original. The modulating signal had less than 0.1% distortion at 1 kHz. Figure 12 shows the distortion of the recovered signal vs. signal amplitude.

Carrier frequency was 100 Hz for the upper curve and 10 kHz for the lower. These curves indicate that most of the distortion is due to switching transients, especially at low modulation levels. Output filtering will significantly reduce the recovered signal distortion.

Figure 13 emphasizes the affect that switching transients have on harmonic distortion. At carrier frequencies below 10 kHz, the RMS value of the transients is reduced to a point where distortion of the MOS switches themselves can be seen.

The AH0014 and AH0019 data sheet suggests a V plus supply value of 10 volts and a V minus supply value of −20 volts. However, switching transients may be reduced by using different power supply voltages. Figure 14 and Figure 15 show what happens to harmonic distortion caused by spiking versus power supply level. Figure 14 is plotted for V minus with V plus at 10 volts. Figure 15 shows what happens as V plus is varied. All of the previous data was taken at V plus at 14 volts and V minus at −12 volts.

AM-FM DEMODULATOR

Although an AM-FM demodulator was not physically constructed, the previously discussed "double sideband demodulator" performance implies that a very interesting phase detector can be built. The interesting features of this type of a detector are large dynamic range, recovery of both in-phase (amplitude modulated) and quadrature-phase (frequency modulated) signals plus the feasibility of not using any inductors for tuning.

Figure 16 shows the proposed circuit block diagram which uses a phase-locked loop for phase reference signal. The voltage controlled oscillator (VCO) is operated at 4 f_o. Flip Flop #1 provides a two phase output which is fed into FF #2 and FF #3. The outputs of FF #2 and FF #3 are exactly 90° out of phase regardless of the frequency of the VCO. This kind of performance is awfully hard to achieve using tuned circuits. For a 455 kHz detector, the VCO would operate at 1820 kHz. TTL flip flops will operate quite nicely at that frequency and should hold phase shift errors to practically zero. The LM107 provides DC gain to close the phase-locked loop, it forces the VCO to a frequency and phase angle which causes the "FM out" port to zero volts DC; this port is then operating exactly in quadrature with the applied signal. This part of the detector is then insensitive to amplitude modulation and sensitive to frequency modulation. Since the AM detector portion is operating exactly 90° out of phase with the FM portion, its output is insensitive to FM and sensitive to AM.

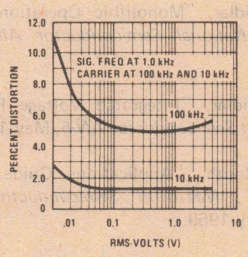

FIGURE 12. Recovered Signal Harmonic Distortion vs Audio Modulation Level

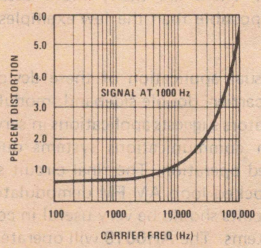

THERE WAS LITTLE SIGNIFICANT DIFFERENCE IN DISTORTION AT SIGNAL AMPLITUDES OF 3.0V, 1.0V, 0.3V, 0.1V RMS.

FIGURE 13. Recovered Signal Harmonic Distortion vs Carrier Frequency

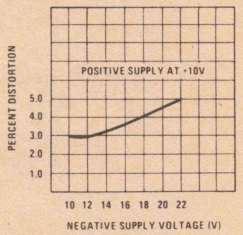

FIGURE 14. Harmonic Distortion vs Negative Power Supply Voltage

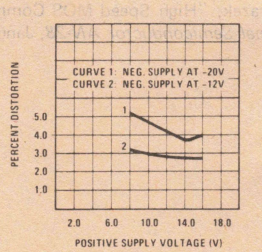

FIGURE 15. Harmonic Distortion vs Positive Supply Voltage

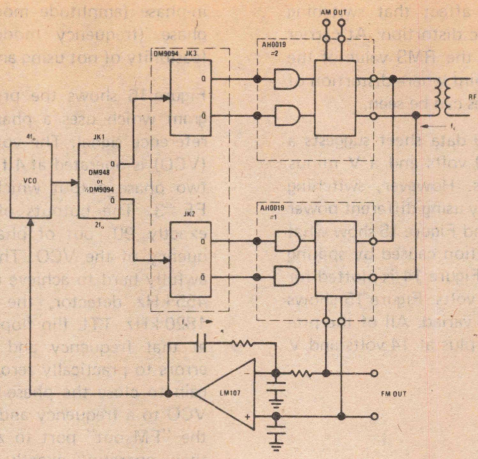

FIGURE 16. AM-FM Demodulator

CONCLUSION

The most obvious use of the **AH0014** and **AH0019** is in commutator applications, and it indeed is a very useful device for that purpose. The use of these switches in linear circuit applications is also very attractive because of DTL-TTL control compatibility. There are many more uses of these switches possible than the few examples described here.

The unusual application of these devices as suppressed carrier double-sideband modulators and demodulators suggests applications in servo systems and even communications systems due to their high speed operation. The final circuit suggestion, a phase-locked loop AM-FM demodulator without tuned circuits should be very useful in communications systems. The **AH0019** will operate quite well at an IF frequency of 455 kHz or less.

These basic capabilities of the MOS dual differential switch should encourage much greater usage of this type of device in new product designs.

REFERENCES

1. D. Mrazek, "High Speed MOS Commutators", *National Semiconductor AN-28*, January 1970.
2. D.L. Wollesen, "Analog Signal Commutation", *National Semiconductor AN-33*, February 1970.
3. D.L. Wollesen, "Analog Switching—High Speed With JFET's", *EDN*, January 15, 1970.
4. R.J. Widlar, "Monolithic Operational Amplifiers", *National Semiconductor AN-4*, April 1968.
5. R.J. Widlar, "Integrated Voltage Follower", *National Semiconductor AN-5*, May 1968.
6. W.S. Routh, "Applications Guide For Op Amps", *National Semiconductor AN-20*, February 1969.
7. R.J. Widlar, "I.C. Op Amp Beats FET's On Input Current", *National Semiconductor AN-29*, December 1969.
8. F.E. Terman, *Electronic and Radio Engineering*, McGraw-Hill, New York, 1955.
9. M. Schwartz, *Information Transmission Modulation and Noise*, McGraw-Hill, New York, 1959.

Applications for a New Ultra-High Speed Buffer

National Semiconductor
Application Note 48
Barry Siegel
Leonard Van Der Gaag
August 1971

INTRODUCTION

Voltage followers have gained in popularity in applications such as sample and hold circuits, general purpose buffers, and active filters since the introduction of IC operational amplifiers. Since they were not specifically designed as followers, these early IC's had limited usage due to low bandwidth, low slew rate and high input current. Usage of voltage followers was expanded in 1967 with the introduction of the LM102, the first IC designed specifically as a voltage follower. With the LM102, engineers were able to obtain an order of magnitude improvement in performance and extend usage into medium speed applications. The LM110, an improved LM102, was introduced in late 1969. However, even higher speeds and lower input currents were needed for very fast sample and holds, A to D and D to A converters, coax cable drivers, and other video applications.

The solution to this application problem was attained by combining technologies into a single package. The result, the LH0033 high speed buffer, utilizes JFET and bipolar technology to produce a ultra-fast voltage follower and buffer whose propagation delay closely approaches speed-of-light delay across its package, while not compromising input impedance or drive characteristics. Table I compares various voltage followers and illustrates the superiority of the LH0033 in both low input current or high speed video applications.

CIRCUIT CONSIDERATIONS

The junction FET makes a nearly ideal input device for a voltage follower, reducing input bias current to the picoamp range. However, FET's exhibit moderate voltage offsets and offset drifts which tend to be difficult to compensate. The simple voltage follower of Figure 1 eliminates initial offset and offset drift if Q_1 and Q_2 are identically matched transistors. Since the gate to source voltage of Q_2 equals zero volts, then Q_1's gate to source voltage equals zero volts. Furthermore as V_{P1} changes with temperature (approximately 2.2 mV/°C), V_{P2} will change by a corresponding amount. However, as load current is drawn from the output, Q_1 and Q_2 will drift at different rates. A circuit which overcomes offset voltage drift is used in a new high speed buffer amplifier, the LH0033. Initial offset is typically 5 mV and offset drift is 20 μV/°C. Resistor R_2 is used to establish the drain current of current source transistor, Q_2 at 10 mA.

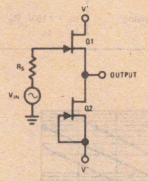

FIGURE 1. Simple Voltage Follower Schematic

The same drain current flows through Q_1 causing a voltage at the source of approximately 1.1V. The 10 mA flowing through R_1 plus Q_3's V_{BE} of 0.6V causes the output to sit at zero volts for zero volts in. Q_3 and Q_4 eliminate loading the input stage (except for base current) and CR_1 and CR_2 establish the output stage collector current.

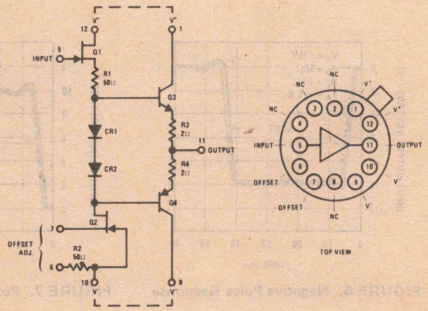

FIGURE 2. LH0033 Schematic

If Q_1 and Q_2 are matched, the resulting drift is reduced to a few μV/°C.

TABLE I COMPARISON OF VOLTAGE FOLLOWERS

PARAMETER	CONVENTIONAL MONOLITHIC OP AMP LM741	FIRST GENERATION VOLTAGE FOLLOWER LM102	SECOND GENERATION VOLTAGE FOLLOWER LM110	SPECIALLY DESIGNED VOLTAGE FOLLOWER LH0033
INPUT BIAS CURRENT	200 nA	3.0 nA	1.0 nA	0.05 nA
SLEW RATE	0.5V/μs	10V/μs	30V/μs	1500V/μs
BANDWIDTH	1.0 MHz	10 MHz	20 MHz	100 MHz
PROP. DELAY TIME	350 ns	35 ns	18 ns	1.2 ns
OUTPUT CURRENT CAPABILITY	±5 mA	±2 mA	±2 mA	±100 mA

PERFORMANCE OF THE LH0033 FAST VOLTAGE FOLLOWER/BUFFER

The major electrical characteristics of the LH0033 are summarized in Table II. All the virtues of a ultra-high speed buffer have been incorporated. Figure 3 is a plot of input bias current vs temperature and shows the typical FET input characteristics. Other typical performance curves are illustrated in Figures 4 through 10. Of particular interest is Figure 8, which demonstrates the performance of the LH0033 in video applications to over 100 MHz.

TABLE II

PARAMETER	CONDITIONS	VALUE	PARAMETER	CONDITIONS	VALUE
Output Offset Voltage	R_S = 100 kΩ	5 mV	Output Current Capability		±100 mA peak
Input Bias Current		50 pA	Slew Rate	R_S = 50Ω, R_L = 1k	1500V/μs
Input Impedance	V_{IN} = 1.0 Vrms R_L = 1k, f = 1 kHz	10^{11} Ω	Propagation Delay		1.2 ns
Voltage Gain	V_{IN} = 1.0 Vrms R_L = 1k, f = 1 kHz, R_S = 100k	0.98	Bandwidth	V_{IN} = 1.0 Vrms R_S = 50Ω, R_L = 1k	100 MHz
Output Voltage Swing	V_S = ±15V, R_S = 100k R_L = 1k	±13V			

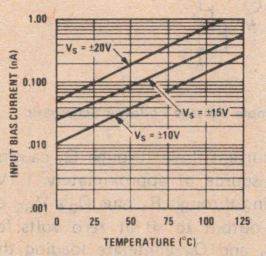

FIGURE 3. Input Bias Current vs Temperature

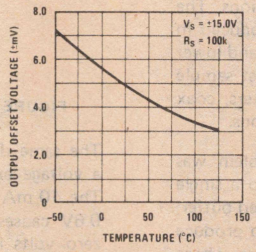

FIGURE 4. Output Offset Voltage vs Temperature

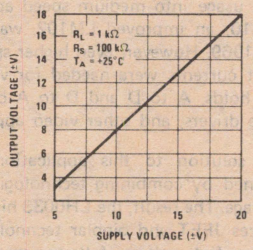

FIGURE 5. Output Voltage vs Supply Voltage

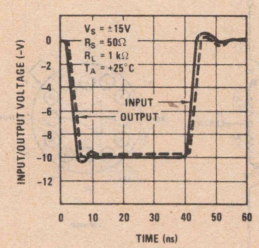

FIGURE 6. Negative Pulse Response

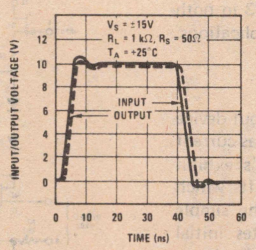

FIGURE 7. Positive Pulse Response

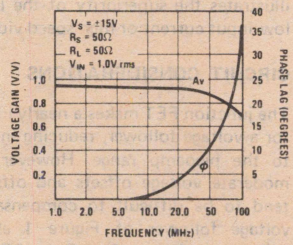

FIGURE 8. Frequency Response

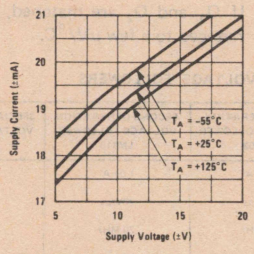

FIGURE 9. Supply Current vs Supply Voltage

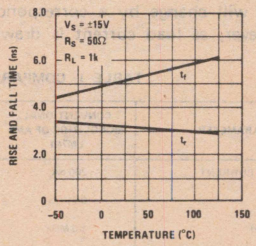

FIGURE 10. Rise and Fall Time vs Temperature

APPLICATIONS FOR ULTRA-FAST FOLLOWERS

The LH0033's high input impedance (10^{11} Ω, shunted by 2 pF) and high slew rate assure minimal loading and high fidelity in following high speed pulses and signals. As shown below, the LH0033 is used as a buffer between MOS logic and a high speed dual limit comparator. The device's high input impedance prevents loading of the MOS logic signal (even a conventional scope probe will distort high output impedance MOS). The LH0033 adds about a 1.5 ns to the total delay of the comparator. Adjustment of voltage divider R_1,R_2 allows interface to TTL, DTL and other high speed logic forms.

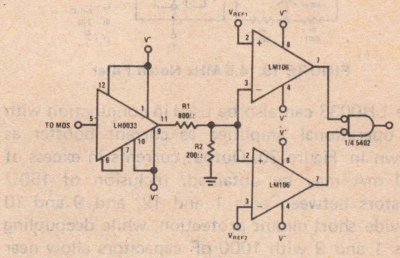

FIGURE 11. High Speed Dual Limit Comparator for MOS Logic

The LH0033 was designed to drive long cables, shielded cables, coaxial cables and other generally stringent line driving requirements. It will typically drive 200 pF with no degradation in slew rate and several thousand pF at a reduced rate. In order to prevent oscillations with large capacitive loads, provision has been made to insert damping resistors between V^+ and pin 1, and V^- and pin 9. Values between 47 and 100Ω work well for $C_L > 1000$ pF. For non-reactive loads, pin 12 should be shorted to pin 1 and pin 10 shorted to pin 9. A coaxial driver is shown in Figure 13. Pin 6 is shorted to pin 7, obtaining an initial offset of 5.0 mV, and the 43Ω coupled with the LH0033's output impedance (about 6Ω) match the coaxial cable's characteristic impedance. C_1 is adjusted as a function of cable length to optimize rise and fall time. Rise time for the circuit as shown in Figure 12, is 10 ns.

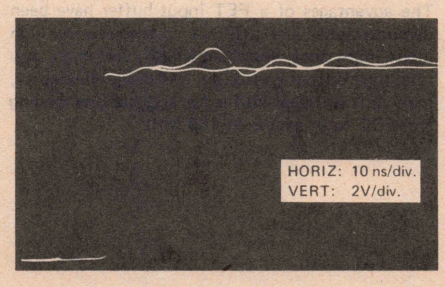

FIGURE 12. LH0033 Pulse Response into 10 Foot Open Ended Coaxial Cable

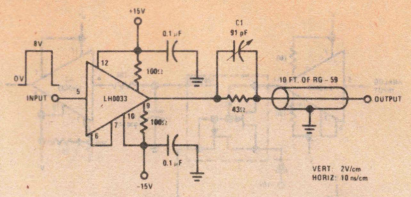

FIGURE 13.

Another application that utilizes the low input current, high speed and high capacitance drive capabilities of the LH0033 is a shield or line driver for high speed automatic test equipment. In this example, the LH0033 is mounted close to the device under test and drives the cable shield thus allowing higher speed operation since the device under test does not have to charge the cable.

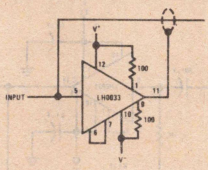

FIGURE 14. Instrumentation Shield/Line Driver

The LH0033's high input impedance and low input bias current may be utilized in medium speed circuits such as Sample and Hold, and D to A converters. Figure 15 shows an LH0033 used as a buffer in medium speed D to A converter.

Offset null is accomplished by connecting a 100Ω pot between pin 7 and V^-. It is generally a good idea to insert 20Ω in series with the pot to prevent excessive power dissipation in the LH0033 when the pot is shorted out. In non-critical or AC coupled applications, pin 6 should be shorted to pin 7. The resulting output offset is typically 5 mV at 25°C.

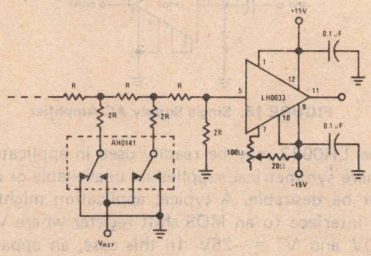

FIGURE 15.

The high output current capability and slew rate of the LH0033 are utilized in the sample and hold circuit of Figure 16. Amplifier, A1 is used to buffer high speed analog signals. With the configuration shown, acquisition time is limited by the time constant of the switch "ON" resistance and sampling capacitor, and is typically 200 or 300 ns. A_2's low input bias current, results in drifts in hold mode of $\frac{50\text{ mV}}{\text{sec}}$ at 25°C and $\frac{1\text{V}}{\text{sec}}$ at 125°C.

The LH0033 may be utilized in AC applications such as video amplifiers and active filters. The circuit of Figure 17 utilizes boot strapping to achieve input impedances in excess of 10 MΩ.

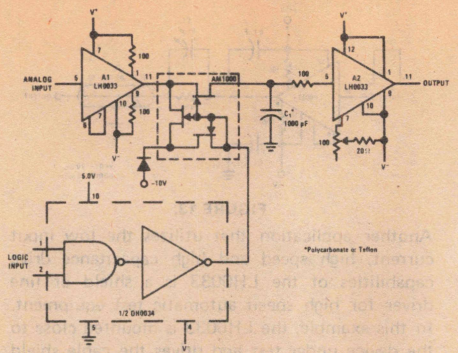

FIGURE 16. High Speed Sample & Hold

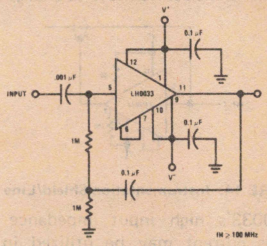

FIGURE 17. High Input Impedance AC Coupled Amplifier

A single supply, AC coupled amplifier is shown in Figure 18. Input impedance is approximately 500k and output swing is in excess of 8V peak-to-peak with a 12V supply.

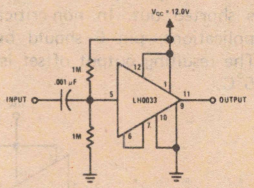

FIGURE 18. Single Supply AC Amplifier

The LH0033 may be readily used in applications where symmetrical supplies are unavailable or may not be desirable. A typical application might be an interface to an MOS shift register where V^+ = 5.0V and V^- = -25V. In this case, an apparent output offset occurs. In reality, the output voltage is due to the LH0033's voltage gain of less than unity. The output voltage shift due to asymmetrical supplies may be predicted by:

$$\Delta V_O \cong (1 - Av)\,\frac{(V^+ - V^-)}{2} = .005\,(V^+ - V^-)$$

where: Av = No load voltage gain, typically 0.99.

V^+ = Positive Supply Voltage.

V^- = Negative Supply Voltage.

For the foregoing application, ΔV_O would be -100 mV. This apparent "offset" may be adjusted to zero as outlined above.

Figure 19 shows a high Q, notch filter which takes advantage of the LH0033's wide bandwidth. For the values shown, the center frequency is 4.5 MHz.

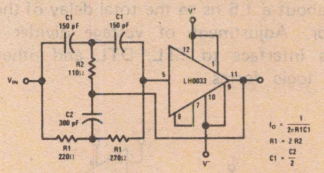

FIGURE 19. 4.5 MHz Notch Filter

The LH0033 can also be used in conjunction with an operational amplifier as current booster as shown in Figure 20. Output currents in excess of 100 mA may be obtained. Inclusion of 150Ω resistors between pins 1 and 12, and 9 and 10 provide short circuit protection, while decoupling pins 1 and 9 with 1000 pF capacitors allow near full output swing.

The value for the short circuit current is given by:

$$I_{SC} \cong \frac{V^+}{R_{LIMIT}} = \frac{V^-}{R_{LIMIT}}$$

where: $I_{SC} \leq 100$ mA.

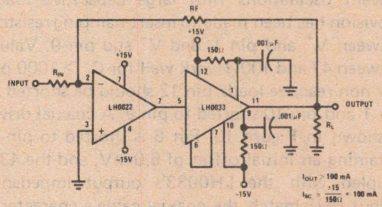

FIGURE 20. Using LH0033 as an Output Buffer

SUMMARY

The advantages of a FET input buffer have been demonstrated. The LH0033 combines very high input impedance, wide bandwidth, very high slew rate, high output capability, and design flexibility, making it an ideal buffer for applications ranging from DC to in excess of 100 MHz.

Pin Diode Drivers

National Semiconductor
Application Note 49
Barry Siegel
August 1971

INTRODUCTION

The DH0035/DH0035C is a TTL/DTL compatible, DC coupled, high speed PIN diode driver. It is capable of delivering peak currents in excess of one ampere at speeds up to 10 MHz. This article demonstrates how the DH0035 may be applied to driving PIN diodes and comparable loads which require high peak currents at high repetition rates. The salient characteristics of the device are summarized in Table I.

PARAMETER	CONDITIONS	VALUE
Differential Supply Voltage ($V^+ - V^-$)		30V Max.
Output Current		1000 mA
Maximum Power		1.5W
t_{delay}	PRF = 5.0 MHz	10 ns
t_{rise}	$V^+ - V^- = 20V$ 10% to 90%	15 ns
t_{fall}	$V^+ - V^- = 20V$ 90% to 10%	10 ns

Table I DH0035 Characteristics

PIN DIODE SWITCHING REQUIREMENTS

Figure 1 shows a simplified schematic of a PIN diode switch. Typically, the PIN diode is used in RF through microwave frequency modulators and switches. Since the diode is in shunt with the RF path, the RF signal is attenuated when the diode is forward biased ("ON"), and is passed unattenuated when the diode is reversed biased ("OFF").

There are essentially two considerations of interest in the "ON" condition. First, the amount of "ON" control current must be sufficient such that RF signal current will not significantly modulate the "ON" impedance of the diode. Secondly, the time required to achieve the "ON" condition must be minimized.

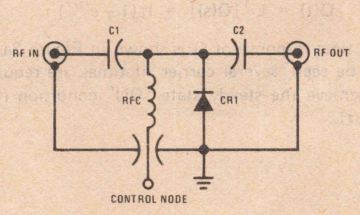

FIGURE 1. Simplified PIN Diode Switch

The charge control model of a diode[1,2] leads to the charge continuity equation given in equation (1).

$$i = \frac{dQ}{dt} + \frac{Q}{\tau} \qquad (1)$$

where: Q = charge due excess minority carriers
τ = mean life time of the minority carriers

Equation (1) implies a circuit model shown in Figure 2. Under steady conditions $\frac{dQ}{dt} = 0$, hence:

$$I_{DC} = \frac{Q}{\tau} \text{ or } Q = I_{DC}\tau \qquad (2)$$

where: I = steady state "ON" current.

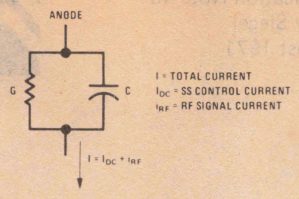

FIGURE 2. Circuit Model for PIN Switch

The conductance is proportional to the current, I; hence, in order to minimize modulation due to the RF signal, $I_{DC} >> i_{RF}$. Typical values for I_{DC} range from 50 mA to 200 mA depending on PIN diode type, and the amount of modulation that can be tolerated.

The time response of the excess charge, Q, may be evaluated by taking the Laplace transform of equation (1) and solving for Q:

$$Q(s) = \frac{\tau I(s)}{1 + s\tau} \qquad (3)$$

Solving equation (3) for Q(t) yields:

$$Q(t) = L^{-1}[Q(s)] = I\tau(1 - \epsilon^{-t/\tau}) \qquad (4)$$

The time response of Q is shown in Figure 3a. As can be seen, several carrier lifetimes are required to achieve the steady state "ON" condition ($Q = I_{DC} \cdot \tau$).

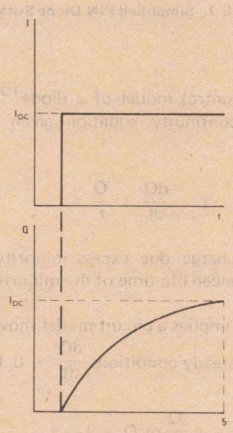

FIGURE 3a.

The time response of the charge, hence the time for the diode to achieve the "ON" state could be shortened by applying a current spike, Ipk, to the diode and then dropping the current to the steady state value, I_{DC}, as shown in Figure 3b. The optimum response would be dictated by:

$$(Ipk)(t) = \tau \cdot I_{DC} \qquad (5)$$

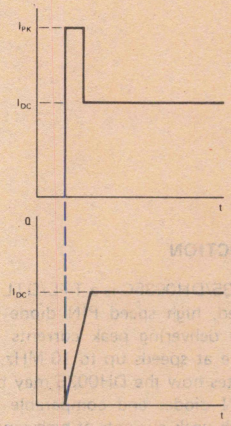

FIGURE 3b.

The turn off requirements for the PIN diode are quite similar to the turn on, except that in the "OFF" condition, the steady current drops to the diode's reverse leakage current.

A charge, $I_{DC} \cdot \tau$, was stored in the diode in the "ON" condition and in order to achieve the "OFF" state this charge must be removed. Again, in order to remove the charge rapidly, a large peak current (in the opposite direction) must be applied to the PIN diode:

$$-Ipk >> \frac{Q}{\tau} \qquad (6)$$

It is interesting to note an implication of equation (5). If the peak turn on current were maintained for a period of time, say equal to τ, then the diode would acquire an excess charge equal to Ipk·T. This same charge must be removed at turn off, instead of a charge $I_{DC} \cdot \tau$, resulting in a considerably slower turn off. Accordingly, control of the width of turn on current peak is critical in achieving rapid turn off.

APPLICATION OF THE DH0035 AS A PIN DIODE DRIVER

The DH0035 is specifically designed to provide both the current levels and timing intervals required to optimally drive PIN diode switches. Its

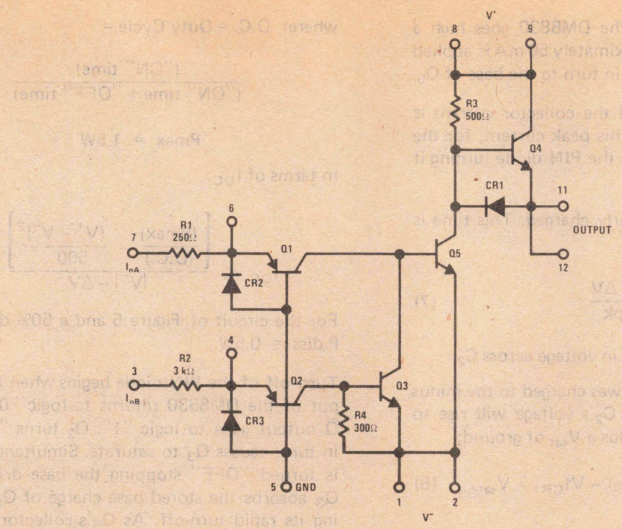

FIGURE 4. DH0035 Schematic Diagram

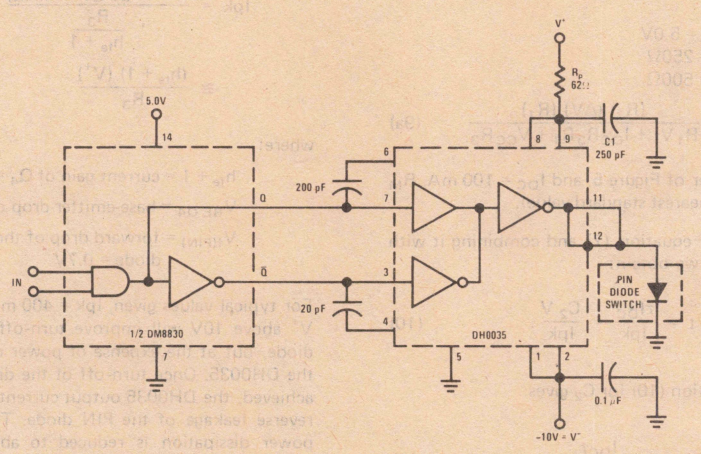

FIGURE 5. Cathode Grounded Design

schematic is shown in Figure 4. The device utilizes a complementary TTL input buffer such as the DM7830/DM8830 or DM5440/DM7440 for its input signals.

Two configurations of PIN diode switch are possible: cathode grounded and anode grounded. The design procedures for the two configurations will be considered separately.

ANODE GROUND DESIGN

Selection of power supply voltages is the first consideration. Table I reveals that the DH0035 can withstand a total of 30V differentially. The supply voltage may be divided symmetrically at ±15V, for example. Or asymmetrically at +20V and −10V. The PIN diode driver shown in Figure 5, uses ±10V supplies.

When the Q output of the DM8830 goes high a transient current of approximately 50 mA is applied to the emitter of Q_1 and in turn to the base of Q_5.

Q_5 has an h_{fe} = 20, and the collector current is h_{fe} x 50 or 1000 mA. This peak current, for the most part, is delivered to the PIN diode turning it "ON" (RF is "OFF").

Ipk flows until C_2 is nearly charged. This time is given by:

$$t = \frac{C2\,\Delta V}{Ipk} \qquad (7)$$

where: ΔV = the change in voltage across C_2.

Prior to Q_5's turn on, C_2 was charged to the minus supply voltage of −10V. C_2's voltage will rise to within two diode drops plus a V_{sat} of ground:

$$V = |V^-| - Vf(\text{PIN Diode}) - Vf_{CR1} - V_{sat_{Q5}} \qquad (8)$$

for $V^- = -10V$, $\Delta V = 8V$.

Once C_2 is charged, the current will drop to the steady state value, I_{DC}, which is given by:

$$I_{DC} = \frac{V}{R_M} - \frac{V^+}{R_3} - \frac{V_{CC}}{R_1} \qquad (9)$$

where: $V_{CC} = 5.0V$
$R_1 = 250\Omega$
$R_3 = 500\Omega$

$$\therefore R_M = \frac{(R_3)(\Delta V)(R_1)}{R_1 V^+ + I_{DC} R_3 R_1 + V_{CC} R_3} \qquad (9a)$$

For the driver of Figure 5, and I_{DC} = 100 mA, R_M is 56 ohms (nearest standard value).

Returning to equation (7) and combining it with equation (5) we obtain:

$$t = \frac{\tau I_{DC}}{Ipk} = \frac{C_2 V}{Ipk} \qquad (10)$$

Solving equation (10) for C_2 gives:

$$C_2 = \frac{I_{DC}\tau}{V} \qquad (11)$$

For τ = 10 ns, C_2 = 120 pF.

One last consideration should be made with the diode in the "ON" state. The power dissipated by the DH0035 is limited to 1.5W (see Table I). The DH0035 dissipates the maximum power with Q_5 "ON". With Q_5 "OFF", neglible power is dissipated by the device. Power dissipation is given by:

$$P_{diss} \cong \left[I_{DC}\,(|V^-| - \Delta V) + \frac{(V^+ - V^-)^2}{R3} \right] \times (D.C.) \leq P_{max} \qquad (12)$$

where: D.C. = Duty Cycle =

$$\frac{(\text{"ON" time})}{(\text{"ON" time} + \text{"OFF" time})}$$

Pmax = 1.5W

In terms of I_{DC}:

$$I_{DC} \leq \frac{\left[\frac{(Pmax)}{(D.C.)} - \frac{(V^+ - V^-)^2}{500} \right]}{|V^-| - \Delta V} \qquad (12a)$$

For the circuit of Figure 5 and a 50% duty cycle, P diss = 0.5W.

Turn-off of the PIN diode begins when the Q output of the DM8830 returns to logic "0" and the $\overline{Q}$ output goes to logic "1". Q_2 turns "ON", and in turn, causes Q_3 to saturate. Simultaneously, Q_1 is turned "OFF" stopping the base drive to Q_5. Q_3 absorbs the stored base charge of Q_5 facilitating its rapid turn-off. As Q_5's collector begins to rise, Q_4 turns "ON". At this instant, the PIN diode is still in conduction and the emitter of Q_4 is held at approximately −0.7V. The instantaneous current available to clear stored charge out of the PIN diode is:

$$Ipk = \frac{V^+ - V_{BE\,Q4} + V_{f(PIN)}}{\frac{R_3}{h_{fe}+1}} \cong \frac{(h_{fe}+1)(V^+)}{R_3} \qquad (13)$$

where:

$h_{fe} + 1$ = current gain of Q_4 = 20

$V_{BE\,Q4}$ = base-emitter drop of Q_4 = 0.7V

$V_{f(PIN)}$ = forward drop of the PIN diode = 0.7V

For typical values given, Ipk = 400 mA. Increasing V^+ above 10V will improve turn-off time of the diode, but at the expense of power dissipation in the DH0035. Once turn-off of the diode has been achieved, the DH0035 output current drops to the reverse leakage of the PIN diode. The attendant power dissipation is reduced to about 35 mW.

CATHODE GROUND DESIGN

Figure 6 shows the DH0035 driving a cathode grounded PIN diode switch. The peak turn-on current is given by:

$$Ipk \cong \frac{(V^+ - V^-)(h_{fe}+1)}{R_3} \qquad (14)$$

= 800 mA for the values shown.

The steady state current, I_{DC}, is set by Rp and is given by:

$$I_{DC} = \frac{V^+ - 2V_{BE}}{\frac{R_3}{h_{fe}+1} + R_P} \qquad (15)$$

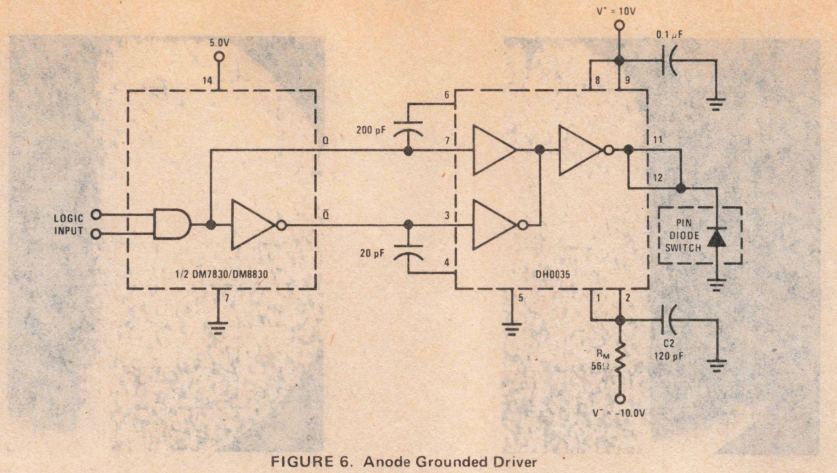

FIGURE 6. Anode Grounded Driver

where: $2V_{BE}$ = forward drop of Q_4 base emitter junction plus V_f of the PIN diode = 1.4V.

In terms of Rp, equation (15) becomes:

$$Rp = \frac{(h_{fe} + 1)(V^+ - 2V_{BE}) - I_{DC}R_9}{(h_{fe} + 1)\, I_{DC}} \qquad (15a)$$

For the circuit of Figure 6, and I_{DC} = 100 mA, Rp is 62 ohms (nearest standard value).

It now remains to select the value of C_1. To do this, the change in voltage across C_1 must be evaluated. In the "ON" state, the voltage across C_1, Vc, is given by:

$$(Vc)_{ON} = \frac{V^+R_3 + Rp(h_{fe} + 1)(2V_{BE})}{R_3 + (h_{fe} + 1)\, Rp} \qquad (16)$$

For the values indicated above, $(Vc)_{ON}$ = 3.8V.

In the "OFF" state, Vc is given by:

$$(Vc)_{OFF} = \frac{V^+R_3 - |V^-|Rp}{Rp + R_3} \qquad (17)$$

= 8.0V for the circuit of Figure 6.

Hence, the change in voltage across C_1 is:

$$V = (Vc)_{OFF} - (Vc)_{ON} \qquad (18)$$
$$= 8.0 - 3.8$$
$$= 4.2V$$

The value of C_4 is given, as before, by equation (11):

$$C_1 = \frac{I_{DC}\tau}{V^-} \qquad (19)$$

For a diode with τ = 10 ns and I_{DC} = 100 mA, C_1 = 250 pF.

Again, the power dissipated by the DH0035 must be considered. In the "OFF" state, the power dissipation is given by:

$$P_{OFF} = \left[\frac{V^+ - V^-)^2}{R_3}\right](D.C.) \qquad (20)$$

where: D.C. = duty cycle =

$$\frac{\text{"OFF" time}}{\text{"OFF" time + "ON" time}}$$

The "ON" power dissipation is given by:

$$P_{ON} = \left[\frac{(Vc)_{ON}^2}{R_3} + I_{DC} \times (Vc)_{ON}\right](1 - D.C.) \qquad (21)$$

where: $(Vc)_{ON}$ is defined by equation (16).

Total power dissipated by the DH0035 is simply $P_{ON} + P_{OFF}$. For a 50% duty cycle and the circuit of Figure 6, P diss = 616 mW.

The peak turn-off current is, as indicated earlier, equal to 50 mA x h_{fe} which is about 1000 mA. Once the excess stored charge is removed, the current through Q_5 drops to the diodes leakage current. Reverse bias across the diode = $V^- - V_{sat} \cong$ −10V for the circuit of Figure 6.

REPETITION RATE CONSIDERATIONS

Although ignored until now, the PRF, in particular, the "OFF" time of the PIN diode is important in selection of C_2, R_M, and C_1, Rp. The capacitors must recharge completely during the diode "OFF" time. In short:

$$4\, R_MC_2 \leq t_{OFF} \qquad (22a)$$

$$4\, RpC_1 \leq t_{OFF} \qquad (22b)$$

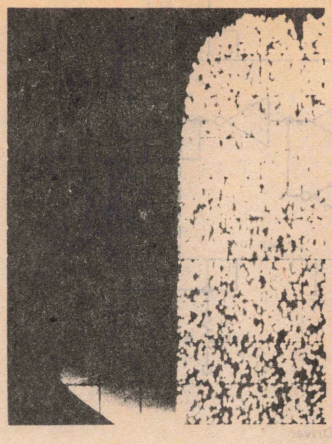

FIGURE 7. RF Turn-On (10 ns/cm)

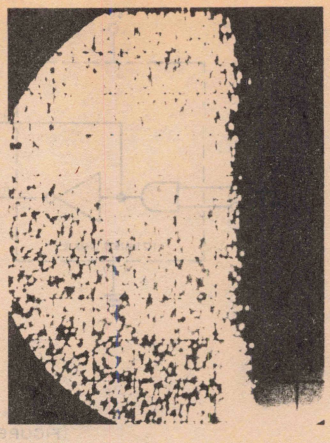

FIGURE 8. RF Turn-Off (10 ns/cm)

CONCLUSION

The circuit of Figure 6 was breadboarded and tested in conjunction with a Hewlett-Packard 33622A PIN diode.

I_{DC} was set at 100 mA, $V^+ = 10.0V$, $V^- = 10V$. Input signal to the DM8830 was a 5V peak, 100 kHz, 5 μs wide pulse train. RF turn-on was accomplished in 10-12 ns while turn-off took approximately 5 ns, as shown in Figures 7 and 8.

In practice, adjustment C_2 (C_1) may be required to accommodate the particular PIN diode minority carrier life time.

SUMMARY

A unique circuit utilized in the driving of PIN diodes has been presented. Further a technique has been demonstrated which enable the designer to tailor the DH0035 driver to the PIN diode application.

REFERENCES

1. "Pulse, Digital, & Switching Waveforms", Jacob Millman & Herbert Taub, *McGraw-Hill Book* Company, Inc., New York, N.Y.
2. "Models of Transistors and Diodes", John G. Linvill, *McGraw-Hill Book* Company, Inc., New York, N.Y.
3. *National Semiconductor AN-18,* Bert Mitchell, March 1969.
4. *Hewlett-Packard* Application Note 314, January 1967.

New Design Techniques for FET Op Amps

National Semiconductor
Application Note 63
Robert K. Underwood
March 1972

Introduction

The LH0052, LH0042 and LH0022 series operational amplifiers are "monobrid" integrated circuits consisting of a monolithic dual junction field effect transistor followed by a special linear integrated circuit amplifier chip. Each device features very closely matched input characteristics, very high input impedance, and ultra low input currents with no compromise in noise, common mode rejection ratio, open loop gain or slew rate. The LH0052 is internally laser nulled and features offset current of 100 femtoamps max at 25°C (100 pA at +125°C), offset voltage of 200 microvolts max and offset drift of 5 μV/°C max. Unlike most module FET op amps, this series of op amps does not require "grading" of electrical performance at final test. Different die types are used in each member of the family to assure availability and lowest possible cost. The amplifiers are internally compensated to be unity gain stable and require no external parts for operation with the exception of feedback and input impedances as dictated by the application. Amplifiers are available in TO-99, (TO-5 metal can) or 14-lead cavity dual-in-line package and are specified either for the full military temperature range of −55°C to +125°C or for an expanded commercial temperature range of −25°C to +85°C. Operation is specified for power supply voltages between 10 volts (±5 volts) and 44 volts (±22 volts). Table I below, and Typical Performance Characteristics (last page) give a summary of other major parameters illustrating similarities and differences of members of the series. See individual data sheets for complete specifications.

TABLE I

PERFORMANCE COMPARISON OF LH0052/LH0022/LH0042 FET OP AMP FAMILY

PARAMETER (T_A = 25°C)	LH0052	LH0022	LH0042	UNITS
Offset Voltage (Max)	0.5	4	20	mV
Offset Voltage Drift (Typ)	2	5	5	μV/°C
Offset Current (Max)	2.5	2.0	5.0	pA
Bias Current (Max)	1.0	10	25	pA
Open Loop Gain (Min)	100	100	50	V/mV
Bandwidth (Typ)	1	1	1	MHz
Slew Rate (Typ)	3	3	3	V/μs
Output Current Drive (Min)	±10	±10	±10	mA
Min Supply Voltage	±5	±5	±5	V
Max Supply Voltage	±22	±22	±22	V
Input Voltage Range (Min)	±12	±12	±12	V
CMRR (Min)	80	80	70	dB
Compensation Components	0	0	0	
Output Current Limit	Yes	Yes	Yes	
Simple Offset Null	Yes	Yes	Yes	
Package Types	TO-5	DIP, TO-5	DIP, TO-5	

Why FETs?

The virtue of super gain bipolar transistors as the input stage to operational amplifiers is well known[1,2] and widely used in such amplifiers as the LM108, LM112, and LM216. These amplifiers attain very low input bias currents by special processing that allows the first stage to run at very low emitter currents while achieving current gains of 1500. This results in relatively constant bias and offset currents with temperature tending to increase at low temperatures where transistor gain is lowest. (Figure 1)

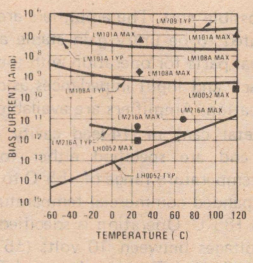

FIGURE 1. Typical I_b vs. Temperature for Several Op Amps

The low emitter current available in the typical super gain amplifier severely limits the slew rate attainable, the devices that have input currents in the same area as the LH0052 family normally have slew rates in the neighborhood of a few tenths of a volt per microsecond. As long as a FET is operated in its normal linear region, its input current is not materially affected by the channel current. The LH0052 family, therefore, runs more input stage current and thus attains a typical slew rate of three volts per microsecond. A soon-to-be announced device (LH0062) has demonstrated slew rates greater than 50 volts per microsecond with the same input characteristics as the LH0052 family.

FET's Feature Superior Noise at High Source Resistances

Figure 2 is a plot of total amplifier noise at 100 Hz (1 Hz bandwidth) vs source resistance for the LH0052 family of FET amplifiers and the LM108, representative of the best super-gain bipolar amplifiers. Thermal noise contributed by the source resistance is also plotted. Note that at low source resistances the LM108 is lower noise; at high source resistance the LH0052 series is superior.

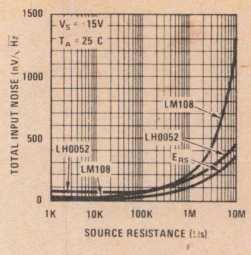

FIGURE 2. Total Equivalent Input Noise Voltage

A useful noise model applicable to operational amplifiers in general is shown in Figure 3. It consists of an ideal noiseless amplifier preceded by a number of noise sources. Amplifier voltage noise, E_N, appears directly in series with one of the inputs. Current noise from the amplifier develops an additional noise voltage across the source resistance. The RMS value of thermal noise from the source resistances can be calculated from the equation $E_{rs} = \sqrt{4kT(BW)R_s}$ which simplifies to $E_{rs} = 4\sqrt{R_s}\ nV/\sqrt{Hz}$ for room temperature calculations and resistor values in kilohms.

The total spot noise present at the input to the ideal amplifier may be found by summing the RMS values of the three noise voltage sources as follows:

$$E_T = \sqrt{E_N^2 + 2\,(R_s I_N)^2 + 2E_{rs}^2}$$

E_N comes directly from data of the type plotted in the figure by looking at the flat portion of the curve

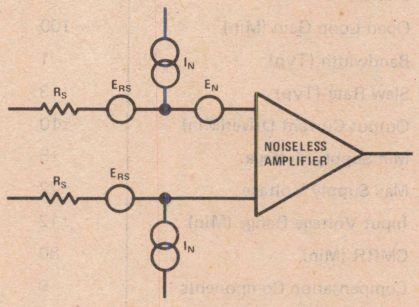

FIGURE 3. Noise Model of an Operational Amplifier

below 10k and assuming that the current noise is insignificant in this area. For the LH0052 and LM108 E_N, at 100 Hz, 1 Hz bandwidth, is 70 nV/$\sqrt{Hz}$ and 35 nV/$\sqrt{Hz}$ respectively. I_N may be computed from a total noise measurement at high source resistance by using a calculated value of E_{rs} and the previously measured value of E_N.

$$I_N = \sqrt{(E_T^2 - E_N^2 - 2E_{rs}^2)/2R_s^2}$$

For the LH0052 family and the LM108, I_N is 10 fA/$\sqrt{Hz}$ and 100 fA/$\sqrt{Hz}$ respectively.

One way to illustrate the importance of noise current in deciding which of two amplifier types will be better in a given situation is to set the total noise equal for the two cases and solve for the value of R_s at which this occurs. The amplifier with the lower noise voltage will be superior at source resistances lower than this value; the one with lower current noise will be better at higher resistances. Note that this is merely calculating the intersection of the curves of Figure 2. The intersection will normally lie near 150k when comparing the LH0052 family with the best of the presently available bipolar amplifiers.

Low Offset Voltage is no Problem with Modern JFETs

FETs have a reputation for poor control of voltage matching characteristics that developed from behavior of the early matched dual discrete devices. These were invariably a pair of separate FET chips mounted on the same header tested for gate to source voltage match at some specified current at room temperature. Devices constructed in this manner tracked rather poorly over temperature due to G_{fs} mismatch and temperature gradients across the header.

The monolithic dual FETs of the FM1100 series interweave the channels of the two halves of the device and achieve a match not only of V_{gs} but of all other parameters. Further, the V_{gs} match is preserved over a wide range of drain currents, drain to source voltage, and temperature. The voltage drift attainable with this technique is exceeded only by the very best bipolar devices.

It is possible to fabricate FETs and bipolar transistors on the same wafer at the same time. Why not build a single monolithic FET/bipolar amplifier utilizing each where it is best suited? It would seem at first glance that this would necessarily result in a cheaper, more reliable product. At the present state of the art, severe compromises are necessary to both the FET and bipolar devices so constructed as exemplified by the 740 and 536 with the net result that specifications must be relaxed and/or a yield loss suffered. The two chip "monobrid" approach taken with the LH0052 family maximizes performance while allowing lowest cost.

Circuit Description

Figure 4 is a simplified schematic typical of all of the amplifiers in the family. The input FET (Q_1, Q_2) is a monolithic dual similar in construction to the discrete FM1100 series device. The stage is operated as a source follower with V^+ applied directly to the drains for the maximum possible common mode range.

A differential common base PNP stage (Q_3, Q_4) serves as the load for the input FETs. The bases of this stage form the bias point for the backside gate of the monolithic input FET[3]. To obtain high voltage gain from the PNP common base stage, the output resistances of Q_5 and Q_6 are used as loads, giving effective values of about 2 megohms while at the same time converting the differential current signal into a single ended voltage. The operating drain current for the input stage is determined by the bias network composed of the current source Q_{10} and the diodes Q_{11} and Q_{12}; target current is 40 microamps per side.

A Darlington driver (Q_{16}, Q_{17}) is used to avoid loading the first stage output. The output stage uses a conventional complementary symmetry design with a bias current of about 60 microamps through Q_{14} and Q_{20} to minimize crossover distortion. Output current is limited to about ±25 mA at 25°C ambient decreasing to about ±17 mA at +125°C. The output characteristics are similar to those of conventional amplifiers.

Simple Offset Voltage Adjustment does not Degrade Drift or CMRR

These amplifiers use the same internal offset nulling technique as the LM741 and others, that is, a single 10k pot connected between the offset nulling pins and V^- as shown in Figure 5. Adjustment of this pot will always produce offset null. With the premium devices of the series, it may be desirable to restrict the range of adjustment to increase the precision of the null. This may be done

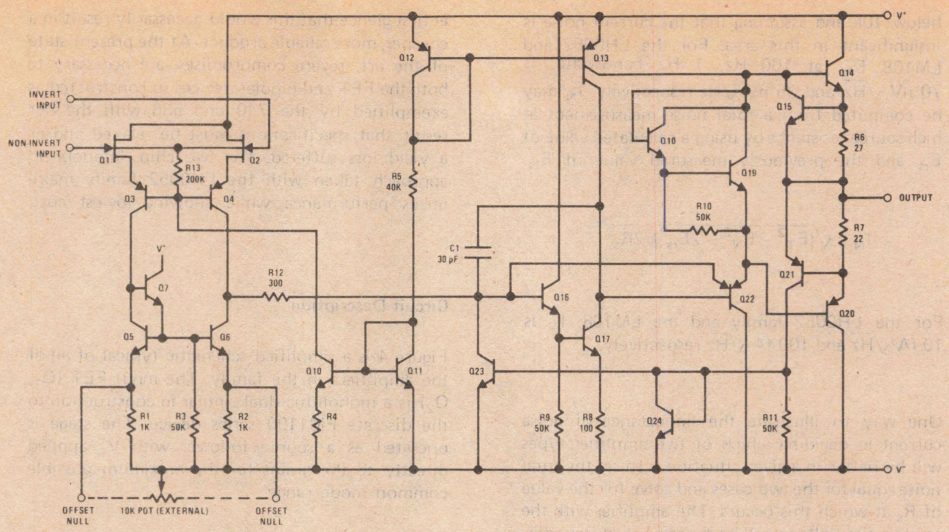

FIGURE 4. Internal Schematic

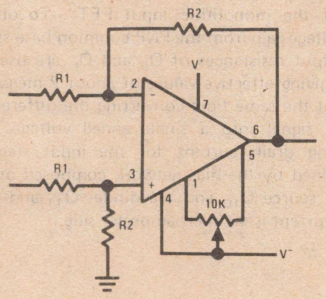

FIGURE 5. Trimpot Offset Trim

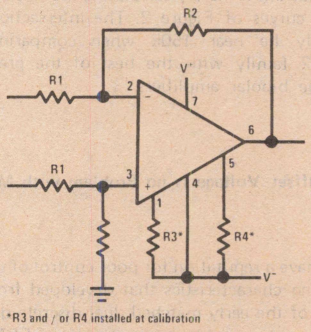

*R3 and / or R4 installed at calibration

FIGURE 6. Fixed Resistor Offset Trim

by inserting a resistor of about 100k in series with the wiper of the pot. This technique provides a method of externally nulling offset voltage of the amplifiers to zero with virtually no effect on offset voltage drift or CMRR.

By definition, offset voltage is that voltage which must be applied between the input terminals to obtain zero output voltage. This suggests a straightforward and practical "universal"[4] system to null the offset in an operating circuit. Figure 7 illustrates one way that an adjustable voltage in the millivolt range may be connected in series with the input signal to subtract the amplifier offset. If this technique of offset nulling at the inputs of the amplifier is used, the TO-5 devices of the series will be pin compatible with virtually all of the 8 Pin TO-5 amplifiers on the market today, bipolar or FET.

Careful PC Board Layout Must be Observed

In order to realize the full low input current capabilities of these amplifiers, considerable care must be exercised in the design of the input circuitry and in the selection of materials contacting the input conductors. A leakage impedance of even 10^{12} ohms to 15 volts produces a leakage current of 15 pA, much higher than amplifier input current. This level of leakage may be inadvertently produced by socket leakage, poor quality or imperfectly cleaned printed circuit boards, or improperly cured protective coatings. Sockets are to be avoided if possible; they can not only degrade leakage current, but may cause other unsuspected erratic behavior when used in severe environments. (If absolutely unavoidable, they should be high quality, preferably Teflon.) Printed circuit board material should be judged both on initial resistivity and on the likelihood of degradation by

outside influences. Teflon and polycarbonate are particularly recommended; glass epoxy may be used if it is protected with a silicone or epoxy coating to prevent moisture absorption. If operation at high humidities is required, this coating will be desirable anyway to control surface leakage. All residues of previous operations, such as soldering flux, inks, and resists, must of course be thoroughly removed before coating.

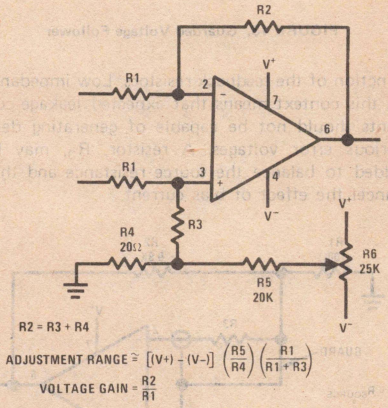

FIGURE 7. Universal Offset Trim

Another approach which has been successfully used with the TO-5 amplifiers is to terminate all critical connections on Teflon standoff insulators. These may be interconnected as required with Teflon insulated wire, keeping connections as short as possible to minimize noise pick-up. A short length of Teflon tubing slipped over the wire from the amplifier prevents contact with the oversize hole in the mounting board. The remainder of the amplifier connections may be terminated conventionally, either to printed circuit lands or to other standoff insulators.

Input Guarding Improves System Performance

Even with properly cleaned and coated printed circuit boards, leakage currents can limit the circuit performance under severe environmental conditions. In most cases with the LH0052 family devices, leakage will be primarily to V^- as the inputs are between the offset null pin (which in normal operation runs at a voltage very near V^-) and the V^- pin itself. This would seem to predict that leakage into the inverting and non-inverting inputs should at least be of the same polarity, but the effects are too unpredictable to make much use of the cancellation which should occur.

These currents may be intercepted before they reach the amplifier inputs by a guard conductor in the leakage path operating at the same potential as the inputs. Resistance between the inputs and the guard will cause little current to flow because of the premise that the guard voltage equals the input voltage. Suggested board layouts for the various package types are shown in Figures 8 through 11.

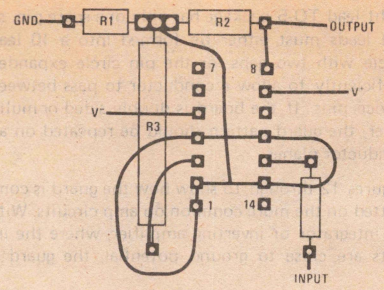

FIGURE 8. DIP Non-Inverting Amplifier PC Layout

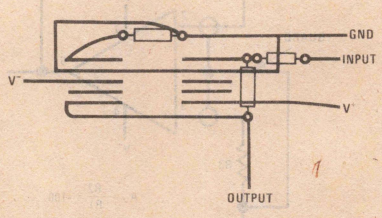

FIGURE 9. Flat Pack Inverting Amplifier PC Layout

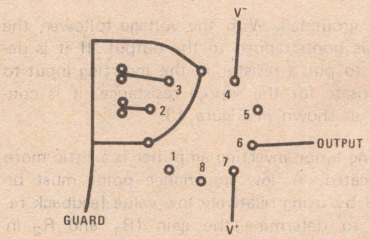

FIGURE 10. TO-5 – 10 Pin Pattern PC Layout

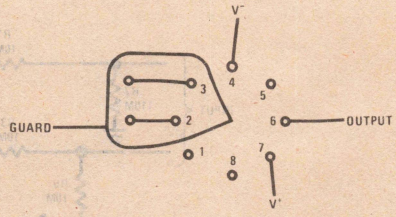

FIGURE 11. TO-5 – 8 Lead Pattern

The flat pack and dual-in-line packages have an unconnected pin on either side of the inputs. These may be used as shown, both to continue the guard into the package and as a convenient method of surrounding the inputs with a guard conductor without running a line between device pins. The

eight lead TO-5 package has only one spare pin, so the leads must either be formed into a 10 lead circle with two gaps, or the pin circle expanded sufficiently to allow a conductor to pass between device pins. If the board is double sided or multilayer, the guard pattern should be repeated on all conductor planes.

Figures 12 through 15 show how the guard is committed on the more common op amp circuits. With an integrator or inverting amplifier, where the inputs are close to ground potential, the guard is

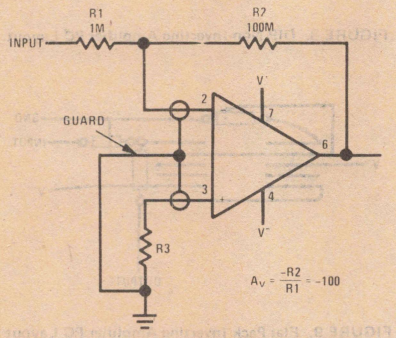

FIGURE 12. Guarded Inverting Amplifier

simply grounded. With the voltage follower, the guard is bootstrapped to the output. If it is desirable to put a resistor in the inverting input to compensate for the source resistance, it is connected as shown in Figure 13.

Guarding a non-inverting amplifier is a little more complicated. A low impedance point must be created by using relatively low value feedback resistors to determine the gain (R_1 and R_2 in Figure 14). The guard is then connected to the

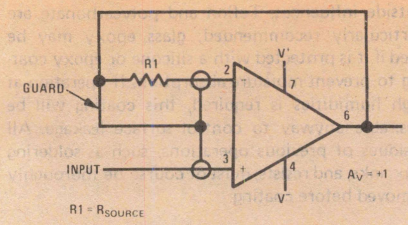

FIGURE 13. Guarded Voltage Follower

junction of the feedback resistors. Low impedance in this context means that expected leakage currents should not be capable of generating deleterious error voltages. A resistor, R_3, may be added to balance the source resistance and thus cancel the effect of bias current.

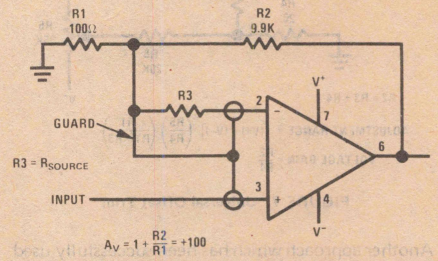

FIGURE 14. Guarded Non-Inverting Amplifier

The general case of a full differential configuration may require the use of a guard driver amplifier A_2 as shown in Figure 15. Resistors R_5 and R_6 develop the proper voltage for the guard at their junction, but it will normally be impractical to make them low enough resistance due to source

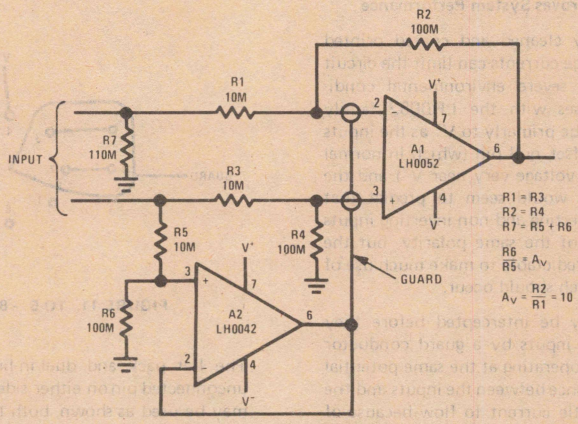

FIGURE 15. Guarded Full Differential Amplifier

loading. R_7 is included to balance the effect of R_5 plus R_6 and thus not degrade the closed loop common mode rejection.

Voltage Followers

The excellent common mode rejection and range of the amplifiers in this series suggest their use as unity gain voltage follower amplifiers. They perform well in this function with the one precaution shown on the circuit of Figure 16. The straightforward circuit with a direct feedback connection

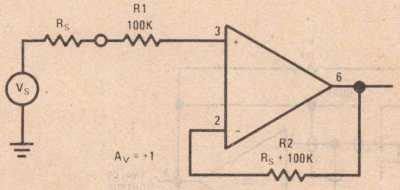

FIGURE 16. Unity Gain Voltage Follower

and no resistors will function, but if a low impedance signal having a slew rate faster than the amplifier can follow is applied to the input, a differential input voltage might be developed in excess of the absolute maximum. R_1 limits the current under these conditions to a safe value of 200 μA. R_2 is included to cancel the error voltage due to bias current and should in general be equal to the source resistance plus R_1.

For applications requiring voltage gain as well as high input impedance, a voltage divider may be included in the feedback path as in Figure 17. The voltage gain of this circuit is approximately $1 + R_2/R_3$ (neglecting amplifier open loop gain).

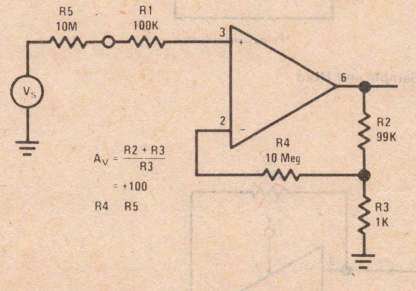

FIGURE 17. Non-Inverting Amplifier

R_4 is included as a convenient variable to equalize resistances in the two amplifier inputs: R_4 in series with the parallel combination of R_2 and R_3 should be set equal to the source resistance plus R_1. Note that all of these resistors may not be necessary depending on the required voltage gain, source impedance, accuracy requirement, temperature range, and amplifier selected.

Precision Integrator

The low input bias currents attainable with amplifiers of this series make them a natural choice for integrator applications requiring long time constants. Figure 18 illustrates a typical practical circuit. R_1 should be selected so that the total

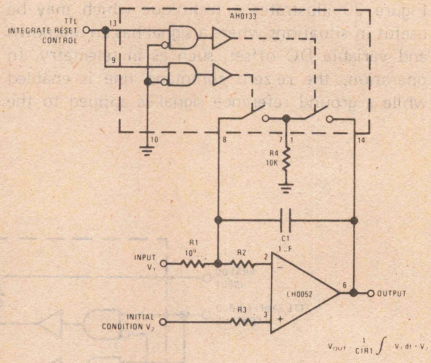

FIGURE 18. Precision Integrator

leakage current at the summing node is smaller than the signal current (V_1/R_1) by a margin sufficiant to insure the required accuracy, i.e. $V_1/R_1 >> I_{b1}$. C_1 should be chosen for low leakage, stability, accuracy, and low voltage coefficient. Polystyrene or polycarbonate dielectric is the best choice for capacitances up to about one microfarad, Teflon is good for the lower values.

R_2 is included to protect the input circuit during the reset transient, although many low speed applications will not require it at all. If the resistance of the reset switch is 100 ohms, the maximum current that could flow in C_1 is 10V/100 = 0.1 amp. In reality this may well be limited to a lower value by I_{DSS}, if the reset switch is an FET. Then the rate of change of voltage cannot exceed 0.1 amp/1 μF = 0.1 V/μs which is well within the slew rate capabilities of the amplifier. R_3, used to balance the resistance in the inputs, should be made equal to the sum of R_2 and the reset switch resistance.

Sample/Hold Amplifiers

The LH0052 family of amplifiers is well suited for use as a buffer amplifier in long hold-time sample/hold circuits. They may be used in any of the common configurations where improved hold performance is required. Figure 19A illustrates one circuit taking advantage of the low bias currents attainable. R_1 serves to bootstrap the connection between analog switch S_1 and S_2 so that there is essentially no voltage across S_1 in the hold mode. When S_1 and S_2 are closed to enter the sample mode, the effect of R_1 is slight as it is much higher resistance than the switches. After a long enough time, C_1 will charge to the input voltage, the amplifier will buffer it to the output, and both

ends of R_1 will be at the input potential so it will have no effect at all after the transient. Figure 19B illustrates an alternate circuit configuration with input buffer amplifier.

Re-Zeroing Amplifier

Figure 20 illustrates a technique which may be useful in situations where a signal has an unknown and variable DC offset, such as in telemetry. In operation, the re-zero command line is enabled while a ground reference signal is applied to the input of the system. This causes C_1 to charge to a level proportional to the system DC offset. When the re-zero line is deactivated, the amplifier behaves like a conventional inverting stage, subtracting off the system offset and giving a true ground referenced output.

If the total worst case leakage at the capacitor node is 1 nA, and if $C_1 = 0.01\ \mu F$, then the drift rate is $10^{-9}/0.01 \cdot 10^{-6} = 0.1$ V/s. For a 10 volt full scale system requiring an accuracy of 0.1% (10 mV), the amplifier would need a re-zeroing reference every 100 ms.

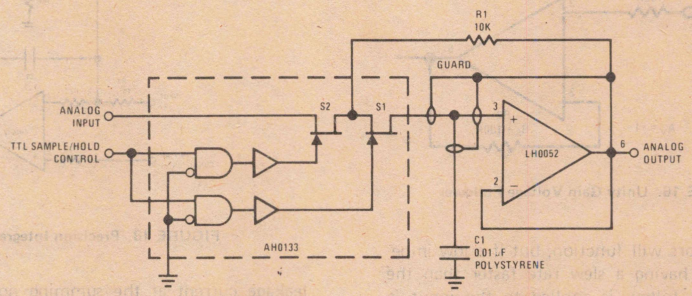

FIGURE 19A. Low Drift Sample/Hold

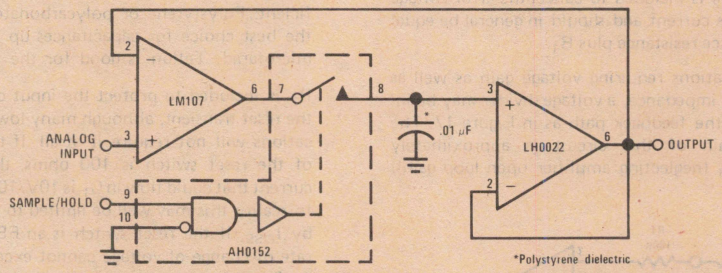

FIGURE 19B. Precision Sample and Hold

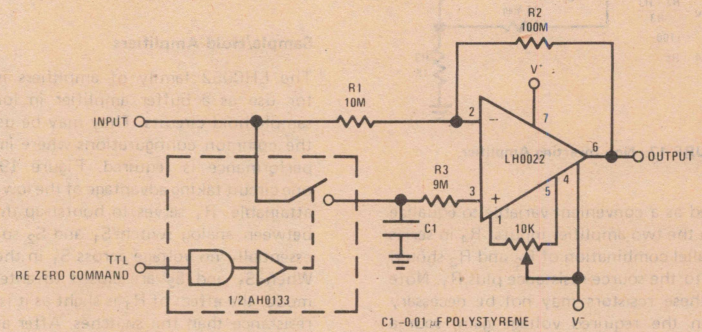

FIGURE 20. Re-Zeroing Amplifier

Precision Current Sink

Figure 21 illustrates a variation on a common technique for generating a precisely regulated cirrent. This circuit could be used in conjunction with another FET input amplifier connected as a

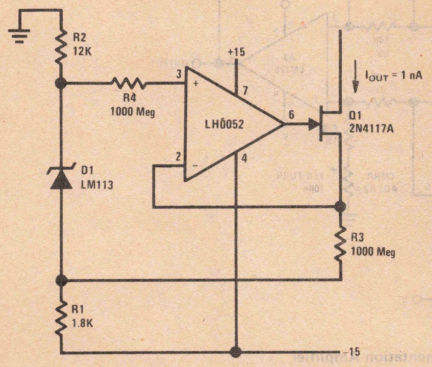

FIGURE 21. Precision Current Sink

high input impedance follower to form an ohmmeter for accurately measuring very high resistances. R_1, R_2 and D_1 form bias and reference voltages near, but within, the common mode and output voltage limits of the amplifier. Q_1 is selected for very low gate leakage so that the current in its source will be nearly identical to the feedback current in its drain. In operation, the amplifier output will cause the gate of Q_1 to be cut off however much is necessary to keep the voltage across R_3 equal to 1.220 volts, the breakdown voltage of D_1. The LM113 diode is available to an initial voltage accuracy of 1% (12.2 mV) and is guaranteed to drift less than 15 mV over the temperature range, thus by specifying the LH0052 amplifier and a 1% resistor, a current sink can be designed for a worst case initial accuracy near 2% and a drift over the temperature range of less than 2%. The technique may be applied over a wide range of currents by properly scaling R_3 and its balancing resistor R_4; a mirror image current source is possible using a P channel FET for Q_1.

Precision Comparator

FET amplifiers have a significant advantage over bipolar in precision voltage comparator applications: the input current is nearly independent of input voltage. With a bipolar input stage, input current is $1/\beta$ of the emitter current, but the emitter current can vary from zero when the stage is cut off to twice the nominal value when fully conducting. Furthermore, the inputs are often internally clamped to a diode drop for protection of the emitter base junctions.

As long as the input and reference signals are no more than 4 volts apart in the circuit of Figure 22, the input currents remain low and constant. This is an adequate signal range for many applications, especially in view of the offset voltage performance available in the top of the line amplifiers. If wider signal range is required, resistors R_1 and R_2 should be included to limit the input current to a safe value. Internal zener junctions will limit the differential input voltage to a safe value if the input current is limited 200 μA.

The output clamp circuit shown in Figure 22 will drive 3 standard TTL loads or 30 National low power TTL loads. Considerable power may be saved by increasing R_3 if full fan-out is not required. If only 2 low power loads are to be driven, the required low state output current is 360 μA, so R_3 = 10V/360 μA = 27k.

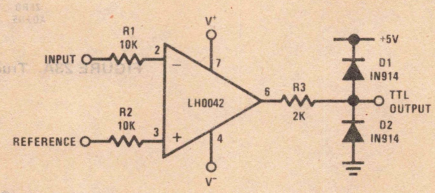

FIGURE 22. Precision Voltage Comparator

True Instrumentation Amplifier

Figure 23A illustrates an instrumentation amplifier that features high differential and common mode input resistance (10^{12} ohms), ±10V common mode and differential mode input range, .01% gain accuracy at A_v = 1000, and 110 dB CMRR with 1 kΩ imbalance in bridge source resistance. Input current is less than 1 pA and offset drift is less than 5 μV/°C. R_1 provides a simple means of adjusting gain over a wide range without degrading CMRR. R_2 is an initial trim used to maximize CMRR without using super precision matched resistors. Input common voltage is sensed via R_3 and R_4 and the LM110 provides low impedance V_{CM} drive to input cable shields to reduce leakage and coupling to inputs. If the input current of the LH0052 (1 pA max) is not low enough, additional circuitry as shown in figure 23B may be added to provide "Zero" input bias current.

Ultra Low Level Transconductance or Charge Amplifier

A picoamp amplifier for pH meters, medical electronics and radiation detectors is illustrated in Figure 24. A high quality glass sealed feedback resistor such as Victoreen type RX-1 should be employed as well as guard shielding as discussed earlier. Optionally C_1 may be added to convert the circuit to a charge amplifier with R_L used to provide DC stability.

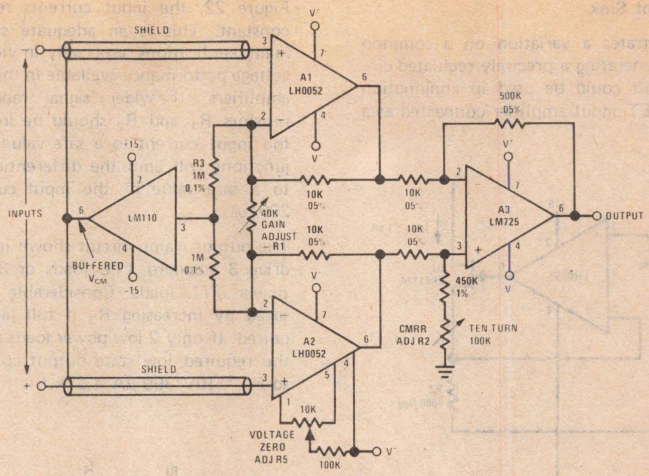

FIGURE 23A. True Instrumentation Amplifier

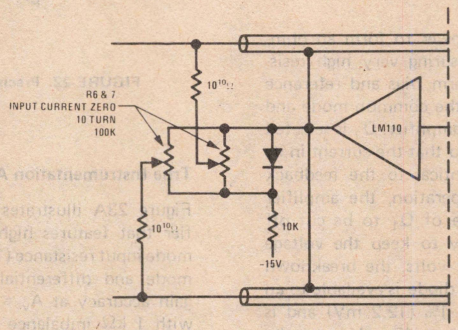

FIGURE 23B. Zero Input Bias Current

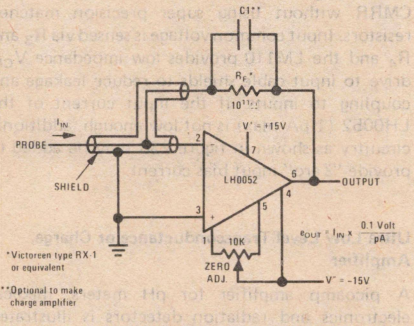

FIGURE 24. Picoamp Amplifier

Precision Subtractor for Automatic Test Gear

It is often necessary in testing linear circuits to take the difference between two voltage readings occuring at different times. The specialized sample/hold circuit shown in Figure 25 performs this function simply and accurately. Initially, S_1 and S_2 are closed and S_3 open with the logic input in the TTL "1" state. This allows capacitor C_1 to charge to the same voltage as the e_{IN1} input signal. When the logic input is taken to TTL "0", S_1 and S_2 open and S_3 closes, causing the difference between the stored value of e_{IN1} and the present value of e_{IN2} to appear at the non-inverting input of the LH0022.

The low leakage and high input impedance of the LH0022 allows the use of a reasonable size hold capacitor while at the same time providing gain for scaling, if needed. Note that the two analog inputs, e_{IN1} and e_{IN2} may be connected together to take the voltage difference on a single line at two different times. The disable input is used to open all switches, for example, to ignore a transient. If not needed, the disable input should be grounded.

Sensitive Low Cost "VTVM"

Figure 26 illustrates a modern approach to constructing VTVM's and VOM's. The LH0042 replaces all active circuitry. Optionally the circuit may be run off of 8 flashlight batteries and only draws 20 mW of power. The clever designer would add some more switching to allow operation of the FET op amp in transconductance mode as shown in Figure 24, thus combining both voltage and current measuring capability into the same circuit.

How to Build a FET Op Amp "Module"

The LH0052 series when compared spec for spec with modules usually offers superior performance and significantly lower cost. What's the difference between modules and these integrated circuit amplifiers? In most cases the answer is nothing but two .01 μF power supply decoupling capacitors. To make your own module merely build a small 1-1/4 x 1-1/4 printed circuit board that adapts the pin-out of the LH0052 to your module requirement. No need to pot the assembly in epoxy, the LH0052 family is completely heremetic and does not absorb moisture. Some modules specify higher output current capability than the ±10 mA of the LH0052. To build a ±100 mA output "module" FET op amp, simply add a LH0002 buffer as shown in Figure 27.

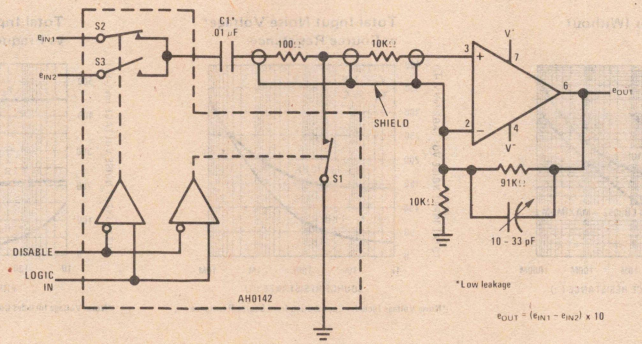

FIGURE 25. Precision Subtractor for Automatic Test Gear

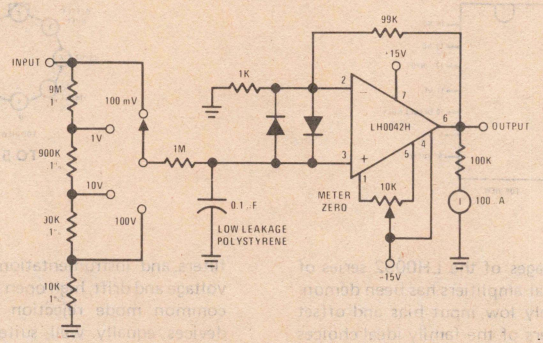

FIGURE 26. Sensitive Low Cost "VTVM"

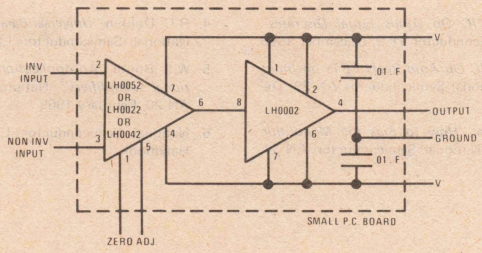

FIGURE 27. 100 mA Output FET Op Amp "Module"

Typical Performance Characteristics

Input Offset Current vs Temperature

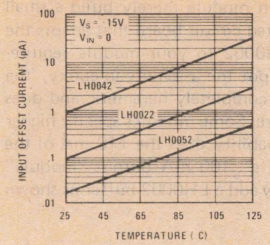

Input Bias Current vs Temperature

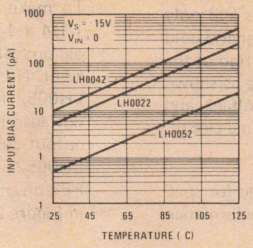

Offset Error (Without V_{OS} Null)

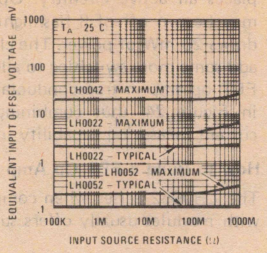

Offset Error (Without V_{OS} Null)

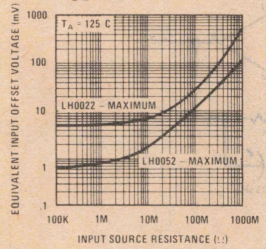

Total Input Noise Voltage* vs Source Resistance

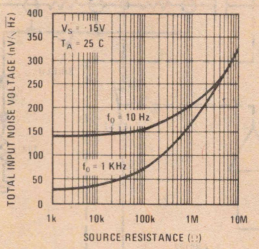

*Noise Voltage Includes Contribution from Source Resistance

Total Input Noise Voltage* vs Frequency

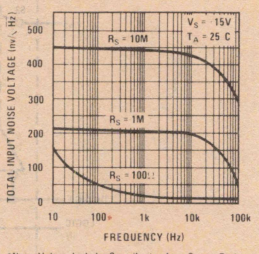

*Noise Voltage Includes Contribution from Source Resistor

Connection Diagrams

Dual-In-Line Package

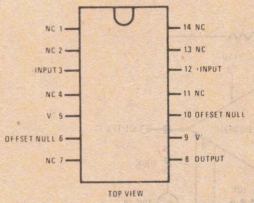

Metal Can Package

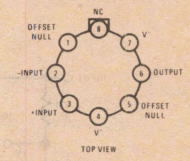

TO-5

Conclusion

The practical advantages of the LH0052 series of FET input operational amplifiers has been demonstrated. The extremely low input bias and offset current make members of the family ideal choices for critical applications in hold amplifiers, active filters and instrumentation. The low input offset voltage and drift, high open loop gain, and excellent common mode rejection combine to make the devices equally well suited for general purpose applications including summers, subtractors, and oscillators.

References

1. R.J. Widler *"IC Op Amps Equal Discretes"* National Semiconductor TP-9, December 1968
2. R.J. Widler *"IC Op Amp Beats FETs on Input Current"* National Semiconductor AN-29, December 1969
3. D.L. Wollesen *"How to Bias the Monolithic JFET Dual"* National Semiconductor AN-34, March 1970
4. R.C. Dobkin *"Universal Balancing Techniques"* National Semiconductor LB-9, August 1969
5. W.S. Routh *"An Applications Guide for Operational Amplifiers"* National Semiconductor AN-20, February 1969
6. National Semiconductor Linear Applications Handbook

Applications for a High Speed FET Input Op Amp

National Semiconductor
Application Note 75
Barry Siegel
December 1972

INTRODUCTION

The principal limitations in speed and bandwidth in IC FET input op amps have been reduced by over an order of magnitude with the introduction of the LH0062/LH0062C. Internal compensation assures unity gain stability with bandwidths in excess of 15 MHz. Voltage follower slew rate is typically 75V/μs and is guaranteed in excess of 50V/μs. Furthermore, external components may be used to extend the slew rate to 120V/μs and settling times under 1μs. The LH0062H (TO-5) is pin compatible with LM101, LM741 and LH0022. A summary of the LH0062's performance characteristics is given in Table 1.

PARAMETER (T_A = 25°C)	MIN	TYP	MAX	UNITS
Input Offset Voltage		2.0	5.0	mV
Input Bias Current			20	pA
Voltage Gain	50	100		V/mV
Slew Rate	50	75		V/μs
Bandwidth		15		MHz

TABLE 1. Summary of LH0062 Characteristics

CIRCUIT DESCRIPTION

The LH0062 is basically a two stage amplifier (Figure 1) consisting of a N channel junction FET input stage (Q_1 and Q_2) and a PNP output stage (Q_4 and Q_5). Q_1 and Q_2 are a well matched interdigitated monolithic pair that provide high common mode rejection and input offset voltage tracking usually associated only with bipolar designs. The current mirror (Q_6 and Q_7) converts to single ended operation in addition to providing active high impedance load for Q_4 and Q_5 thus providing high gain. Q_3 and D_1 provides a temperature compensated current source for the input stage and Q_8, Q_9, D_2 and D_3 form a class AB output buffer. Detailed schematic is illustrated in Figure 2. Note that the FET inputs are protected by 5V zener diodes and input current under transient conditions should be limited by inserting a 1k ohm or larger resistor in series with one of the inputs.

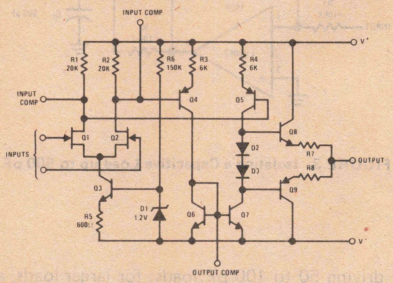

FIGURE 1. Simplified LH0062 Circuit Schematic

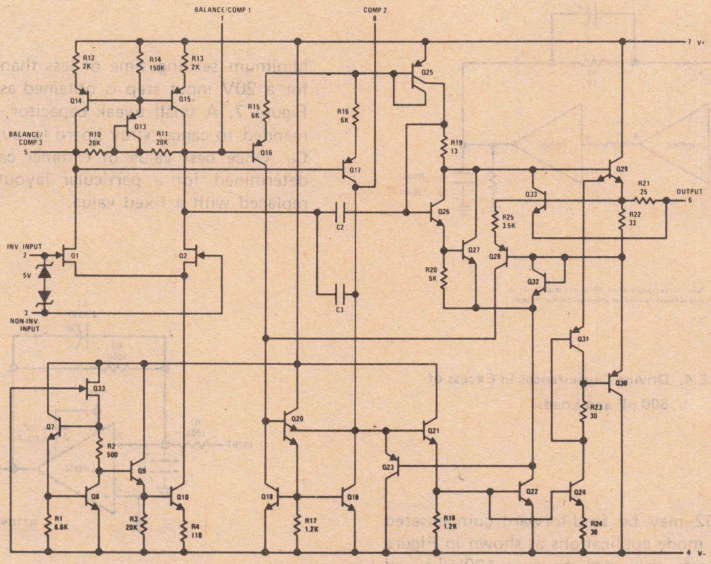

FIGURE 2. Complete LH0062 Schematic

COMPENSATION CONSIDERATIONS

As noted earlier, the LH0062 is internally compensated for unity gain stability. However, a few precautions are advised. Like most wide band amplifiers, the LH0062 is sensitive to power supply inductance, and decoupling the supplies with 0.1μF ceramic disc capacitors within an inch or two of the device will prevent spurious oscillations and save a fair amount of grief. The device is capable

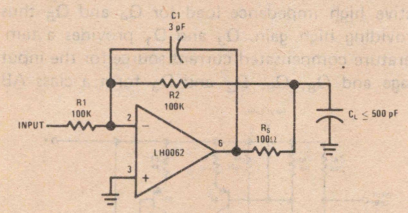

FIGURE 3. Isolating a Capacitive Load up to 500 pF

of driving 50 to 100 pF loads; for larger loads, an isolation resistor, R_3 as shown in Figure 3 is recommended. Alternatively, a current buffer such as the LH0002 or LH0033 may be used for loads in excess of 500 pF with no degradation in slew rate as shown in Figure 4.

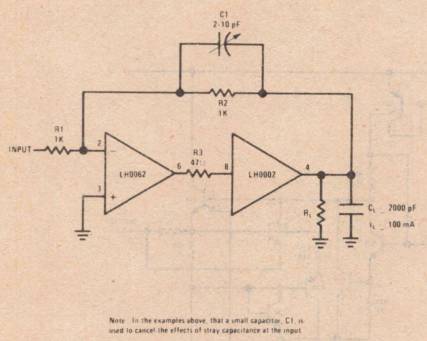

FIGURE 4. Driving Capacitances in Excess of 500 pF and Loads

The LH0062 may be feed-forward compensated in inverting mode applications as shown in Figure 5. This boosts slew rate to over 120V/μs and bandwidth to over 30 MHz. When full bandwidth is

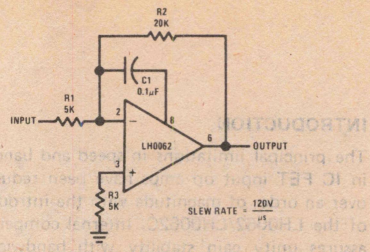

FIGURE 5. Feed Forward Compensation

not required, the device may be over-compensated as shown in Figure 6 to reduce bandwidth to 5 MHz. This technique improves phase margin and reduces susceptibility to spurious oscillations in applications where speed is less critical.

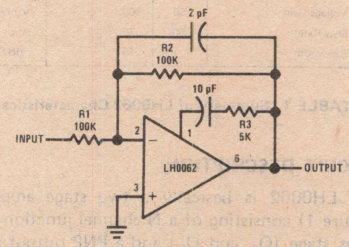

FIGURE 6. Overcompensation

Minimum settling time of less than 1μs to 0.1% for a 20V input step is obtained as illustrated in Figure 7. A small tweak capacitor, C_1 is recommended to cancel stray board layout capacitance, C_S. Once best value of trimmer capacitor C_1 is determined for a particular layout, it may be replaced with a fixed value.

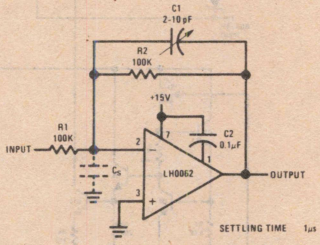

FIGURE 7. Compensation for Minimum Settling Time

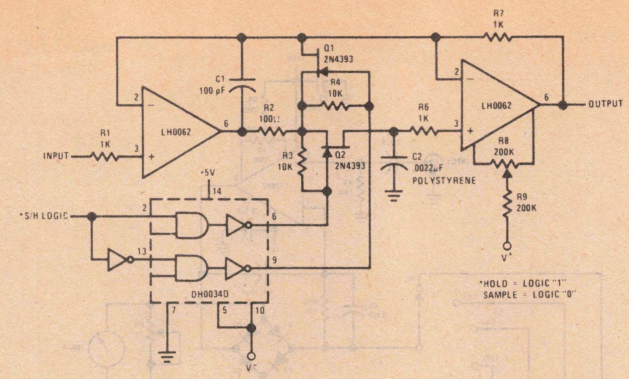

FIGURE 8. High Speed Sample & Hold

APPLICATIONS

The circuit of Figure 8 is a high speed sample and hold with sample acquisition time of 10μs for 0.1% accuracy and aperture time of approximately 25 ns. Resistor, R_6, is used to limit input current during power on and off transients. Although the inputs of the LH0062 are protected by back-to-back diodes excessive input current could damage the device. Resistor R_9 and the pot, R_8, allow null of the output offset with negligible effect on offset drift.

The peak detector of Figure 9 will acquire a +10V peak signal in under 4μs with droop rates under 20 mV/sec. Reversing the polarity of diodes D_1 and D_2 will allow peak detecting negative signals. Any ultra-low leakage diode may be substituted for the 2N930 collector-base junction.

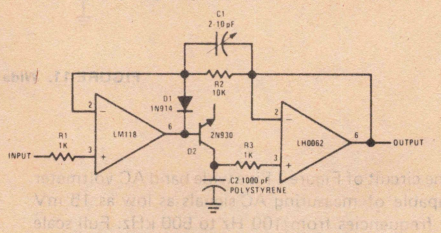

FIGURE 9. High Speed Peak Detector

The circuit of Figure 10 is a programmable integrator with a range in period from 1μs to 1 ms. For best results C_1 through C_4 should be low leakage construction such as polycarbonate or polystyrene. A simple method of implementing the offset adjustment is to momentarily insert a 100k ohm resistor between pins 2 and 6 of the LH0062. With the switches of the AH5009 off, the output may be set to zero with R_2.

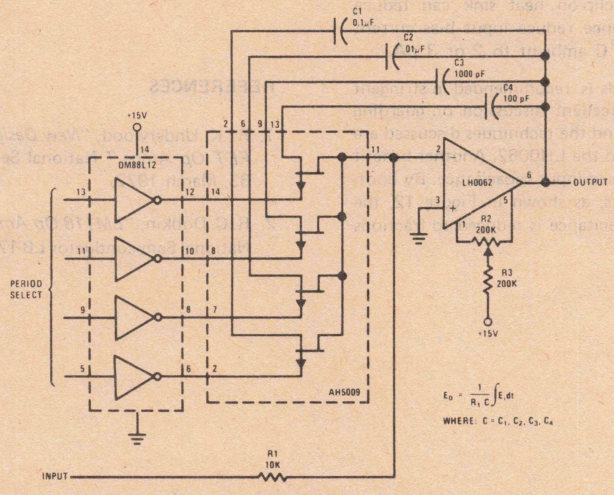

FIGURE 10. Programmable Integrator

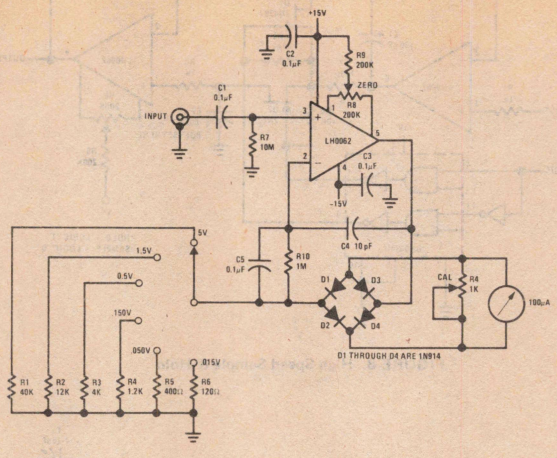

FIGURE 11. Wide Band AC Voltmeter

The circuit of Figure 11 is a wide band AC voltmeter capable of measuring AC signals as low as 15 mV at frequencies from 100 Hz to 500 kHz. Full scale sensitivity may be changed by altering the values R_1 through R_6 ($R \cong V_{IN}/100\mu A$).

HEAT SINKING, GUARDING, AND BOOTSTRAPPING

The LH0062 is specified for operation without an external heat sink. However, standby power is typically 240 mW causing a junction rise of approximately 60°C. A clip-on heat sink can reduce internal heating hence reduce input bias current from 20 pA at 25°C ambient to 2 or 3 pA.

Guarding input leads is recommended in stringent applications. An excellent discussion on guarding is given in AN-63 and the techniques discussed are directly applicable to the LH0062. Another benefit of guarding is reduced input capacitance. By bootstrapping the inputs, as shown in Figure 12, the apparent input capacitance is reduced to fractions of a pico-farad.

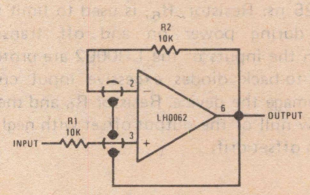

FIGURE 12. Guard/Bootstrap for Unity Gain

Furthermore, the case of the LH0062 is electrically isolated, and the output may be tied to case in order to eliminate stray capacitance introduced by the header.

REFERENCES

1. R. K. Underwood, *"New Design Techniques for FET Op Amps,"* National Semiconductor AN-63, March 1972.

2. R. C. Dobkin, *"LM118 Op Amp Slews 70V/μs,"* National Semiconductor LB-17, September 1971.

Applying Modern Clock Drivers to MOS Memories

National Semiconductor
Application Note 76
B. Siegel, M. Scott
February 1973

INTRODUCTION

MOS memories present unique system and circuit challenges to the engineer since they require precise timing of input wave forms. Since these inputs present large capacitive loads to drive circuits, it is often that timing problems are not discovered until an entire system is constructed. This paper covers the practical aspects of using modern clock drivers in MOS memory systems. Information includes selection of packages and heat sinks, power dissipation, rise and fall time considerations, power supply decoupling, system clock line ringing and crosstalk, input coupling techniques, and example calculations. Applications covered include driving various types shift registers and RAM's (Random Access Memories) using logical control as well as other techniques to assure correct non-overlap of timing waveforms.

Although the information given is generally applicable to any type of driver, monolithic integrated circuit drivers, the DS0025, DS0026 and DS0056 are selected as examples because of their low cost.

The DS0025 was the first monolithic clock driver. It is intended for applications up to one megacycle where low cost is of prime concern. Table I illustrates its performance while Appendix I describes its circuit operation. Its monolithic, rather than hybrid or module construction, was made possible by a new high voltage-gold doped process utilizing a collector sinker to minimize $V_{CE\,SAT}$.

The DS0026 is a high speed, low cost, monolithic clock driver intended for applications above one megacycle. Table II illustrates its performance characteristics while its unique circuit design is presented in Appendix II. The DS0056 is a variation of the DS0026 circuit which allows the system designer to modify the output performance of the circuit. The DS0056 can be connected (using a second power supply) to increase the positive output voltage level and reduce the effect of cross coupling capacitance between the clock lines in the system. Of course the above are just examples of the many different types that are commercially available. Other National Semiconductor MOS interface circuits are listed in Appendix III.

The following section will hopefully allow the design engineer to select and apply the best circuit to his particular application while avoiding common system problems.

PRACTICAL ASPECTS OF USING MOS CLOCK DRIVERS

Package and Heat Sink Selection

Package type should be selected on power handling capability, standard size, ease of handling, availability of sockets, ease or type of heat sinking required, reliability and cost. Power handling capability for various packages is illustrated in Table III. The following guidelines are recommended:

TABLE I. DS0025 Characteristics

PARAMETER	CONDITIONS $(V^+ - V^-) = 17V$	VALUE	UNITS
t_{ON}		15	ns
t_{OFF}	$C_{IN} = 0.0022\mu F$, $R_{IN} = 0\Omega$	30	ns
t_r	$C_L = 0.0001\mu F$, $R0 = 50\Omega$	25	ns
t_f		150	ns
Positive Output Voltage Swing	$V_{IN} - V^- = 0V$, $I_{OUT} = -1mA$	$V^+ - 0.7$	V
Negative Output Voltage Swing	$I_{IN} = 10mA$, $I_{OUT} = 1mA$	$V^- + 1.0$	V
On Supply Current (V^+)	$I_{IN} = 10$ mA	17	mA

TABLE II. DS0026 Characteristics

PARAMETER	CONDITIONS $(V^+ - V^-) = 17V$	VALUE	UNITS
t_{ON}		7.5	ns
t_{OFF}	$C_{IN} = 0.001\mu F$, $R_{IN} = 0\Omega$	7.5	ns
t_r	$R0 = 50\Omega$, $C_L = 1000$ pF	25	ns
t_f		25	ns
Positive Output Voltage Swing	$V_{IN} - V^- = 0V$, $I_{OUT} = -1mA$	$V^+ - 0.7$	V
Negative Output Voltage Swing	$I_{IN} = 10mA$, $I_{OUT} = 1mA$	$V^- + 0.5$	V
On Supply Current (V^+)	$I_{IN} = 10$ mA	28	mA

The TO-5 ("H") package is rated at 750 mW still air (derate at 200°C/W above 25°C) soldered to PC board. This popular cavity package is recommended for small systems. Low cost (about 10 cents) clip-on heat sink increases driving capability by 50%.

The 8-pin ("N") molded mini-DIP is rated at 600 mW still air (derate at 90°C/W above 25°C) soldered to PC board (derate at 1.39W). Constructed with a special copper lead frame, this package is recommended for medium size commercial systems particularly where automatic insertion is used. (Please note for prototype work, that this package is only rated at 600 mW when mounted in a socket and not one watt until it is soldered down.)

To TO-8 ("G") package is rated at 1.5W still air (derate at 100°C/W above 25°C) and 2.3W with clip-on heat sink (Wakefield type 215-1.9 or equivalent-derate at 15 mW/°C). Selected for its power handling capability and moderate cost, this hermetic package will drive very large systems at the lowest cost per bit.

Additional information is given in the section of this data book on Maximum Power Dissipation (page 2).

Power Dissipation Considerations

The amount of registers that can be driven by a given clock driver is usually limited first by internal power dissipation. There are four factors:

1. Package and heat sink selection
2. Average dc power, P_{DC}
3. Average ac power, P_{AC}
4. Numbers of drivers per package, n

From the package heat sink, and maximum ambient temperature one can determine P_{MAX}, which is the maximum internal power a device can handle and still operate reliably. The total average power dissipated in a driver is the sum of dc power and ac power in each driver times the number of drivers. The total of which must be less than the package power rating.

$$P_{DISS} = n \times (P_{AC} + P_{DC}) \leq P_{MAX} \qquad (1)$$

Average dc power has three components: input power, power in the "OFF" state (MOS logic "0") and power in the "ON" state (MOS logic "1").

$$P_{DC} = P_{IN} + P_{OFF} + P_{ON} \qquad (2)$$

For most types of clock drivers, the first two terms are negligible (less than 10 mW) and may be ignored.

Thus:

$$P_{DC} \cong P_{ON} = \frac{(V^+ - V^-)^2}{Req} \times (DC)$$

where:

$V^+ - V^-$ = Total voltage across the driver

Req = Equivalent device resistance in the "ON" state

$$= V^+ - V^- / I_{S(ON)} \qquad (3)$$

DC = Duty Cycle

$$= \frac{\text{"ON" Time}}{\text{"ON" Time + "OFF" Time}}$$

For the DS0025, Req is typically 1 kΩ while Req is typically 600Ω for the DS0026. Graphical solutions for P_{DC} appear in *Figure 1*. For example if $V^+ = +5V$, $V^- = -12V$, Req = 500 Ω, and DC = 25%, then P_{DC} = 145 mW. However, if the duty cycle was only 5%, P_{DC} = 29 mW. Thus to maximize the number of registers that can be driven by a given clock driver as well as minimizing average system power, the minimum allowable clock pulse width should be used for the particular type of MOS register.

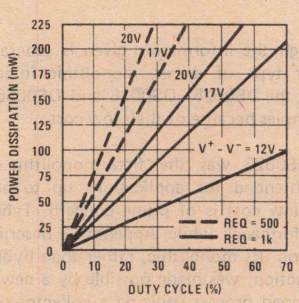

FIGURE 1. P_{DC} vs Duty Cycle

In addition to P_{DC}, the power driving a capacitive load is given approximately by:

$$P_{AC} = (V^+ - V^-)^2 \times f \times C_L \qquad (4)$$

where:

f = Operating frequency

C_L = Load capacitance

Graphical solutions for P_{AC} are illustrated in *Figure 2*. Thus, any type of clock driver will dissipate internally 290 mW per MHz per thousand pF of load. At 5 MHz, this would be 1.5W for a 1000 pF load. For long shift register applications, the driver with the highest package power rating will drive the largest number of bits.

Combining equations (1), (2), (3) and (4) yields a criterion for the maximum load capacitance which can be driven by a given driver:

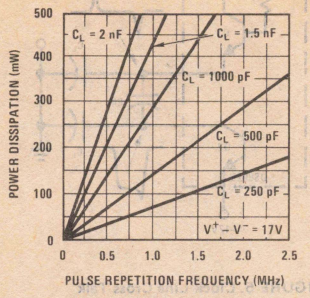

FIGURE 2. P_{AC} vs PRF

$$C_L \leq \frac{1}{f}\left[\frac{P_{MAX}}{n\,(V^+ - V^-)^2} - \frac{(DC)}{Req}\right] \qquad (5)$$

As an example, the DS0025CN can dissipate 890 mW at T_A = 70°C when soldered to a printed circuit board. Req is approximately equal to 1k. For V^+ = 5V, V^- = −12V, f = 1 MHz, and dc = 20%, C_L is:

$$C_L \leq \frac{1}{10^6}\left[\frac{(890 \times 10^{-3})}{(2)\,(17)^2} - \frac{0.2}{1 \times 10^3}\right]$$

$$C_L \leq 1340 \text{ pF (each driver)}$$

A typical application might involve driving an MM5013 triple 64-bit shift register with the DS0025. Using the conditions above and the clock line capacitance of the MM5013 of 60 pF, a single DS0025 can drive 1340 pF/60 pF, or 00 MM5013's.

In summary, the maximum capacitive load that any clock driver can drive is determined by package type and rating, heat sink technique, maximum system ambient temperature, ac power (which depends on frequency, voltage across the device, and capacitive load) and dc power (which is principally determined by duty cycle).

Rise and Fall Time Considerations

In general rise and fall times are determined by (a) clock driver design, (b) reflected effects of heavy external load, and (C) peak transient current available. Details of these are included in Appendixes I and II. *Figures AI-3, AI-4, AII-2 and AIII-3* illustrate performance under various operating conditions. Under light loads, performance is determined by internal design of the driver; for moderate loads, by load C_L being reflected (usually as $C_{L/\beta}$) into the driver, and for large loads by peak output current where:

$$\frac{\Delta V}{\Delta T} = \frac{I_{OUT\ PEAK}}{C_L}$$

Logic rise and fall times must be known in order to assure non-overlap of system timing.

Note the definition of rise and fall times in this application note follow the convention that rise time is the transition from logic "0" to logic "1" levels and vice versa for fall times. Since MOS logic is inverted from normal TTL, "rise time" as used in this note is "voltage fall" and "fall time" is "voltage rise."

Power Supply Decoupling

Although power supply decoupling is a wide spread and accepted practice, the question often arises as to how much and how often. Our own experience indicates that each clock driver should have at least 0.1μF decoupling to ground at the V^+ and V^- supply leads. Capacitors should be located as close as is physically possible to each driver. Capacitors should be non-inductive ceramic discs. This decoupling is necessary because currents in the order of 0.5 to 1.5 amperes flow during logic transitions.

There is a high current transient (as high as 1.5A) during the output transition from high to low through the V^- lead. If the external interconnecting wire from the driving circuit to the V^- lead is electrically long, or has significant dc resistance the current transient will appear as negative feedback and subtract from the switching response. To minimize this effect, short interconnecting wires are necessary and high frequency power supply decoupling capacitors are required if V^- is different from the ground of the driving circuit.

Clock Line Overshoot and Cross Talk

Overshoot: The output waveform of a clock driver can, and often does, overshoot. It is particularly evident on faster drivers. The overshoot is due to the finite inductance of the clock lines. Since most MOS registers require that clock signals not exceed V_{SS}, some method must be found in large systems to eliminate overshoot. A straightforward approach is shown in *Figure 3.* In this instance,

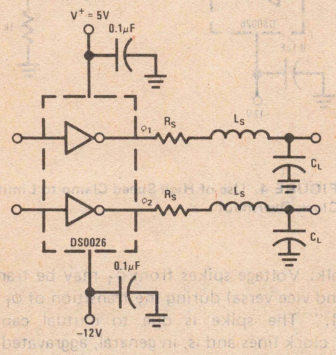

FIGURE 3. Use of Damping Resistor to Eliminate Clock Overshoot

a small damping resistor is inserted between the output of the clock driver and the load. The critical value for R_S is given by:

$$R_S = 2\sqrt{\frac{L_S}{C_L}} \qquad (6)$$

In practice, analytical determination of the value for R_S is rather difficult. However, R_S is readily determined empirically, and typical values range in value between 10 and 50Ω.

Use of the damping resistor has the added benefit of essentially unloading the clock driver; hence a greater number of loads may often be driven by a given driver. In the limit, however, the maximum value that may be used for R_S will be determined by the maximum allowable rise and fall time needed to assure proper operation of the MOS register. In short:

$$t_{r(MAX)} = t_{f(MAX)} \leq 2.2\, R_S C_L \qquad (7)$$

One last word of caution with regard to use of a damping resistor should be mentioned. The power dissipated in R_S can approach $(V^+ - V^-)^2 f C_L$ and accordingly the resistor wattage rating may be in excess of 1W. There are, obviously, applications where degradation of t_r and t_f by use of damping resistors cannot be tolerated. *Figure 4* shows a practical circuit which will limit overshoot to a diode drop. The clamp network should physically be located in the center of the distributed load in order to minimize inductance between the clamp and registers.

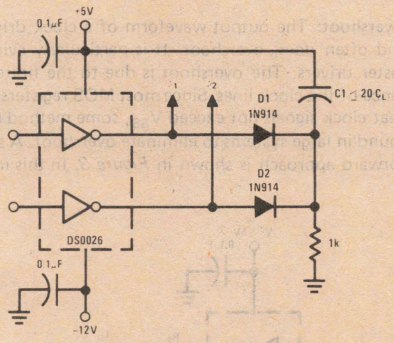

FIGURE 4. Use of High Speed Clamp to Limit Clock Overshoot

Cross Talk: Voltage spikes from ϕ_1 may be transmitted to ϕ_2 (and vice versa) during the transition of ϕ_1 to MOS logic "1." The spike is due to mutual capacitance between clock lines and is, in general, aggravated by long clock lines when numerous registers are being driven. *Figure 5* illustrates the problem.

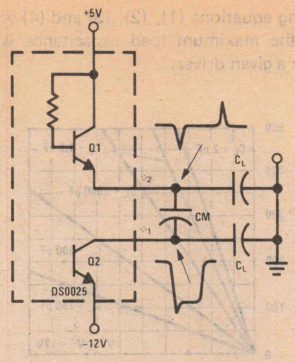

FIGURE 5. Clock Line Cross Talk

The negative going transition of ϕ_1 (to MOS logic "1") is capacitively coupled via C_M to ϕ_2. Obviously, the larger C_M is, the larger the spike. Prior to ϕ_1's transition, Q1 is "OFF" since only μA are drawn from the device.

The DS0056 connected as shown in *Figure 6* will minimize the effect of cross talk. The external resistors to the higher power supply pull the base of a Q1 up to a higher level and forward bias the collector base junction of Q1. In this bias condition the output impedance of the DS0056 is very low and will reduce the amplitude of the spikes.

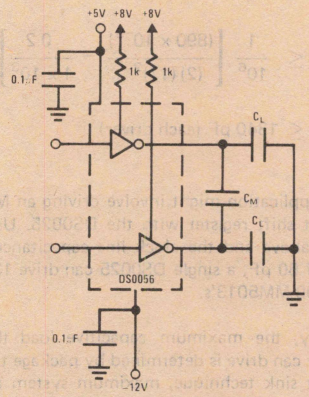

FIGURE 6. Use of DS0056 to Minimize Clock Line Cross Talk

Input Capacitive Coupling

Generally, MOS shift registers are powered from +5V and −12V supplies. A level shift from the TTL levels (+5V) to MOS levels (−12V) is therefore required. The level shift could be made utilizing a PNP transistor or zener diode. The disadvantage to dc level shifting is the increased power dissipation and propagation delay in the level shifting device. Both the DS0025, DS0026 and DS0056 utilize input capacitors when level shifting from

TTL to negative MOS capacitors. Not only do the capacitors perform the level shift function without inherent delay and power dissipation, but as will be shown later, the capacitors also enhance the performance of these circuits.

CONCLUSION

The practical aspects of driving MOS memories with low cost clock drivers has been discussed in detail. When the design guide lines set forth in this paper are followed and reasonable care is taken in circuit layout, the DS0025, DS0026 and DS0056 provide superior performance for most MOS input interface applications.

REFERENCES

1. Bert Mitchell, *"New MOS Clock Driver for MOS Shift Registers,"* National Semiconductor, AN-18, March 1969.
2. John Vennard, *"MOS Clock Drivers,"* National Semiconductor, MB-9, December 1969.
3. Dale Mrazek, *"MOS Delay Lines,"* National Semiconductor, AN-25, April 1969.
4. Dale Mrazek, *"MOS Clock Savers,"* National Semiconductor, MB-5.
5. Dale Mrazek, *"Silicon Disc's Challenge Magnetic Disc Memories,"* EDN/EEE Magazine, Sept. 1971.
6. Richard Percival, *"Dynamic MOS Shift Registers Can Also Simulate Stack and Silo Memories,"* Electronics Magazine, November 8, 1971.
7. Bapat and Mrazek, *"Dynamic MOS Random Access Memory System Considerations,"* National Semiconductor, AN-50, August 1971.
8. Don Femling, *"Using the MM5704 Keyboard Interface in Keyboard Systems,"* National Semiconductor, AN-52.

APPENDIX I

DS0025 Circuit Operation

The schematic diagram of the DS0025 is shown in *Figure AI-1.* With the TTL driver in the logic "0" state Q1 is "OFF" and Q2 is "ON" and the output is at approximately one V_{BE} below the V^+ supply.

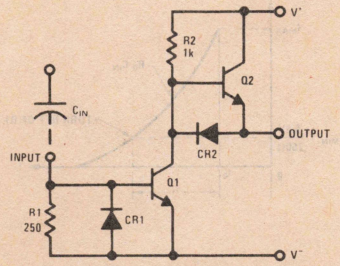

FIGURE AI-1. DS0026 Schematic (One-Half Circuit)

When the output of the TTL driver goes high, current is supplied to the base of Q1, through C_{IN}, turning it "ON." As the collector of Q1 goes negative, Q2 turns "OFF." Diode CR2 assures turn-on of Q1 prior to Q2's turn-off minimizing current spiking on the V^+ line, as well as providing a low impedance path around Q2's base emitter junction.

The negative voltage transition (to MOS logic "1") will be quite linear since the capacitive load will force Q1 into its linear region until the load is discharged and Q1 saturates. Turn-off begins when the input current decays to zero or the output of the TTL driver goes low. Q1 turns "OFF" and Q2 turns "ON" charging the load to within a V_{BE} of the V^+ supply.

Rise Time Considerations

The logic rise time (voltage fall) of the DS0025 is primarily a function of the ac load, C_L, the available input current and total voltage swing. As shown in *Figure AI-2,*

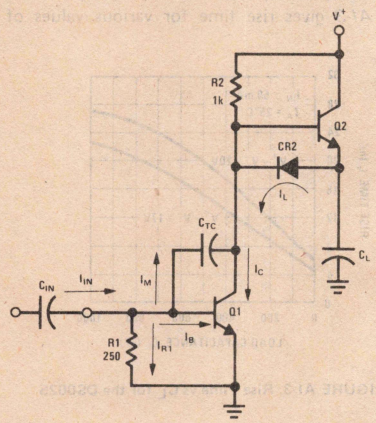

FIGURE AI-2. Rise Time Model for the DS0025

the input current must charge the Miller capacitance of Q1, C_{TC}, as well as supply sufficient base drive to Q1 to discharge C_L rapidly. By inspection:

$$I_{IN} = I_M + I_B + I_{R1} \qquad \text{(AI-1)}$$

$$I_{IN} \cong I_M + I_B, \text{ for } I_M >> I_{R1} \ \& \ I_B >> I_{R1}$$

$$I_B = I_{IN} - C_{TC}\frac{\Delta V}{\Delta t} \qquad \text{(AI-2)}$$

If the current through R2 is ignored,

$$I_C = I_B h_{FEQ1} = I_L + I_M \qquad \text{(AI-3)}$$

where:

$$I_L = C_L \frac{\Delta V}{\Delta t}$$

Combining equations AI-1, AI-2, AI-3 yields:

$$\frac{\Delta V}{\Delta t}[C_L + C_{TC}(h_{FEQ1} + 1)] = h_{FEQ1} I_{IN} \qquad \text{(AI-4)}$$

or

$$t_r \cong \frac{[C_L + (h_{FEQ1} + 1)C_{TC}]\ \Delta V}{h_{FEQ1}\ I_{IN}} \qquad \text{(AI-5)}$$

Equation (AI-5) may be used to predict t_r as a function of C_L and ΔV. Values for C_{TC} and h_{FE} are 10 pF and 25 respectively. For example, if a DM7440 with peak output current of 50 mA were used to drive a DS0025 loaded with 1000 pF, rise times of:

$$\frac{(1000\text{ pF} + 250\text{ pF})\ (17\text{V})}{(50\text{ mA})\ (20)}$$

or 21 ns may be expected for $V^+ = 5.0\text{V}$, $V^- = -12\text{V}$, *Figure AI-3* gives rise time for various values of C_L.

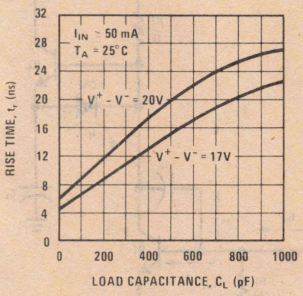

FIGURE AI-3. Rise Time vs C_L for the DS0025

Fall Time Considerations

The MOS logic fall time (voltage rise) of the DS0025 is dictated by the load, C_L, and the output capacitance of Q1. The fall time equivalent circuit of DS0025 may be approximated with the circuit of *Figure AI-4*. In actual

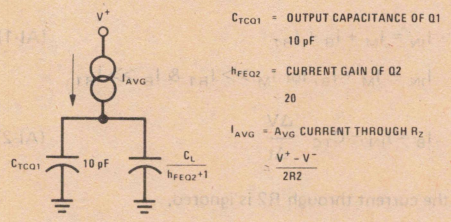

FIGURE AI-4. Fall Time Equivalent Circuit

practice, the base drive to Q2 drops as the output voltage rises toward V^+. A rounding of the waveform occurs as the output voltage reaches to within a volt of V^+. The result is that equation (AI-7) predicts conservative values of t_f for the output voltage at the beginning of the voltage rise and optimistic values at the end. *Figure AI-5* shows t_f as function of C_L.

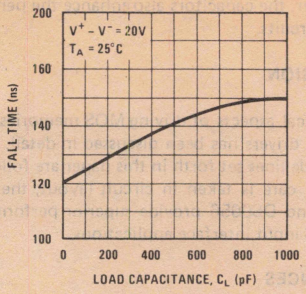

FIGURE AI-5. DS0025 Fall Time vs C_L

Assuming h_{FE2} is a constant of the total transition:

$$\frac{\Delta V}{\Delta t} = \frac{\left(\frac{V^+ - V^-}{2R2}\right)}{C_{TCQ1} + C_L/h_{FEQ1+1}} \qquad \text{(AI-6)}$$

or

$$t_f \cong 2R2\left(C_{TCQ1} + \frac{C_L}{h_{FEQ+1}}\right) \qquad \text{(AI-7)}$$

DS0025 Input Drive Requirements

Since the DS0025 is generally capacitively coupled at the input, the device is sensitive to current not input voltage. The current required by the input is in the 50–60 mA region. It is therefore a good idea to drive the DS0025 from TTL line drivers, such as the DM7440 or DM8830. It is possible to drive the DS0025 from standard 54/74 series gates or flip-flops but t_{ON} and t_r will be somewhat degraded.

Input Capacitor Selection

The DS0025 may be operated in either the logically controlled mode (pulse width out ≅ pulse width in) or C_{IN} may be used to set the output pulse width. In the latter mode a long pulse is supplied to the DS0025.

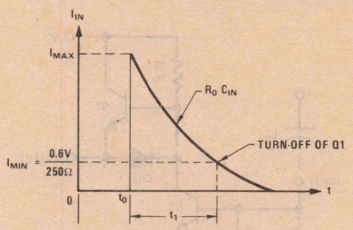

FIGURE AI-6. DS0025 Input Current Waveform

The input current is of the general shape as shown in *Figure AI-6*. I_{MAX} is the peak current delivered by the TTL driver into a short circuit (typically 50–60 mA). Q1 will begin to turn-off when I_{IN} decays below V_{BE}/R1 or about 2.5 mA. In general:

$$I_{IN} = I_{MAX}\, e^{-t/RO}\, C_{IN} \qquad \text{(AI-8)}$$

where:

RO = Output impedance of the TTL driver

C_{IN} = Input coupling capacitor

Substituting $I_{IN} = I_{MIN} = \frac{V_{BE}}{R1}$ and solving for t_1 yields:

$$t_1 = ROC_{IN} \ln \frac{I_{MAX}}{I_{MIN}} \qquad \text{(AI-9)}$$

The total pulse width must include rise and fall time considerations. Therefore, the total expression for pulse width becomes:

$$t_{PW} \cong \frac{t_r + t_f}{2} + t_1$$

$$= \frac{t_r + t_f}{2} + ROC_{IN} \ln \frac{I_{MAX}}{I_{MIN}} \qquad \text{(AI-10)}$$

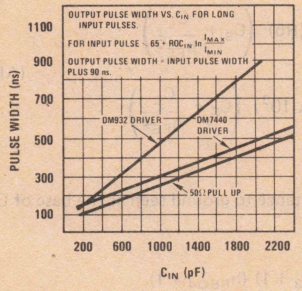

FIGURE AI-7. Output PW Controlled by C_{IN}

The logic "1" output impedance of the DM7440 is approximately 65Ω and the peak current (I_{MAX}) is about 50 mA. The pulse width for C_{IN} = 2,200 pF is:

$$t_{PW} \cong \frac{25\text{ ns} + 150\text{ ns}}{2} + (65\Omega)(2200\text{ pF})\ln$$

$$\frac{50\text{ mA}}{2.5\text{ mA}} = 517\text{ ns}$$

A plot of pulse width for various types of drivers is shown in *Figure AI-7*. For applications in which the output pulse width is logically controlled, C_{IN} should be chosen 2 to 3 times larger than the maximum pulse width dictated by equation (AI-10).

DC Coupled Operation

The DS0025 may be direct-coupled in applications when level shifting to a positive value only. For example, the MM1103 RAM typically operates between ground and +20V. The DS0025 is shown in *Figure AI-8* driving the addres or precharge line in the logically controlled mode.

If DC operation to a negative level is desired, a level translator such as the DS7800 or DS0034 may be employed as shown in *Figure AI-9*. Finally, the level shift may be accomplished using PNP transistors are shown in *Figure AI-10*.

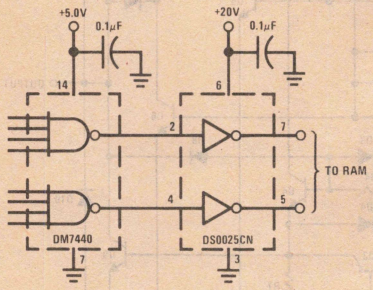

FIGURE AI-8. DC Coupled DS0025 Driving 1103 RAM

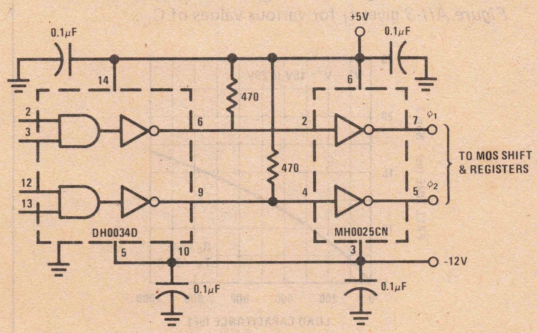

FIGURE AI-9. DC Coupled Clock Driver Using DS0034

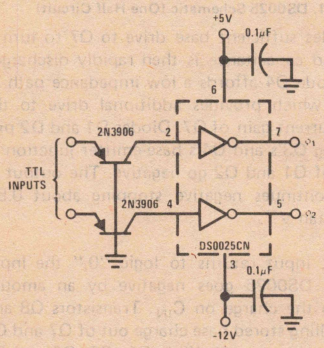

FIGURE AI-10. Transistor Coupled DS0025 Clock Driver

APPENDIX II

DS0026 Circuit Operation

The schematic of the DS0026 is shown in *Figure AII-1*. The device is typically ac coupled on the input and responds to input current as does the DS0025. Internal current gain allows the device to be driven by standard TTL gates and flip-flops.

With the TTL input in the low state Q1, Q2, Q5, Q6 and Q7 are "OFF" allowing Q3 and Q4 to come "ON." R6 assures that the output will pull up to within a V_{BE} of V^+ volts. When the TTL input starts toward logic "1," current is supplied via C_{IN} to the bases of Q1 and Q2 turning them "ON." Simultaneously, Q3 and Q4 are snapped "OFF." As the input voltage rises (to about 1.2V), Q5 and Q6 turn-on. Multiple emitter transistor Q5 provides additional base drive to Q1 and Q2 assuring their complete and rapid turn-on. Since Q3 and Q4 were rapidly turned "OFF" minimal power supply current spiking will occur when Q7 comes "ON."

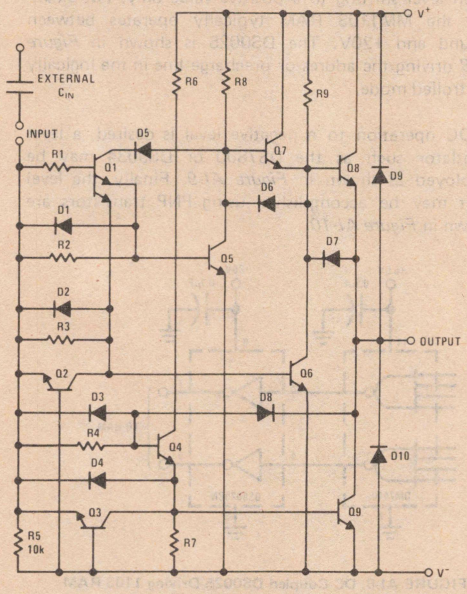

FIGURE AII-1. DS0025 Schematic (One-Half Circuit)

Q6 now provides sufficient base drive to Q7 to turn it "ON." The load capacitance is then rapidly discharged toward V^-. Diode D4 affords a low impedance path to Q6's collector which provides additional drive to the load through current gain of Q7. Diodes D1 and D2 prevent avalanching Q3's and Q4's base-emitter junction as the collectors of Q1 and Q2 go negative. The output of the DS0026 continues negative stopping about 0.5V more positive than V^-.

When the TTL input returns to logic "0," the input voltage to the DS0026 goes negative by an amount proportional to the charge on C_{IN}. Transistors Q8 and Q9 turn-on, pulling stored base charge out of Q7 and Q2 assuring their rapid turn-off. With Q1, Q2, Q6 and Q7 "OFF," Darlington connected Q3 and Q4 turn-on and rapidly charge the load to within a V_{BE} of V^+.

Rise Time Considerations

Predicting the MOS logic rise time (voltage fall) of the DS0026 is considerably involved, but a reasonable approximation may be made by utilizing equation (AI-5), which reduces to:

$$t_r \cong [C_L + 250 \times 10^{-12}]\ \Delta V \qquad \text{(AII-1)}$$

For C_L = 1000 pF, V^+ = 5.0V, V^- = −12V, $t_r \cong$ 21 ns. *Figure AII-2* shows DS0026 rise times vs C_L.

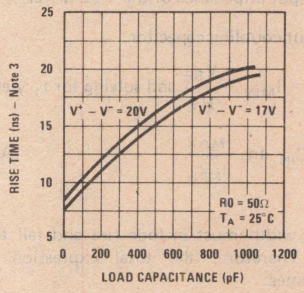

FIGURE AII-2. Rise Time vs Load Capacitance

Fall Time Considerations

The MOS logic fall time of the DS0026 is determined primarily by the capacitance Miller capacitance of Q5 and Q1 and R5. The fall time may be predicted by:

$$t_f \cong (2.2)(R5)\left(C_S + \frac{C_L}{h_{FE}^2}\right)$$

$$\cong (4.4 \times 10^3)\left(C_S + \frac{C_L}{h_{FE}^2}\right) \qquad \text{(AII-2)}$$

where:

C_S = Capacitance to ground seen at the base of Q3

= 2 pF

$h_{FE}^2 = (h_{FEQ3} + 1)\ (h_{FEQ4} + 1)$

$\cong$ 500

For the values given and C_L = 1000 pF, $t_f \cong$ 17.5 ns. *Figure AII-3* gives t_f for various values of C_L.

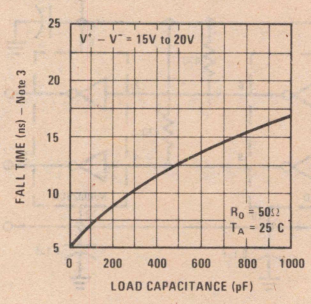

FIGURE AII-3. Fall Time vs Load Capacitance

DS0026 Input Drive Requirements

The DS0026 was designed to be driven by standard 54/74 elements. The device's input characteristics are shown in *Figure AII-4*. There is breakpoint at $V_{IN} \cong$ 0.6V which corresponds to turn-on of Q1 and Q2. The input current then rises with a slope of about 600Ω (R2 ‖ R3) until a second breakpoint at approximately 1.2V is encountered, corresponding to the turn-on of Q5 and Q6. The slope at this point is about 150Ω (R1 ‖ R2 ‖ R3 ‖ R4).

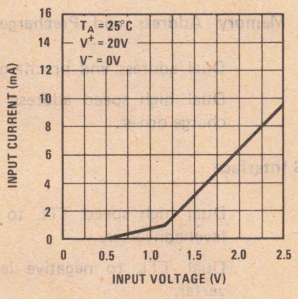

FIGURE AII-4. Input Current vs Input Voltage

The current demanded by the input is in the 5–10 mA region. A standard 54/74 gate can source currents in excess of 20 mA into 1.2V. Obviously, the minimum "1" output voltage of 2.5V under these conditions cannot be maintained. This means that a 54/74 element must be dedicated to driving 1/2 of a DS0026. As far as the DS0026 is concerned, the current is the determining turn-on mechanism not the voltage output level of the 54/74 gate.

Input Capacitor Selection

A major difference between the DS0025 and DS0026 is that the DS0026 requires that the output pulse width be logically controlled. In short, the input pulse width ≅ output pulse width. Selection of C_{IN} boils down to choosing a capacitor small enough to assure the capacitor takes on nearly full charge, but large enough so that the input current does not drop below a minimum level to keep the DS0026 "ON." As before:

$$t_1 = R0C_{IN} \ln \frac{I_{MAX}}{I_{MIN}} \qquad \text{(AII-3)}$$

or

$$C_{IN} = \frac{t_1}{R0 \ln \frac{I_{MAX}}{I_{MIN}}} \qquad \text{(AII-4)}$$

In this case R0 equals the sum of the TTL gate output impedance plus the input impedance of the DS0026 (about 150Ω). I_{MIN} from *Figure AII-5* is about 1 mA. A standard 54/74 series gate has a high state output impedance of about 150Ω in the logic "1" state and an output (short circuit) current of about 20 mA into 1.2V. For an output pulse width of 500 ns,

$$C_{IN} = \frac{500 \times 10^{-9}}{(150\Omega + 150\Omega) \ln \frac{20\text{ mA}}{1\text{ mA}}} = 560\text{ pF}$$

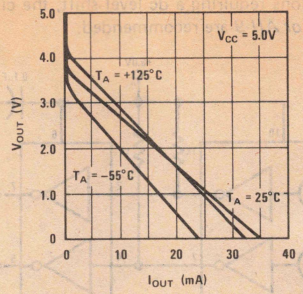

FIGURE AII-5. Logical "1" Output Voltage vs Source Current

In actual practice it's a good idea to use values of about twice those predicted by equation (AII-4) in order to account for manufacturing tolerances in the gate, DS0026 and temperature variations.

A plot of optimum value for C_{IN} vs desired output pulse width is shown in *Figure AII-6*.

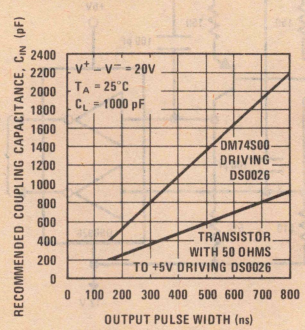

FIGURE AII-6. Suggested Input Capacitance vs Output Pulse Width

DC Coupled Applications

The DS0026 may be applied in direct coupled applications. *Figure AII-7* shows the device driving address or pre-charge lines on an MM1103 RAM.

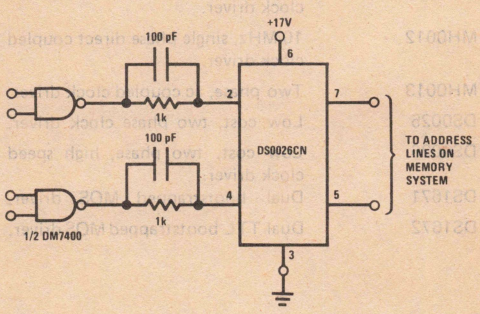

FIGURE AII-7. DC Coupled RAM Memory Address or Precharge Driver (Positive Supply Only)

For applications requiring a dc level shift, the circuit of *Figure AII-8 or AII-9* are recommended.

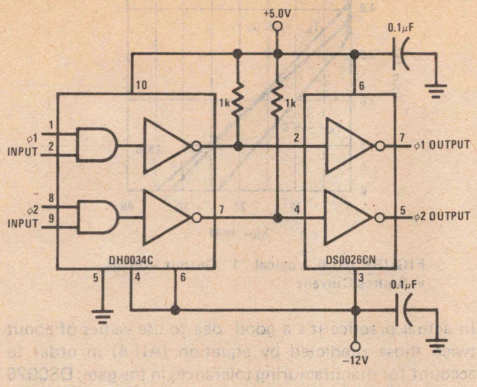

FIGURE AII-8. Transistor Coupled MOS Clock Driver

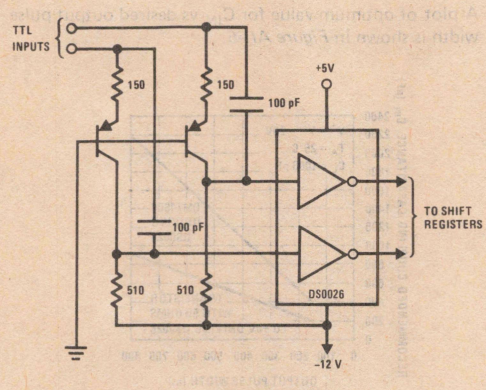

FIGURE AII-9. DC Coupled MOS Clock Driver

APPENDIX III

MOS Interface Circuits

MOS Clock Drivers

MH0007	Direct coupled, single phase, TTL compatible clock driver.
MH0009	Two phase, direct or ac coupled clock driver.
MH0012	10 MHz, single phase direct coupled clock driver.
MH0013	Two phase, ac coupled clock driver.
DS0025	Low cost, two phase clock driver.
DS0026	Low cost, two phase, high speed clock driver.
DS1671	Dual bootstrapped MOS driver.
DS1672	Dual TTL bootstrapped MOS driver.
DS1673	Quad decoded MOS clock driver.
DS1674	Quad MOS clock driver.
DS75361	Dual TTL-to-MOS driver.
DS75365	Quad TTL-to-MOS driver.

MOS Oscillator/Clock Drivers

DS7803/DS7807, DS7813/DS7817	Complete two phase clock system for MOS microprocessors and calculators.

MOS RAM Memory Address and Precharge Drivers

DS0025	Dual address and precharge driver.
DS0026	Dual high speed address and precharge driver.

TTL to MOS Interface

DH0034	Dual high speed TTL to negative level converter.
DS7800	Dual TTL to negative level converter.
DM7810/DM7812/ DM7819	Open collector TTL to positive high level MOS converter gates.
DM78L12	Active pull-up TTL to positive high level MOS converter gates.
DS1640/DS1670	Quad MOS TRI-SHARE™ driver.
DS1645/DS1675	Hex TRI-STATE® MOS driver.
DS1646/DS1676	6-bit TRI-STATE MOS driver refresh counter.
DS1647/DS1677	Quad TRI-STATE MOS driver I/O register.
DS1648/DS1678	TRI-STATE MOS driver multiplexer.
DS1649/DS1679	Hex TRI-STATE MOS driver.
DS16149/DS16179	Hex TRI-STATE MOS driver.

MOS to TTL Converters and Sense Amps

DS7802, DS7806*	Dual sense amp for MM5262 2k MOS RAM memory.
DS165 Series*	Hex sense amp MOS to TTL.
DS163, DS75107, DS75207*	Dual sense amp for MM1103 1k MOS RAM memory.

Voltage Regulators for MOS Systems

LM109, LM140 Series	Positive regulators.
LM120 Series	Negative regulators.
LM125 Series*	Dual +/− regulators.

*To be announced

Specifying A/D and D/A Converters

National Semiconductor
Application Note 156
Jim Sherwin
February 1976

The specification or selection of analog-to-digital (A/D) or digital-to-analog (D/A) converters can be a chancey thing unless the specifications are understood by the person making the selection. Of course, you know you want an accurate converter of specific resolution; but how do you insure that you get what you want? For example, 12 switches, 12 arbitrarily valued resistors, and a reference will produce a 12-bit DAC exhibiting 12 quantum steps of output voltage. In all probability, the user wants something better than the expected performance of such a DAC. Specifying a 12-bit DAC or an ADC must be made with a full understanding of accuracy, linearity, differential linearity, monotonicity, scale, gain, offset, and hysteresis errors.

This note explains the meanings of and the relationships between the various specifications encountered in A/D and D/A converter descriptions. It is intended that the meanings be presented in the simplest and clearest practical terms. Included are transfer curves showing the several types of errors discussed. Timing and control signals and several binary codes are described as they relate to A/D and D/A converters.

MEANING OF PERFORMANCE SPECS

Resolution describes the smallest standard incremental change in output voltage of a DAC or the amount of input voltage change required to increment the output of an ADC between one code change and the next adjacent code change. A converter with n switches can resolve 1 part in 2^n. The least significant increment is then 2^{-n}, or one least significant bit (LSB). In contrast, the most significant bit (MSB) carries a weight of 2^{-1}. Resolution applies to DACs and ADCs, and may be expressed in percent of full scale or in binary bits. For example, an ADC with 12-bit resolution could resolve 1 part in 2^{12} (1 part in 4096) or 0.0245% of full scale. A converter with 10V full scale could resolve a 2.45mV input change. Likewise, a 12-bit DAC would exhibit an output voltage change of 0.0245% of full scale when the binary input code is incremented one binary bit (1 LSB). Resolution is a design parameter rather than a performance specification; it says nothing about accuracy or linearity.

Accuracy is sometimes considered to be a non-specific term when applied to D/A or A/D converters. A linearity spec is generally considered as more descriptive. An accuracy specification describes the worst case deviation of the DAC output voltage from a straight line drawn between zero and full scale; it includes all errors. A 12-bit DAC could not have a conversion accuracy better than ±½ LSB or ±1 part in 2^{12+1} (±0.0122% of full scale due to finite resolution). This would be the case in figure 1 if there were no errors. Actually, ±0.0122% FS represents a deviation from 100% accuracy; therefore accuracy should be specified as 99.9878%. However, convention would dictate 0.0122% as being an accuracy spec rather than an inaccuracy (tolerance or error) spec.

Accuracy as applied to an ADC would describe the difference between the actual input voltage and the full-scale weighted equivalent of the binary output code; included are quantizing and all other errors. If a 12-bit ADC is stated to be ±1 LSB accurate, this is equivalent to ±0.0245% or twice the minimum possible quantizing error of 0.0122%. An accuracy spec describes the maximum sum of all errors including quantizing error, but is rarely provided on data sheets as the several errors are listed separately.

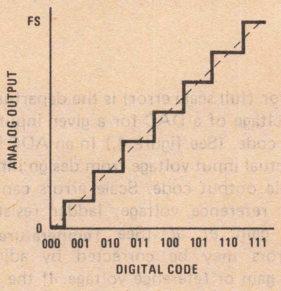

FIGURE 1. Linear DAC Transfer Curve Showing Minimum Resolution Error and Best Possible Accuracy

Quantizing Error is the maximum deviation from a straight line transfer function of a perfect ADC. As, by its very nature, an ADC quantizes the analog input into a finite number of output codes, only an infinite resolution ADC would exhibit zero quantizing error. A perfect ADC, suitably offset ½ LSB at zero scale as shown in figure 2, exhibits only ±½ LSB maximum output error. If not offset, the error will be $^{+1}_{-0}$ LSB as shown in figure 3. For example, a perfect 12-bit ADC will show a ±½ LSB error of ±0.0122% while the quantizing error of an 8-bit ADC is ±½ part in 2^8 or ±0.195% of full scale. Quantizing error is not strictly applicable to a DAC; the equivalent effect is more properly a resolution error.

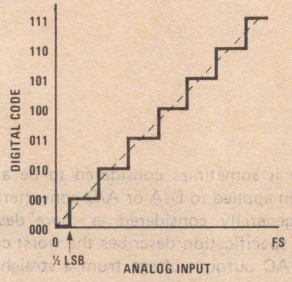

FIGURE 2. ADC Transfer Curve, ½ LSB Offset at Zero

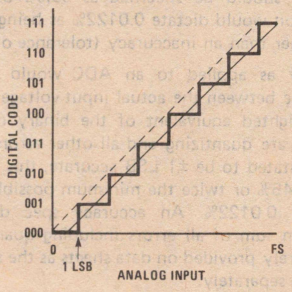

FIGURE 3. ADC Transfer Curve, No Offset

Scale Error (full scale error) is the departure from design output voltage of a DAC for a given input code, usually full-scale code. (See figure 4.) In an ADC it is the departure of actual input voltage from design input voltage for a full-scale output code. Scale errors can be caused by errors in reference voltage, ladder resistor values, or amplifier gain, *et. al.* (See **Temperature Coefficient**.) Scale errors may be corrected by adjusting output amplifier gain or reference voltage. If the transfer curve resembles that of figure 7, a scale adjustment at ¾ scale could improve the overall ± accuracy compared to an adjustment at full scale.

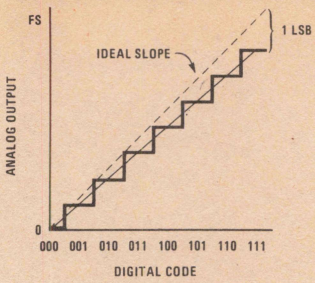

FIGURE 4. Linear, 1 LSB Scale Error

Gain Error is essentially the same as scale error for an ADC. In the case of a DAC with current and voltage mode outputs, the current output could be to scale while the voltage output could exhibit a gain error. The amplifier feedback resistors would be trimmed to correct the gain error.

Offset Error (zero error) is the output voltage of a DAC with zero code input, or it is the required mean value of input voltage of an ADC to set zero code out. (See figure 5.) Offset error is usually caused by amplifier or comparator input offset voltage or current; it can usually be trimmed to zero with an offset zero adjust potentiometer external to the DAC or ADC. Offset error may be expressed in % FS or in fractional LSB.

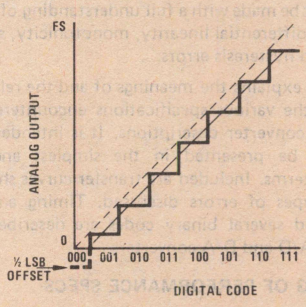

FIGURE 5. Linear, ½ LSB Offset Error

Hysteresis Error in an ADC causes the voltage at which a code transition occurs to be dependent upon the direction from which the transition is approached. This is usually caused by hysteresis in the comparator inside an ADC. Excessive hysteresis may be reduced by design; however, some slight hysteresis is inevitable and may be objectionable in converters if hysteresis approaches ½ LSB.

Linearity, or, more accurately, non-linearity specifications describe the departure from a linear transfer curve for either an ADC or a DAC. Linearity error does not include quantizing, zero, or scale errors. Thus, a specifi-

cation of ±½ LSB linearity implies error in addition to the inherent ±½ LSB quantizing or resolution error. In reference to figure 2, showing no errors other than quantizing error, a linearity error allows for one or more of the steps being greater or less than the ideal shown.

Figure 6 shows a 3-bit DAC transfer curve with no more than ±½ LSB non-linearity, yet one step shown is of zero amplitude. This is within the specification, as the maximum deviation from the ideal straight line is ±1 LSB (½ LSB resolution error plus ½ LSB non-linearity). With any linearity error, there is a differential non-linearity (see below). A ±½ LSB linearity spec guarantees monotonicity (see below) and ⩽ ±1 LSB differential non-linearity (see below). In the example of figure 6, the code transition from 100 to 101 is the worst possible non-linearity, being the transition from 1 LSB high at code 100 to 1 LSB low at 110. Any fractional non-linearity beyond ±½ LSB will allow for a non-monotonic transfer curve. Figure 7 shows a typical non-linear curve; non-linearity is 1¼ LSB yet the curve is smooth and monotonic.

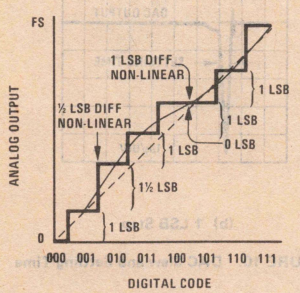

FIGURE 6. ±½ LSB Non-Linearity (Implies 1 LSB Possible Error), 1 LSB Differential Non-Linearity (Implies Monotonicity)

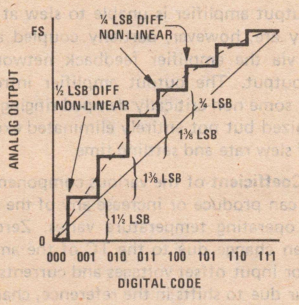

FIGURE 7. 1¼ LSB Non-Linear, ½ LSB Differential Non-Linearity

Linearity specs refer to either ADCs or to DACs, and do not include quantizing, gain, offset, or scale errors. Linearity errors are of prime importance along with differential linearity in either ADC or DAC specs, as all other errors (except quantizing, and temperature and long-term drifts) may be adjusted to zero. Linearity errors may be expressed in % FS or fractional LSB.

Differential Non-Linearity indicates the difference between actual analog voltage change and the ideal (1 LSB) voltage change at any code change of a DAC. For example, a DAC with a 1.5 LSB step at a code change would be said to exhibit ½ LSB differential non-linearity (see figures 6 and 7). Differential non-linearity may be expressed in fractional bits or in % FS.

Differential linearity specs are just as important as linearity specs because the apparent quality of a converter curve can be significantly affected by differential non-linearity even though the linearity spec is good. Figure 6 shows a curve with a ±½ LSB linearity and ±1 LSB differential non-linearity while figure 7 shows a curve with +1¼ LSB linearity and ±½ LSB differential non-linearity. In many user applications, the curve of figure 7 would be preferred over that of figure 6 because the curve is smoother. The differential non-linearity spec describes the smoothness of a curve; therefore it is of great importance to the user. A gross example of differential non-linearity is shown in figure 8 where the linearity spec is ±1 LSB and the differential linearity spec is ±2 LSB. The effect is to allow a transfer curve with grossly degraded resolution; the normal 8-step curve is reduced to 3 steps in figure 8. Similarly, a 16-step curve (4-bit converter) with only 2 LSB differential non-linearity could be reduced to 6 steps (a 2.6-bit converter?). The real message is, "Beware of the specs." Do not ignore or omit differential linearity characteristics on a converter unless the linearity spec is tight enough to guarantee the desired differential linearity. As this characteristic is impractical to measure on a production basis, it is rarely, if ever, specified, and linearity is the primary specified parameter. Differential non-linearity can always be as much as twice the non-linearity, but no more.

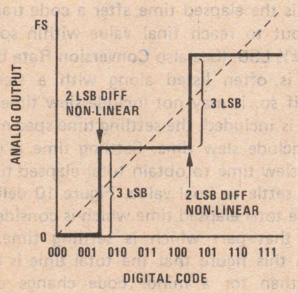

FIGURE 8. ±1 LSB Linear, ±2 LSB Differential Non-Linear

Monotonicity. A monotonic curve has no change in sign of the slope; thus all incremental elements of a monotonically increasing curve will have positive or zero, but never negative slope. The converse is true for decreasing curves. The transfer curve of a monotonic DAC will contain steps of only positive or zero height, and no negative steps. Thus a smooth line connecting all output voltage points will contain no peaks or dips. The transfer function of a monotonic ADC will provide no decreasing output code for increasing input voltage.

Figure 9 shows a non-monotonic DAC transfer curve. For the curve to be non-monotonic, the linearity error must exceed ±½ LSB no matter by how little. The greater the linearity error, the more significant the negative step might be. A non-monotonic curve may not be a special disadvantage in some systems; however, it is a disaster in closed-loop servo systems of any type (including a DAC-controlled ADC). A ±½ LSB maximum linearity spec on an n-bit converter guarantees monotonicity to n bits. A converter exhibiting more than ±½ LSB non-linearity may be monotonic, but is not necessarily monotonic. For example, a 12-bit DAC with ±½ bit linearity to 10 bits (not ±½ LSB) will be monotonic at 10 bits but may or may not be monotonic at 12 bits unless tested and guaranteed to be 12-bit monotonic.

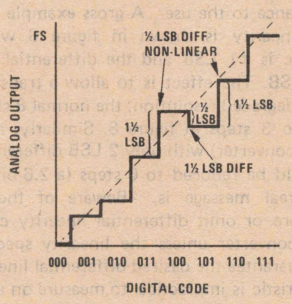

FIGURE 9. Non-Monotonic (Must be > ±½ LSB Non-Linear)

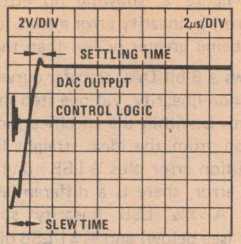

(a) Full-Scale Step

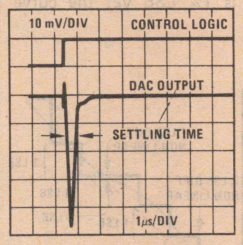

(b) 1 LSB Step

FIGURE 10. DAC Slew and Settling Time

Settling Time is the elapsed time after a code transition for DAC output to reach final value within specified limits, usually ±½ LSB. (See also **Conversion Rate** below.) Settling time is often listed along with a slew rate specification; if so, it may not include slew time. If no slew rate spec is included, the settling time spec must be expected to include slew time. Settling time is usually summed with slew time to obtain total elapsed time for the output to settle to final value. Figure 10 delineates that part of the total elapsed time which is considered to be slew and that part which is settling time. It is apparent from this figure that the total time is greater for a major than for a minor code change due to amplifier slew limitations, but settling time may also be different depending upon amplifier overload recovery characteristics.

Slew Rate is an inherent limitation of the output amplifier in a DAC which limits the rate of change of output voltage after code transitions. Slew rate is usually anywhere from 0.2 to several hundred volts/μs. Delay in reaching final value of DAC output voltage is the sum of slew time and settling time as shown in figure 10.

Overshoot and Glitches occur whenever a code transition occurs in a DAC. There are two causes. The current output of a DAC contains switching glitches due to possible asynchronous switching of the bit currents (expected to be worst at half-scale transition when all bits are switched). These glitches are normally of extremely short duration but could be of ½ scale amplitude. The current switching glitches are generally somewhat attenuated at the voltage output of the DAC because the output amplifier is unable to slew at a very high rate; they are, however, partially coupled around the amplifier via the amplifier feedback network and seen at the output. The output amplifier introduces overshoot and some non-critically damped ringing which may be minimized but not entirely eliminated except at the expense of slew rate and settling time.

Temperature Coefficient of the various components of a DAC or ADC can produce or increase any of the several errors as the operating temperature varies. Zero scale offset error can change due to the TC of the amplifier and comparator input offset voltages and currents. Scale error can occur due to shifts in the reference, changes in ladder resistance or non-compensating RC product shifts in dual-slope ADCs, changes in beta or reference current in current switches, changes in amplifier bias current, or drift in amplifier gain-set resistors. Linearity and monotonicity of the DAC can be affected by differential temperature drifts of the ladder resistors and switches. Overshoot, settling time, and slew rate can be affected by temperature due to internal change in amplifier gain and bandwidth. In short, every specification except resolution and quantizing error can be affected by temperature changes.

Long-Term Drift, due mainly to resistor and semiconductor aging can affect all those characteristics which temperature change can affect. Characteristics most commonly affected are linearity, monotonicity, scale, and offset. Scale change due to reference aging is usually the most important change.

Supply Rejection relates to the ability of a DAC or ADC to maintain scale, offset, TC, slew rate, and linearity when the supply voltage is varied. The reference must, of course, remain constant unless considering a multiplying DAC. Most affected are current sources (affecting linearity and scale) and amplifiers or comparators (affecting offset and slew rate). Supply rejection is usually specified only as a % FS change at or near full scale at 25°C.

Conversion Rate is the speed at which an ADC or DAC can make repetitive data conversions. It is affected by propagation delay in counting circuits, ladder switches and comparators; ladder RC and amplifier settling times; amplifier and comparator slew rates; and integrating time of dual-slope converters. Conversion rate is specified as a number of conversions per second, or conversion time is specified as a number of microseconds to complete one conversion (including the effects of settling time). Sometimes, conversion rate is specified for less than full resolution, thus showing a misleading (high) rate.

Clock Rate is the minimum or maximum pulse rate at which ADC counters may be driven. There is a fixed relationship between the minimum conversion rate and the clock rate depending upon the converter accuracy and type. All factors which affect conversion rate of an ADC limit the clock rate.

Input Impedance of an ADC describes the load placed on the analog source.

Output Drive Capability describes the digital load driving capability of an ADC or the analog load driving capacity of a DAC; it is usually given as a current level or a voltage output into a given load.

CODES

Several types of DAC input or ADC output codes are in common use. Each has its advantages depending upon the system interfacing the converter. Most codes are binary in form; each is described and compared below.

Natural Binary (or simply Binary) is the usual 2^n code with 2, 4, 8, 16, . . . , 2^n progression. An input or output high or "1" is considered a signal, whereas a "0" is considered an absence of signal. This is a positive true binary signal. Zero scale is then all "zeros" while full scale is all "ones."

Complementary Binary (or Inverted Binary) is the negative true binary system. It is identical to the binary code except that all binary bits are inverted. Thus, zero scale is all "ones" while full scale is all "zeros."

Binary Coded Decimal (BCD) is the representation of decimal numbers in binary form. It is useful in ADC systems intended to drive decimal displays. Its advantage over decimal is that only 4 lines are needed to represent 10 digits. The disadvantage of coding DACs or ADCs in BCD is that a full 4 bits could represent 16 digits while only 10 are represented in BCD. The full-scale resolution of a BCD coded system is less than that of a binary coded system. For example, a 12-bit BCD system has a resolution of only 1 part in 1000 compared to 1 part in 4096 for a binary system. This represents a loss in resolution of over 4:1.

Offset Binary is a natural binary code except that it is offset (usually ½ scale) in order to represent negative and positive values. Maximum negative scale is represented to be all "zeros" while maximum positive scale is represented as all "ones." Zero scale (actually center scale) is then represented as a leading "one" and all remaining "zeros." The comparison with binary is shown in figure 11.

Twos Complement Binary is an alternate and more widely used code to represent negative values. With this code, zero and positive values are represented as in natural binary while all negative values are represented in a twos complement form. That is, the twos complement of a number represents a negative value so that interface to a computer or microprocessor is simplified. The twos complement is formed by complementing each bit and then adding a 1; any overflow is neglected. The decimal number −8 is represented in twos complement as follows: start with binary code of decimal 8 (off scale for ± representation in 4 bits so not a valid code in the ± scale of 4 bits) which is 1000; complement it to 0111; add 0001 to get 1000. The comparison with offset binary is shown in figure 11. Note that the offset binary representation of the ± scale differs from the twos complement representation only in that the MSB is complemented. The conversion from offset binary to twos complement only requires that the MSB be inverted.

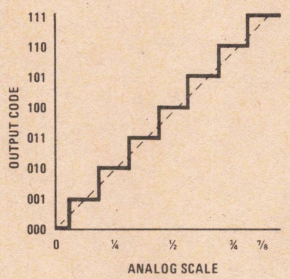

(a) Zero to + Full-Scale

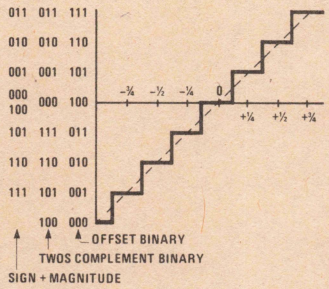

(b) ± Full-Scale

FIGURE 11. ADC Codes

Sign Plus Magnitude coding contains polarity information in the MSB (MSB = 1 indicates a negative sign); all other bits represent magnitude only. This code is compared to offset binary and twos complement in figure 11. Note that one code is used up in providing a double code for zero. Sign plus magnitude code is used in certain instrument and audio systems; its advantage is that only one bit need be changed for small scale changes in the vicinity of zero, and plus and minus scales are symmetrical. A DVM might be an example of its use.

CONTROL

Each ADC must accept and/or provide digital control signals telling it and/or the external system what to do and when to do it. Control signals should be compatible with one or more types of logic in common use. Control signal timing must be such that the converter or connected system will accept the signals. Common control signals are listed below.

Start Conversion (SC) is a digital signal to an ADC which initiates a single conversion cycle. Typically, an SC signal must be present at the fall (or rise) of the clock waveform to initiate the cycle. A DAC needs no SC signal; however, such could be provided to gate digital inputs to a DAC.

End of Conversion (EOC) is a digital signal from an ADC which informs the external system that the digital output data is valid. Typically, an EOC output can be connected to an SC input to cause the ADC to operate in continuous conversion mode. In non-continuous conversion systems, the SC signal is a command from the system to the ADC. A DAC does not supply an EOC signal.

Clock signals are required or must be generated within an ADC to control counting or successive approximation registers. The clock controls the conversion speed within the limitations of the ADC. DACs do not require clock signals.

CONCLUSION

Once the user has a working knowledge of DAC or ADC characteristics and specifications, he should be able to select a converter to suit a specific system need. The likelihood of overspecification, and therefore an unnecessarily high cost, is likewise reduced. The user will also be aware that specific parameters, test conditions, test circuits, and even definitions may vary from manufacturer to manufacturer. For practical production reasons, parameters may not be tested in the same manner for all converter types, even those supplied by the same manufacturer. Using information in this note, the user should, however, be able to sort out and understand those specifications (from any manufacturer) pertinent to his needs.

Data Acquisition System Interface to Computers

National Semiconductor
Application Note 159
Jim Sherwin
April 1976

INTRODUCTION

The need of interfacing several analog data channels to computers has not escaped the attention of the data system firms. There are presently available a number of data acquisition units (DAUs) which will directly interface 8-64 analog data channels to one or more types of computers or microcomputers, and more appear on the market almost monthly. Some of these DAUs are even constructed to plug into the mainframe of the computer for which they are designed. Nearly all of these commercially available DAUs are of more or less conventional design, operating in either a random channel address or sequential address mode. Figure 1 shows a typical functional diagram of such a random channel address DAU. Its advantages are simplicity, straightforward design, and comparatively low cost (depending upon performance and special features). In operation, the computer addresses a specific channel, the analog multiplexer (MUX) is set to the desired channel, a sample and hold (S&H) circuit acquires and holds the analog signal, an analog-to-digital converter (ADC) digitizes the signal, a ready signal is returned to the computer, and the data is presented to the data bus via TRI-STATE® bus drivers. If the data is 12-bit and the data bus is 8-bit, the data word must be broken into two bytes and addressed separately. The prime disadvantage of these DAU designs is that the computer must either enter a wait mode while data is readied or it can proceed with its assigned task, watch for a data-ready flag signal, and return for the data.

From the standpoint of microprocessor system design, it is clearly desirable to access input data as if it were main memory. It is further desirable that input data access time be equivalent to that of main memory so that the processor need not enter a wait mode while data is readied for input. One attractive method of accomplishing this is to use one A/D converter (of a type containing TRI-STATE output data latches) on each input data channel. Henceforth I shall refer to this as parallel conversion. Figure 2 shows such a system containing only an address decoder and multiple A/D converters with all outputs wired in parallel onto the data bus. Note the absence of S&H modules.

The advantages of this DAU system are the immediate data access and its simplicity. However, one's first thought on considering a parallel-conversion system might be that the cost of ADCs would exclude their consideration on a one-per-channel basis. But, although this may have been true in the past, currently available monolithic and hybrid ADCs are priced such that this system concept is entirely feasible. Furthermore, the converter price trend is definitely downward as more monolithic units are released, so the economic feasibility can only improve in the next few years, thus extending the application to an ever larger segment of the market. The ideal converter for use in the system of Figure 1 includes converter, comparator, and buffered TRI-STATE output data latches in one package. The unit would

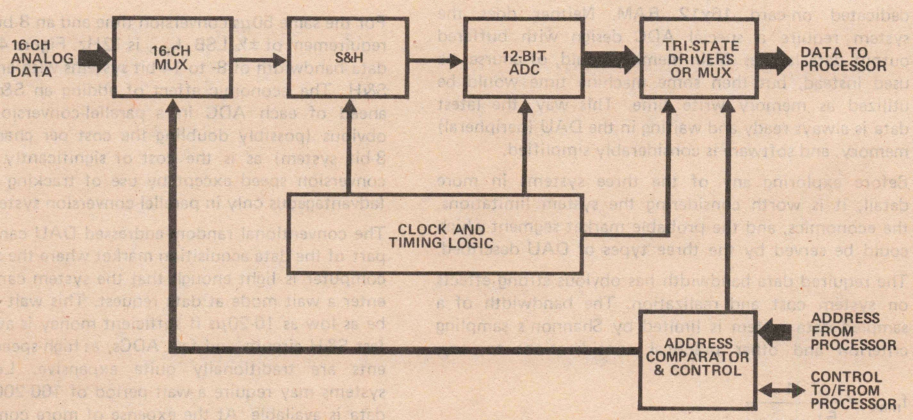

FIGURE 1. Random-Addressed Multiplexed DAU

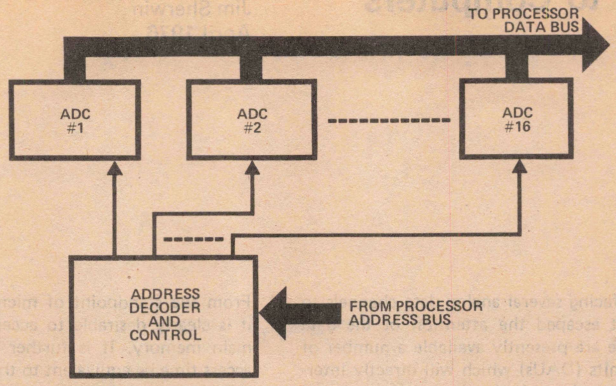

FIGURE 2. Parallel Data Conversion Concept

operate in the continuous convert mode with the last data remaining in the output latches until the next completed conversion shifts new data into the latches. Valid latest data is thus always available for readout on the data bus except for a brief period when the data is being updated. In contrast, a converter without buffered output latches does not hold data after a start-conversion signal and so must be operated in the command mode with a wait for data after the converter is started.

In spite of the advantages of the parallel-conversion DAU, there is (at present ADC prices) a more cost-effective way of providing the same immediate memory-access mode of operation, particularly for 12-bit data. Figure 3 shows a multiplexed DAU with self-contained memory which will interface to computer systems in the memory-access mode without a wait period.

The total package count of this system is lower than that of the parallel-conversion DAU, the cost/channel is lower, and the required space and power is lower. A disadvantage is that the accessed data may be as much as 800μs old, compared to a possible 1-4μs with parallel conversion. The key to the success of the system is the dedicated on-card 16x12 RAM. Neither does the system require a special ADC design with buffered output data latches. Main memory could, of course, be used instead, but then some machine time would be utilized as memory write time. This way, the latest data is always ready and waiting in the DAU (peripheral) memory, and software is considerably simplified.

Before exploring any of the three systems in more detail, it is worth considering the system limitations, the economics, and the probable market segment which could be served by the three types of DAU described.

The required data bandwidth has obvious strong effects on system cost and realization. The bandwidth of a sampled data system is limited by Shannon's sampling criterion and other practical considerations to, say,

$$f_{max} = \frac{1}{5\,t_{conversion}}$$

which is 4kHz for a 50μs conversion cycle time. However, when no S&H module is used ahead of the ADC, as in a parallel-conversion DAU, conversion must take place within the time it takes the input signal to change by ±½ LSB or 1 part in 2^{n+1}. For sine waves, the maximum rate of change is determined as follows:

$$\frac{\Delta v}{\Delta t} = \omega v_{pk},$$

but

$$v_{max} = \frac{2\,v_{pk}}{2^{n+1}}$$

therefore

$$\frac{2\,v_{pk}}{2^{n+1}\,\Delta t} = 2\,\pi\,f_{max}\,v_{pk}$$

and

$$f_{max} = \frac{2^{-(n+1)}}{\pi\,t_{conv}}.$$

For the same 50μs conversion time and an 8-bit accuracy requirement of ±½ LSB, f_{max} is 12Hz. Figure 4 compares data bandwidth of 8- to 14-bit systems with and without S&H. The economic effect of adding an S&H module ahead of each ADC in a parallel-conversion DAU is obvious (possibly doubling the cost per channel of an 8-bit system) as is the cost of significantly increasing conversion speed except by use of tracking converters (advantageous only in parallel-conversion systems).

The conventional random-addressed DAU can serve any part of the data acquisition market where the task of the computer is light enough that the system can afford to enter a wait mode at data request. This wait period can be as low as 10-20μs if sufficient money is available for fast S&H circuits and fast ADCs, as high-speed components are traditionally quite expensive. Lower cost systems may require a wait period of 100-200μs before data is available. At the expense of more complex software, the computer could remain busy during the period of data preparation, and would return for the data when it was made ready. The data bandwidth may be deter-

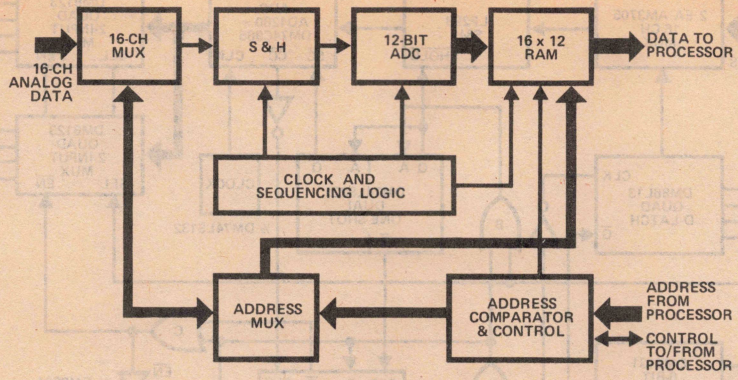

FIGURE 3. Multiplexed Immediate-Data-Access DAU

mined from Figure 4. Sixteen channels of 10 Hz data could be available if each channel were sampled once every 20 ms. This is a data throughput rate of 16 ch x 1/20 ms = 800 Hz. The higher cost DAUs of this type have capability of 50-100 kHz throughput rates. However, if the computer waits while data is made ready, it will be completely occupied with gathering data when the maximum throughput rate is utilized.

The parallel conversion DAU without S&H circuits is destined to operate on low-bandwidth data as indicated in Figure 4. To be economically feasible the ADCs must be of low cost. This means an 8- or 10-bit successive approximation register (SAR) or a 12-bit integrating monolithic ADC must be used. New ADC designs using tracking counters could increase data bandwidth capability over that possible with SAR counters. For purely economic reasons, then, use of parallel-conversion DAU systems will be limited to low bandwidth data – 10-30 Hz on 8-bit, 2-5 Hz on 10-bit, and less than 1 Hz on 12-bit systems. These bandwidth figures for 8- to 10-bit systems could be considerably improved, say by 8-10 times, if tracking converters were used in place of SAR converters. This definitely suggests that there is a need for low-cost tracking converters. Note that S&H circuits are not needed in the parallel-conversion systems.

The multiplexed DAU with memory can serve any segment of the data market. It is limited in bandwidth

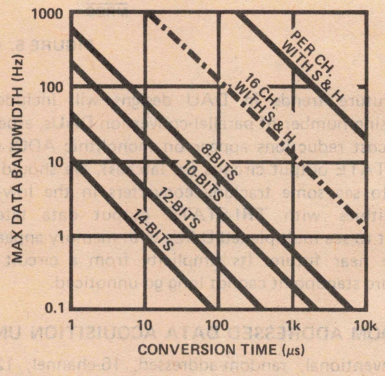

FIGURE 4. Data Bandwidth vs. Conversion Time

or data throughput rate principally by the S&H and ADC operating times, its cost per channel is only slightly higher than that of the conventional DAU, and it allows the computer to operate in the most efficient manner.

A comparison of system costs must include the following for a 16-channel system.

Parallel Conversion	Random Addressed Multiplexed	Multiplexed with Memory
16 A/D Converters	1 A/D Converter	1 A/D Converter
16 Anti-Aliasing Filters	1 S&H Module	1 S&H Module
Control Circuits	1 16-Channel Multiplexer	1 16-Channel Multiplexer
Additional power for extra converters	16 Anti-Aliasing Filters	16 Anti-Aliasing Filters
Lower data bandwidth	More complex control circuits	1 16 x 12 RAM
Simple software	Longer data access time	More complex control circuits
	Possibly more complex software	High-speed data access
		Simple Software

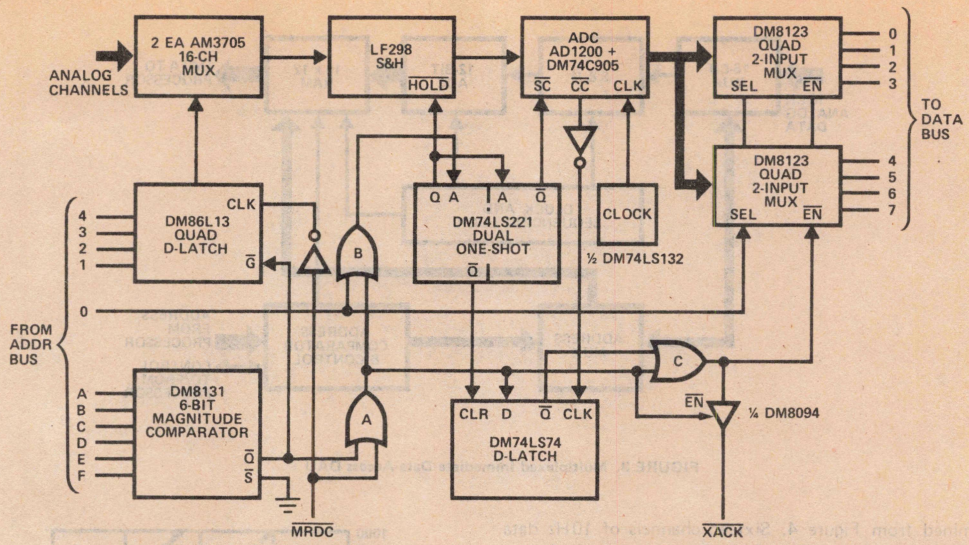

FIGURE 5. Conventional DAU for 8080

The future trends in DAU designs will include an increasing number of parallel-conversion DAUs, especially as cost reductions appear on monolithic ADCs with TRI-STATE output circuits (or latches). We should also start to see some tracking converters in the low-cost monolithics with TRI-STATE output data latches. Expect to see multiplexed DAUs with memory appearing in the near future. Its simplicity from a circuit and software standpoint cannot long go unnoticed.

RANDOM ADDRESSED DATA ACQUISITION UNIT

A conventional, random-addressed, 16-channel, 12-bit DAU is diagrammed in Figure 5. The analog section contains a 16-channel analog multiplexer, a sample-and-hold block, and a 12-bit ADC. A more complete system might contain a differential multiplexer and/or a differential (or instrumentation) amplifier preceding the S&H block. The data output circuits are arranged to interface an 8-bit data bus as found on an 8080 or 6800 microcomputer (μC). Since the data word is 12 bits, the μC must accept it in two 8-bit bytes. Normally the μC would address the DAU with two consecutive address locations corresponding to a 0 and a 1 at the address LSB to load the two bytes of data. The DM8123 multiplexers are ideally suited to this use. They have TRI-STATE output circuits, and the channel-select input may be directly driven from the address LSB. If a 16-bit address bus were being interfaced, such as in the PACE μC, the output multiplexers would be replaced with DM8097 or equivalent TRI-STATE output buffers (see Figure 11). In both instances, low-power versions of these parts, the DM81L23 and DM80L97, could be used to drive a lightly loaded data bus.

The address decoding is accomplished with a DM8161 6-bit magnitude comparator looking at the six most significant address bits. These 6 bits are compared with an address code hard wired into a DIP header which can be different for each DAU card in a system. Comparing only 6 address bits allows a possible 64 cards in a single system and uses up to 64 pages of memory position. If this is not satisfactory, two address comparators ORed together (DM8163) could select from 12 bits of address. The magnitude comparator(s) plus the four address lines to the 16-ch MUX make up the complete address decoding. The output of the magnitude comparator(s) indicates when this DAU has been addressed, and the four address lines to the MUX select the 1-of-16 channels of this DAU.

This circuit is designed to interface the 8080 μC. Thus, a memory read command $\overline{\text{MRDC}}$ must be received, and an acknowledgement $\overline{\text{XACK}}$ must be issued to indicate when data is ready. Operation is as follows: A valid address on address lines A-F causes comparator output $\overline{\text{Q}}$ to go low. This gates the inputs of the quad D latch to accept the 1-of-16 address word from address lines 1-4. At the occurrence of $\overline{\text{MRDC}}$ the address is clocked into the quad D latch and presented to the 16-ch MUX which selects the addressed channel. When $\overline{\text{Q}}$ and $\overline{\text{MRDC}}$ are both low, the output of OR gate A goes low, which enables the XACK signal buffer. If the address LSB is 0 (byte 1 of a 2-byte data request), OR gate B output goes low to trigger a one-shot.

The one-shot circuits are a simple means of timing the sample period and the converter start commands. There are other methods (see Figure 15) of accomplishing this timing without the hazards associated with one-shot circuits; however, the simplicity of this scheme lends itself to easy understanding of the timing required. The first one-shot generates a sample pulse of 5-30μs as required for the S&H to acquire and settle to 0.01% of value. Its $\overline{\text{Q}}$ output presets the single D latch ($\overline{\text{Q}}$ = 1). The trailing edge of this pulse returns the S&H to HOLD condition and triggers the next one-shot to generate a start conversion command of about 3μs. When the ADC completes conversion, its $\overline{\text{CC}}$ output goes low, thus clocking a 0 into the single D latch to reset its Q output low. Both inputs to OR gate C now being low will enable the output MUX and return a low on the $\overline{\text{XACK}}$

line indicating to the μC that data is ready. Address LSB = 0 selects the 8 LSB of the data word for presentation to the data bus. A subsequent address with LSB = 1 selects the 8 MSB of the data word, but will not trigger the one-shot or preset the D latch because the output of OR gate B will remain high. Since the output of OR gates A and C will be low, $\overline{\text{XACK}}$ is returned and the output MUXs are enabled to present byte 2 of the data word on the data bus. When $\overline{\text{MRDC}}$ returns high, the output circuits are disabled. If the 6-bit comparator does not see a valid address, no action is taken by the DAU.

This represents the simplest possible DAU for interfacing to computers. The interface to the 8080 is one of the simplest. Only minor modifications are required to interface, for example, the 6800 or PACE μCs (see Figures 9 and 11). The only timing anomaly in the logic system shown is that when the $\overline{\text{XACK}}$ buffer is enabled there will be a 10-40ns pulse of 0 output. The computer, however, does not act on an XACK signal at this time and so will enter a wait mode until $\overline{\text{XACK}}$ is returned later on.

The analog signal section has purposely been omitted from this discussion of interfacing to processors because its details will depend upon analog signal levels, the possible requirement for differential channels, the possible need of an instrumentation amplifier following the multiplexer, and S&H timing requirements. The analog section of the DAU may be made up of various components, depending upon the required performance and operating conditions. A pair of 8-channel multiplexers will give the flexibility of connecting as differential 8-channel or as single ended 16-channel whereas a single 16-channel MUX with space and wiring on the board for another 16-channel MUX would allow for either 32 channels or 16 differential channels. A pair of AM3705s could be used for lowest cost where analog signals are no greater than ±5V. The S&H circuit could be monolithic LF198, hybrid LH0023, LH0043 or LH0053, made up of individual discrete and integrated circuits, or it could be any of several available modules.

The ADC used in this system may be of a conventional design with speed and accuracy being the only important technical considerations. No special TRI-STATE output or output data latches are needed as the data is latched in the register until a new start conversion (SC) command is given. The ADC could be made up of an AD1200 ADC building block plus DM2504 or MM74C905 successive-approximation register, it could be an AD1210 plus LH0071 reference and appropriate MOS-TTL and TTL-MOS buffers, or it could be any one of a number of other ADCs on the market.

Total power is about 2.8 watts and cost is about $9.50 per channel for components as indicated in Table 1. Note that output drivers are standard TTL circuits whereas low power TTL may be used for lower power dissipation where a lightly loaded data bus is to be driven.

PARALLEL-CONVERSION DATA ACQUISITION UNIT

Parallel data conversion is likely the simplest possible μC data system concept which will effect immediate access to latest input data as if it were main memory. It may be treated as main memory by the processor and is only slightly more complex than the simplified system of Figure 2. The individual ADCs in Figure 2 include TRI-STATE output for direct wire ORing on the data bus. However, to make each capable of driving a heavily loaded system bus would require significant and unnecessary power dissipation in each ADC. Accordingly, except in minimally loaded systems, a separate set of TRI-STATE TTL output data buffers would be added to Figure 2. Small differences in the address decoder and control circuits will exist, depending upon which μC system will be used.

The control circuits are exceptionally simple, being required primarily to accept the memory read command and to return a memory ready signal. The most complex part of the control circuits is that required of μC systems which accept data in two 8-bit bytes rather than in one 16-bit byte, yet even this added complexity is minimal.

Table 1. Conventional DAU Power & Cost

		P_D (mW)	$ (100s)
1 –	16-Channel MUX	300	19.55
1 –	S&H	500	74.50
1 –	ADC	600	40.00
2 – DM8123	Quad 2-Input MUX	800	2.56
1 – DM8161	Hex Comparator	250	2.56
1 – DM86L13	Quad D-Latch	30	1.28
1 – DM74LS221	Dual One-Shot	30	3.00
1 – DM74LS132	Quad Schmidt NAND	60	2.00
1 – DM7432	Quad OR Gate	100	.49
1 – DM74LS74	Dual D F-F	20	3.00
1 – DM8094	TRI-STATE 4 x Buffer	144	.71
		2834	150.05
			$9.38/Channel

Table 2. Microprocessor System Characteristics

	8080	PACE	6800	SC/MP
Address Word Length	16-bit	16-bit data/address bus	16-bit	12- or 16-bit
Data Word Length	8-bit		8-bit	8-bit
Address & Data Polarity	All chips are 1 = true; however, if Intel system bus drivers and receivers are used, 8080 system data and address bits are 0 = true.			
Address Strobe	None	NADS = 0 to set memory address latches	VMA = 1 (concurrent with)	NADS = 0
Memory Read Strobe	MRDC = 0 to read data	IDS = 1 to input data	R/W = 1 to read data	NRDS = 0 to read data
Maximum Clock Rate	2MHz	2MHz	1MHz	1MHz

Since μC systems differ somewhat from one another, it is worth our effort to look at the hardware and software details and the system timing requirements of several of them when considering a DAU interface. From this consideration we can establish the desired function and characteristics of the ADCs, DACs, address decoders, control components, and μC interface signals. The following exercises include interfacing parallel conversion DAUs of 8- and 12 bits to the Intel 8080, the National PACE, and the Motorola 6800 microcomputer systems. Interface to other systems such as National's SC/MP will be similar. All request, control, and answer signals are considered along with the required signal polarities and timing relationships. Table 2 summarizes the important characteristics of these three systems.

8080 Interface

The 16-channel, 8-bit parallel-conversion DAU shown in Figure 6 will interface with an 8080 μC system without a wait period in the memory-read cycle. This system can be built with existing components for about $10 per channel. It is a minimal system, capable of driving only a lightly loaded data bus, as the MM5357 ADCs can drive but a single TTL load. When heavier loads must be driven, two quad TRI-STATE output buffers will be needed. The address decoding uses a 4-line to 16-line decoder which selects the addressed channel from the four least significant (LSB) of address bits. A 6-bit address comparator compares the six most significant (MSB) address bits with a code hard-wired into the code-select-header. The comparator output gates the 4:16 decoder only if the proper memory page (1 of 64) is addressed. The comparator output, gated by the memory read command $\overline{\text{MRDC}}$, inhibits the clock to prevent data change in the output latches during the data access period. Concurrence of the correct address and $\overline{\text{MRDC}}$ also returns a data-ready acknowledgement to the μC via the TRI-STATE output of a buffer. No other logic is required; however, inverters are necessary in the ADC enable lines due to a sense mismatch in the 4:16 decoder output and the ADC enable inputs. The system is truly as uncomplicated as indicated in Figure 2.

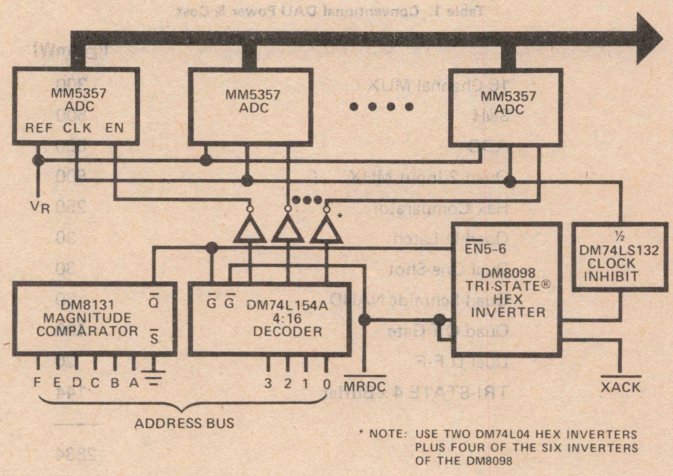

FIGURE 6. 16-Ch, 8-Bit Parallel-Conversion DAU for 8080

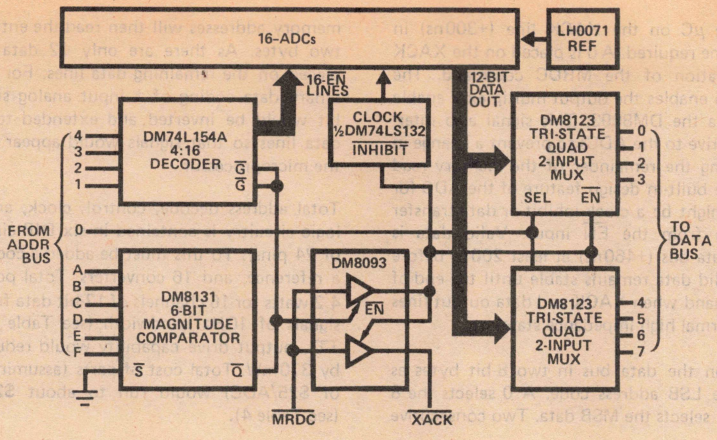

FIGURE 7. 16-Ch, 12-Bit Parallel-Conversion DAU for 8080

As 12-bit data is likely of greater interest in the market, the remainder of the discussion will consider the logic necessary to handle 12-bit data. Accordingly, Figure 7 shows a 16-channel, 12-bit parallel-conversion DAU for the 8080. No part number designation appears on the ADCs because they are hypothectical units possessing the characteristics considered desirable in this application. The converters contain the DAC switches, ladder network, comparator, up/down counter (for tracking conversion), control logic, and TRI-STATE buffered outputs. They operate continuously with the output data buffer updated at the end of each conversion. Such a converter containing CMOS logic could settle in less than 1-4μs (after an initial but longer acquisition period) without being costly to construct, and would thus provide 12-bit accuracy to ±½ LSB at a data bandwidth of 10-20Hz. A single external buffered reference could suffice for all converter channels. An external gated clock could drive all converters. Address decoding is the same as outlined for the 8-bit system. The LSB address bit is used to select byte 1 or byte 2 of the 12-bit output data word by means of the two DM8123 quad, TRI-STATE, 2-input multiplexers. Address bits 1-4 are decoded into 1-of-16 select bits to enable the TRI-STATE output of the selected ADC. Since the 1-of-16 output select of the DM75L154A decoder is 0 true, it is desirable that the ADC enable input be 0 true. Otherwise, 16 inverters would be required. The control timing may be considered in reference to the 8080 timing requirements shown in Figure 8.

The DM8131 address comparator provides an output to gate the 4:16 decoder and to enable the DM8093 quad TRI-STATE line driver. This occurs (+30ns) only if the address is valid for this data card. If the address is valid, the 4:16 decoder accepts the address and the DM8093 is set to accept the MRDC command at inputs 5 and 6 (+250ns). The decoder output to the ADC enable lines is available (+180ns), and valid data is available from the selected ADC (+330ns). As the data card must return a data ready signal (+440ns) to prevent extending the memory access cycle, the DM8093 transmits the $\overline{\text{MRDC}}$

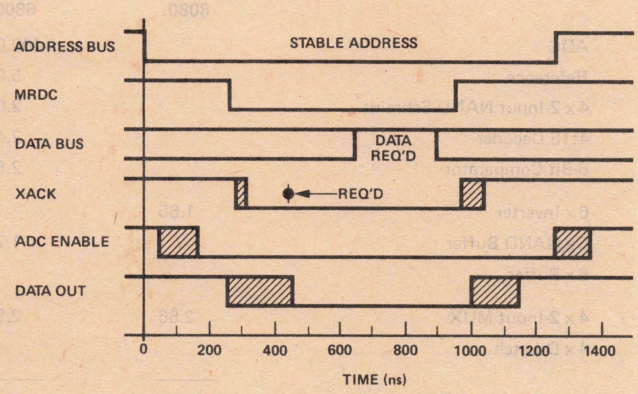

FIGURE 8. Timing and Control for 8080

back out to the μC on the XACK line (+300ns) in advance of the time required. A 0 is placed on the XACK line for the duration of the MRDC command. The MRDC signal also enables the output multiplexer enable lines (+300ns) via the DM8093. This signal also interrupts the clock drive to the ADCs to prevent a change in data output during the remainder of the memory read cycle. A desirable built-in design feature of the ADC for this application might be a clock inhibit or data transfer inhibit operating from the $\overline{EN}$ input. Valid data is present on the data bus (+460ns) at least 200ns before it is required. Valid data remains stable until the end of the MRDC command when XACK and data output lines return to their normal high-impedance states.

Data is placed on the data bus in two 8-bit bytes as controlled by the LSB address code. A 0 selects the 8 LSB data, and a 1 selects the MSB data. Two consecutive memory addresses will then read the entire data word in two bytes. As there are only 12 data bits, zeros are placed on the remaining data lines. For 2s complement binary data coding of ± input analog signals, the 12th bit would be inverted and extended to the remaining data lines so that signals would appear as valid data to the microprocessor.

Total address decode, control, clock, and output drive logic circuitry is contained in six DIP circuits (only one of 24 pins). To this must be added a code-select header, a reference, and 16 converters. Total power required is 4.2 watts for 16 channels of 12-bit data from ±5V analog signals of 10Hz bandwidth (see Table 3). Low Power TTL output drive capability would reduce power drain by 370mW. Total cost of parts (assuming a future price of $25/ADC) would run to about $26 per channel (see Table 4).

Table 3. Power Required, 16-Channel, 12-Bit

			P_D (mW) 8080	6800	PACE
	16 –	ADC		3200	
	1 – LH0071	Reference		45	
	1 – DM74LS132	4 x 2-Input NAND Schmidt		60	
	1 – DM74L154A	4:16 Decoder		24	
	1 – DM8131	6-Bit Comparator		250	
	1 – DM8093	4 x Buffer	170		
or	1 – DM8099	6 x NAND Buffer		175	
or	3 – DM8097	6 x Buffer			975
	2 – DM8123	4 x 2-Input MUX	400	400	
or	1 – DM86L13	4 x D-Latch			30
			4199	4154	4584

Table 4. Cost of Components, 16-Channel, 12-Bit

			$ (100s) 8080	6800	PACE
	16 –	ADC		400.00	
	1 – LH0071	Reference		5.00	
	1 – DM74LS132	4 x 2-Input NAND Schmidt		2.00	
	1 – DM74L154A	4:16 Decoder		2.46	
	1 – DM8131	6-Bit Comparator		2.56	
	1 – DM8098	6 x Inverter	1.65		
or	1 – DM8099	6 x NAND Buffer		1.70	
or	3 – DM8097	6 x Buffer			5.55
	2 – DM8123	4 x 2-Input MUX	2.56	2.56	
or	1 – DM86L13	4 x D-Latch			1.28
			416.23	416.28	418.85
				≈ $26/Channel	

6800 Interface

For other μC systems, the logic will change slightly. Figure 9 shows the logic section of the DAU of Figure 7 modified as necessary to interface with the 6800 μC. The 6800 timing and control signals are shown in Figure 10. With the 6800, the address information, the valid memory address VMA signal, and the read/write W/R signal all come up approximately simultaneously and remain for about one clock period of 1μs (min.). The data need not appear on the data bus until 100ns thereafter. The valid address decoding is accomplished by ANDing the VMA and R/W signals together in a TRI-STATE 2-input AND gate. When enabled by the comparator output, this gate returns a READY signal to the μC and enables the output multiplexers. The appropriate data byte is selected by the LSB address bit as with the 8080 system. The necessary 10ns data hold time is provided by the ADC and output multiplexer disable delays. The remainder of the DAU is identical to that of Figure 7. Cost and power required are also similar to those of the 8080 system interface.

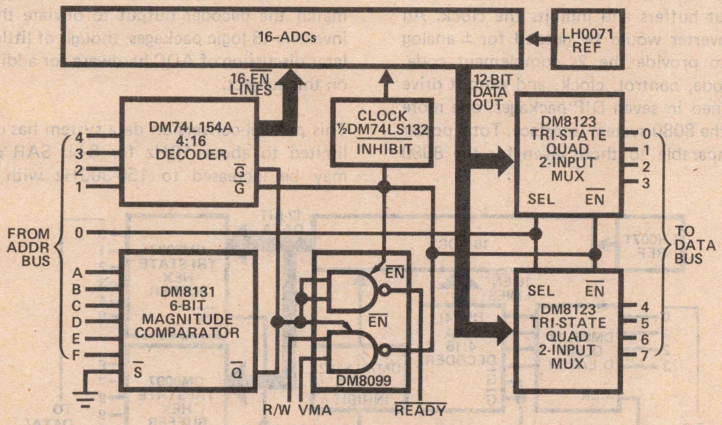

FIGURE 9. 16-Ch, 12-Bit Parallel-Conversion DAU for 6800

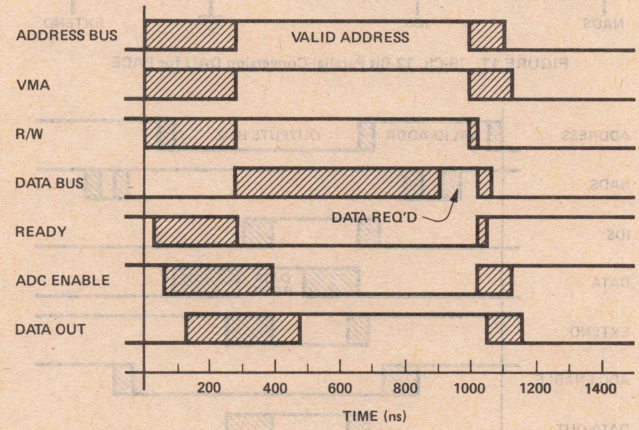

FIGURE 10. Timing and Control for 6800

PACE Interface

Figure 11 shows the logic section of the DAU of Figure 7 modified to interface with a PACE μC. The PACE timing is shown in Figure 12. Since the PACE μC has but a single address/data bus, address latches are required for address decoding. The DM8131 address comparator contains output latches, but the DM74L154A 4:16 decoder does not, so a quad latch is inserted ahead of the 4:16 decoder. The latches all set on the rising edge of the NADS signal provided by PACE during the time that address information is on the bus, and drop out on the next NADS signal. Comparator output applied to gate the 4:16 decoder provides an enable ADC signal lasting until the falling edge of the next NADS pulse. The IDS signal ANDed with the comparator output enables the TRI-STATE output buffers and inhibits the clock. An additional MSB inverter would be needed for ± analog signals in order to provide the 2s complement code. Total address decode, control, clock, and output drive circuitry is contained in seven DIP packages, one more than required for the 8080 system interface. Total power and cost are comparable to those given for the 8080 system interface.

ADC CHARACTERISTICS

The ADC for use on a parallel-conversion DAU must contain TRI-STATE output data latches. Otherwise it may be conventional. The MM5357 was designed for direct connection to a data bus, therefore it contains the necessary output latches. At this writing there are other ADCs with the TRI-STATE output latches appearing on the market, and more can be expected. The MM5357 is nearly ideal for use in an 8-bit parallel-conversion DAU. It would be even more suitable to this use if it were a tracking converter, and the polarity of its enable input and of its data output were of opposite polarity. The data polarity is of lesser importance as the bus drivers probably needed may as well be inverting as non-inverting except for common usage. The enable polarity should match the decoder output to obviate the need for 16 inverters (3 logic packages, though of little cost). See the later discussion of ADC hardware for additional thoughts on this subject.

This parallel-conversion data system has data bandwidth limited to about 10 Hz for 8-bit SAR converters, but may be increased to 150-300 Hz with 8-bit tracking

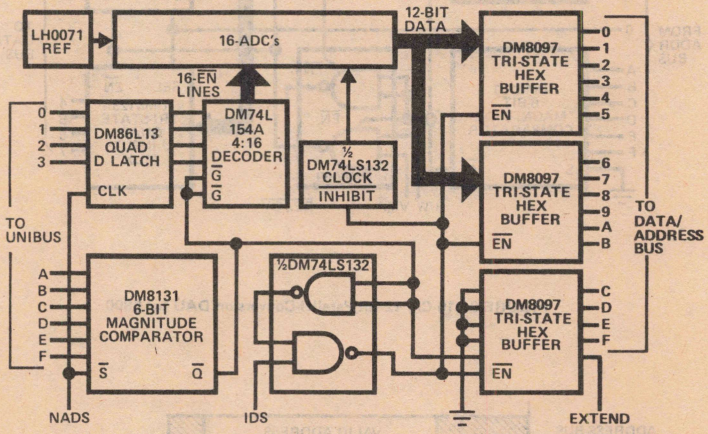

FIGURE 11. 16-Ch, 12-Bit Parallel-Conversion DAU for PACE

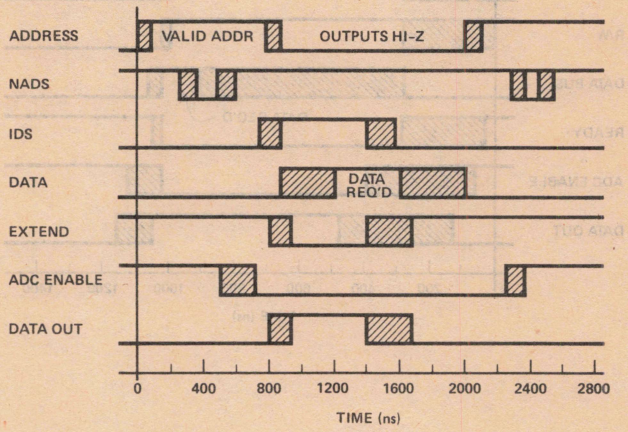

FIGURE 12. Timing and Control for PACE

converters. 12-bit data bandwidth will be 1/16 that of the 8-bit systems. On the other hand, no S&H module is required. Data rates could be considerably increased if S&H modules were added to each channel; however, costs per channel would more than double. For use with S&H modules, SAR logic converters would be faster than tracking types, allowing data bandwidths of over 600 Hz/channel for 12-bit data.

MULTIPLEXED DATA ACQUISITION UNIT WITH MEMORY

A multiplexed data acquisition system containing memory is probably the most cost-effective way of providing an immediate data-access interface to processors. The processor may address the peripheral data-acquisition unit to obtain immediate data without entering a wait mode, just as if it were accessing main memory. Latest valid data is always present within the DAU memory which is updated at a rate determined by the channel multiplexer rate and ADC conversion speed. There is no need to write subroutines into processor software or firmware to address and request data from the peripheral, resume its assigned processing task while watching for a flag set by the peripheral indicating that data is ready, and returning to accept data from the peripheral.

The multiplexed DAU with memory shown in Figure 3 takes care of routinely updating its memory by sequentially sampling each data channel, digitizing the channel signals, and writing data into its self-contained memory. When the DAU is interrogated, the sequential process is momentarily interrupted, the RAMs are addressed by the processor, and data is read out to the data bus. The memory can be three each DM8599 16x4-bit RAMs. These have TRI-STATE outputs, so can connect directly to the data bus. Note that the RAM inverts the data bits from the ADC. The RAMs are available in low-power TTL to drive a lightly loaded data bus, or they are available in Schottky versions for driving higher speed systems. In fact, almost the entire logic system could be realized in Schottky circuits, which should allow interfacing even the new fast bipolar μCs without a wait cycle.

The MUX sequencing circuits are shown in Figure 13. When the μC is not accessing memory on the DAU, the 16 data channels are scanned in continuous sequence.

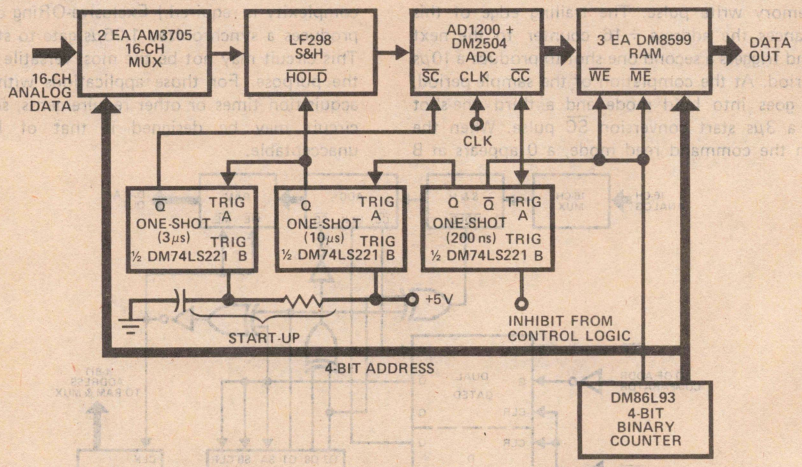

FIGURE 13. Sequencing Logic with OS

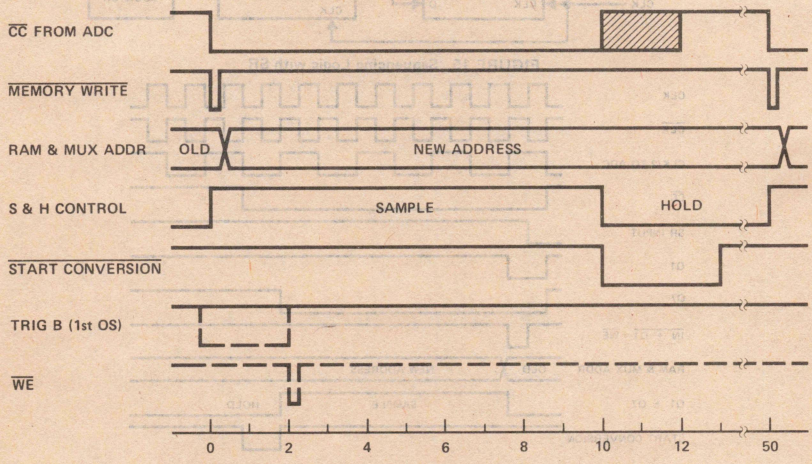

FIGURE 14. Timing for One-Shot Sequencing

Data on each channel is sampled and held in the S&H module while the ADC converts the analog data to digital. At the completion of conversion, the digital output of the ADC is written into the RAMs before the multiplexer selects the next channel. The timing and sequencing of channels is accomplished with a 4-bit binary (÷ 16) counter and three one-shot pulse generators. Where one-shots are undesirable, an alternate approach using shift register timing could provide the same function. A valid address output from the address comparator switches the RAM address input from the ÷16 counter to the address bus input, thereby addressing the RAM to the desired channel for data readout. If the data conversion sequence is in the memory write condition, the gate applied to WE prevents switching the MUX to the address bus or returning an XACK signal until the memory has been loaded. Thereupon, the sequence is interrupted as outlined above. The interruption of the sequence lasts for about 1300 ns (8080 system) while the address is valid.

The sequential data conversion cycle is shown in the timing signals of Figure 14. The conversion-complete $\overline{CC}$ output of the ADC triggers a one-shot to generate a 200 ns memory write pulse. The trailing edge of this pulse advances the address ÷ 16 counter to the next channel and triggers a second one-shot to produce a 10 μs sample period. At the completion of the sample period, the S&H goes into hold mode and a third one-shot generates a 3 μs start conversion $\overline{SC}$ pulse. When the DAU is in the command read mode, a 0 appears at B trigger input to the first one-shot. If a $\overline{CC}$ signal occurs during the time the 0 is present on the B input, the one-shot will not be triggered until the B input returns to a 1.

An alternate sequencing circuit without one-shot circuits is shown in Figure 15 with timing relationships in Figure 16. It makes use of a shift register and exclusive-OR gates to generate the gates needed to write into memory, sample and hold, and start conversion. The ADC clock is generated at twice the desired clock frequency and divided by 2 in a D flip-flop. In this manner, the minimum gate width is 1/4 of the ADC clock period (620 ns in this example). The $\overline{CC}$ signal is clocked into a D flip-flop with a delay of 620 ns. The delayed output clears the shift register (SR) and is clocked into the SR after an additional 620 ns delay. An exclusive-OR of the SR input and Q1 output generates a 620 ns gate to write data into the RAMs. The trailing edge of this $\overline{WE}$ gate clocks the ÷ 16 counter to advance the MUX and RAM address to the next channel. Exclusive-ORing of SR Q1 and Q7 produces an 8.75 μs sample gate. (If the acquisition and settling time of the S&H is greater than 8.75 μs, additional circuit complexity is required.) Exclusive-ORing of Q7 and Q8 produces a synchronized 1.25 μs gate to start the ADC. This circuit may not be the most versatile or elegant for the purpose. For those applications with longer S&H acquisition times or other requirements, some alternate circuit may be designed if that of Figure 15 is unacceptable.

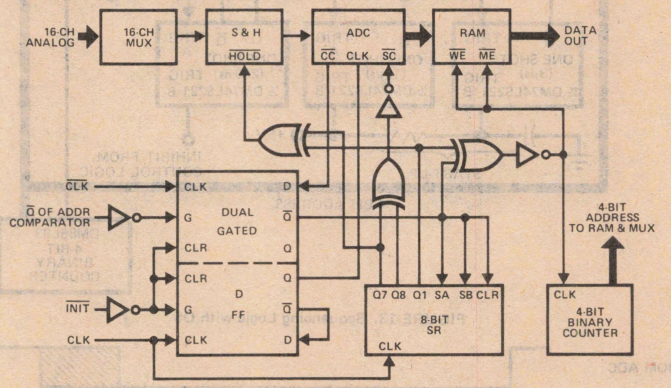

FIGURE 15. Sequencing Logic with SR

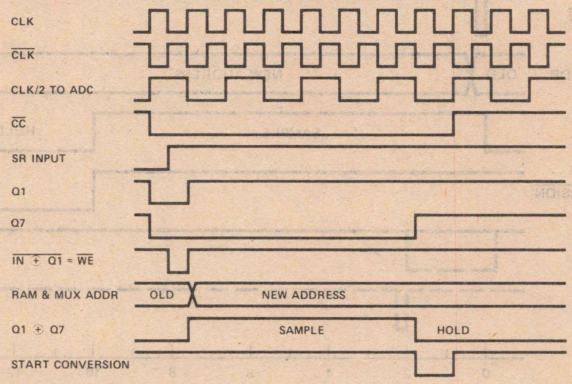

FIGURE 16. Timing for S-R Sequencing

The μ-computer interfaces shown in Figures 17 and 18 are similar to that of Figure 5. The PACE interface is seen to be slightly less complex than that of Figure 17 for 8-bit data-bus machines. A single DAU card with plug-in or strap options could be built to interface any of the three μCs considered. Such a universal circuit is shown in Figure 19. This circuit also includes an option to provide binary output for unipolar analog signals or complementary binary output for ± signals. In the case of binary output, the 13-16th data bits are set to 0. In the case of complementary binary, the sign bit is extended to the 13-16th data bits for valid recognition by the μC.

The total dissipation is 3.5 watts and cost is $11 per channel as shown in Table 5. Both are only slightly greater than those for the conventional DAU.

The ADC desired for this application is similar to the conventional ADC except that the ADC data output should be complementary to compensate for the data inversion within the RAMs. The AD1210 or AD1200 are thus ideal choices for an ADC in the multiplexed DAU with memory.

CONVERTER CHARACTERISTICS

Each approach to the DAU requires different characteristics of the ADC. Table 6 summarizes the requirements for each of the three DAU types. The sequential or addressed DAU types require similar ADCs. If the conventional addressed DAU must utilize bus drivers, the desired ADC characteristics are identical to those for the sequential DAU with memory. Only the parallel-conversion DAU is seen to require buffered TRI-STATE output latches.

By far the most important characteristic of an ADC for use in a parallel-conversion DAU is that it have buffered TRI-STATE output latches. It is desirable that it also have the other characteristics checked in Table 6. Items 1 and 2 are by far the most important of the desired characteristics. The need for item 1 has been discussed. TTL compatible control and data signals are desirable so that TTL-MOS and MOS-TTL interface buffers are not required between the ADC and the rest of the system. Dual output strobing makes it possible to wire-OR interface directly to an 8-bit data bus or to use only an 8-line buffer without the need for the output multi-

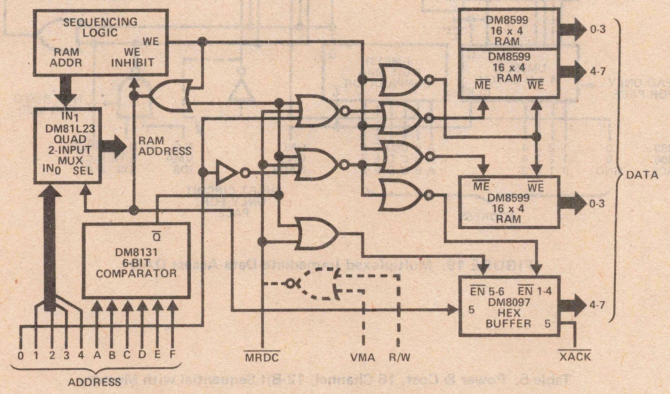

FIGURE 17. Address Comparator and Control for 8080 (6800)

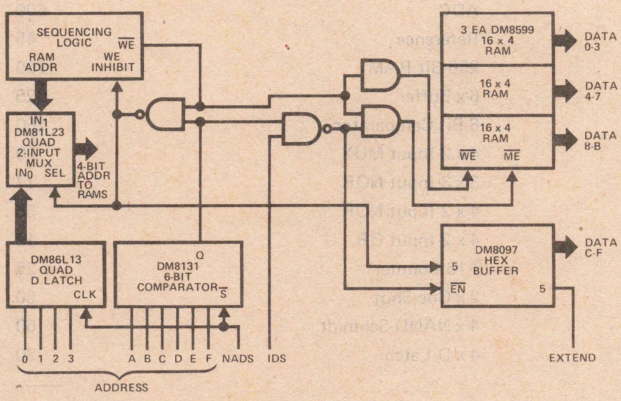

FIGURE 18. Address Comparator & Control for PACE

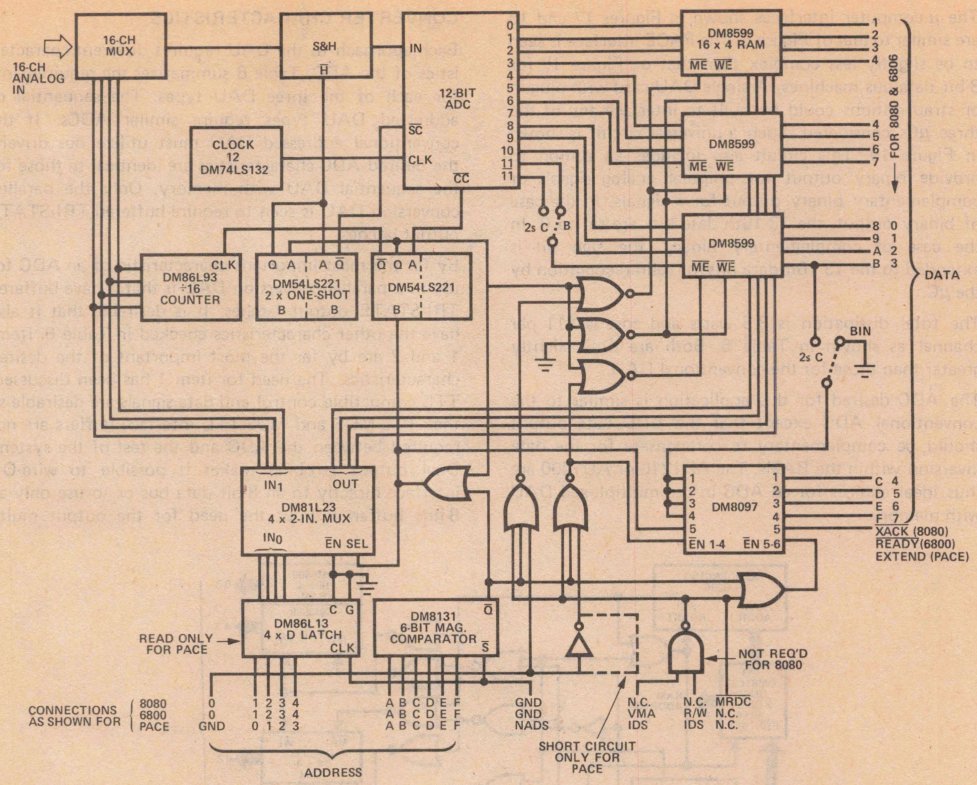

FIGURE 19. Multiplexed Immediate-Data-Access DAU

Table 5. Power & Cost, 16-Channel, 12-Bit Sequential with Memory

		P_D (mW)	$ (100s)
1 –	16-Channel MUX	300	19.55
1 –	S&H	500	74.50
1 –	ADC	600	40.00
1 – LH0070	Reference	45	5.00
3 – DM8599	256-Bit RAM	1200	15.36
1 – DM8097	6 x Buffer	325	1.65
1 – DM8131	6-Bit Comparator	250	2.56
1 – DM81L23	4 x 2-Input MUX	20	2.00
1 – DM74LS27	3 x 3-Input NOR	17	3.00
1 – DM7402	4 x 2-Input NOR	55	.35
1 – DM74L32	4 x 2-Input OR	12	.64
1 – DM86L93	÷16 Counter	25	2.11
2 – DM74LS221	2 x One-Shot	60	6.00
1 – DM74LS132	4 x NAND Schmidt	60	2.00
1 – DM86L13	4 x D-Latch	30	1.28
		3500	176.00
			$11/Channel

plexers shown in Figure 5 et. al., although a separate buffer is required in most systems. Tracking operation provides the higher speed useful in a conversion circuit without an S&H. Inhibiting data transfer to output data latches when the output is enabled prevents changing the output code while data is being read from the data bus. This function can be accomplished with an external gate, but could be convenient if handled within the ADC logic. Straight binary (not complemented) output is desired for all μC interfaces (except the 8080 when operating with Intel system bus drivers and receivers). As it may be necessary to add TRI-STATE line drivers to drive the data bus, data inversion can be handled by inverting buffers when required. The availability of both Q and $\overline{Q}$ outputs on the MSB simplifies data readout as binary or 2s complement without adding an external inverter. Table 6 has been arranged in the approximate order of preference for parallel-conversion DAU use; the preference will be different for multiplexed data.

The National MM5357 is the choice for an 8-bit ADC having buffered TRI-STATE output latches and TTL compatibility when converting ±5 or 0-5V analog inputs. If converting 0-10V inputs, it becomes 10V CMOS compatible. Several monolithic ADCs of 8 to 12 bits have been announced. These monolithic converters and future versions of them promise to bring converter prices down to a level which will make parallel-conversion economically feasible. Several hybrid converters have also been announced with attractive prices; however, it is the monolithics which promise the lowest ultimate cost. Features of several of these new products are compared in Table 7. Although only the MM5357 and the AD7550 are suitable in present form, their prices and characteristics show that the desired attributes are and will be possible at the needed prices.

The future ADC most suited for use in a parallel-conversion DAU might appear as in Figure 20. This

Table 6. Desired A/D Converter Characteristics

	Parallel Conversion	Sequential w/ Memory	Addressed w/o Memory
Buffered TRI-STATE Output Data Latches	x		?
TTL-Compatible Control & Data Signals	x	x	x
Dual Output-Enable (Bits 0-7 & Bits 8-11)	x		x
Counter Logic	UP/DN	SAR	SAR
Internal Comparator	x	x	x
Both Q & $\overline{Q}$ Outputs on MSB	x	x	x
Binary Output Polarity	Data*	$\overline{\text{Data}}$	Data*
Busy Output (TRI-STATE w/ Enable)	?		x
Internal Clock		x	x
Continuous Recycle when CC = SC	x		
Inhibit Data XFR to Latches when Enabled	x		

* Unimportant if Buss drivers used.

Table 7. Low-Cost Monolithic and Hybrid ADCs

	National MM5357	Analog Devices AD7570L	Teledyne 8702	National AD1210 (Hybrid)	Analog Devices AD7550
Number of Bits	8	10	12	12	13
Cost (in 100s)	$7.95	$69.00 (1-49)	$29.50	$24.95	$25.00
Conversion Method	Potentiometric	R-2R	Differential Charge Balancing	R-2R	Integrating
Logic Type	PMOS SAR	CMOS SAR	CMOS Integrating	CMOS SAR	CMOS Quad Slope
Conversion Time	25μs	20μs + Comp. Settling	20ms	130μs	40ms
Logic Interface at 5V	TTL	TTL	TTL	TTL	TTL
Analog Sig. 0-10V	CMOS	TTL/CMOS	TTL	CMOS	TTL/CMOS
External Circuits Required	Ref + Clock	Ref + Comparator	Ref	Ref + Clock	Ref
Output Buffered Latch?	Yes	No	Yes	No	Yes
TRI-STATE Output?	Yes	Yes	No	No	Yes
Separate Output Enables?	NA	Yes	Not Strobed	No	Yes
Output Code	Inverted	Normal	Normal	Inverted	2s Complement
Power Dissipation	170mW Dynamic	10mW Standby + Dynamic + Comparator	20mW Dynamic	140mW Dynamic	10mW Dynamic

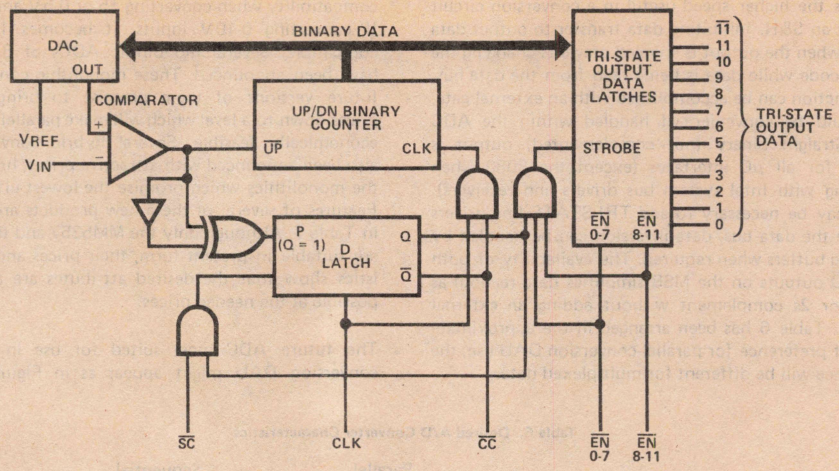

FIGURE 20. Tracking ADC for Parallel-Conversion DAU

design meets all the goals of Table 6. It could run at a clock rate of 0.25-1 MHz (1-4 μs conversion time) because it is a tracking converter, it contains TRI-STATE buffered output data latches, the separate high and low bit-enable lines allow two-byte operation of an 8-bit data bus, the output latches will not change state when the output is enabled, and the $\overline{CC}$ and $\overline{SC}$ terminals may be strapped for continuous conversion without missing a clock period. An 8- or 10-bit converter and possibly a 12-bit converter of this type could be built on a single chip without much difficulty. If not, a hybrid or two-chip design is practical. Where speed is not of importance, monolithic 10- or 12-bit converters can be built with integrating or voltage-to-frequency conversion techniques. The integrating technique possibly allows the greatest accuracy with the least circuitry, and is a prime contender for the application. As the integrating ADC utilizes both linear and digital circuits, it is normally of multi-chip design. However, as technology advances, it will become increasingly practical to produce the low-drift, low-offset amplifiers, integrators, and current sources required of a 12-bit ADC on a single reasonably small chip along with the necessary logic. A two-chip approach would likely be the choice today. We will certainly see some of these desired design features appearing on ADCs in the near future.

As far as ADCs and DACs are concerned, the entire makeup of their internal logic sections is different from that of conventional converters of today (except for the MM5357 and AD7550). Tables 6 and 8 outline the desired characteristics of ADCs and DACs for parallel-conversion and multiplexed systems. Figures 20 and 21 indicate the logic required. The ADC of Figure 20 is suitable for relatively high speed data acquisition without S&H circuits, while that of Figure 21 is suitable for slowly varying data only.

DATA DISTRIBUTION SYSTEMS

Until now, the discussion has centered entirely around the data acquisition end of the system. At first thought, the data distribution may seem almost trivial. However, there is still the address recognition and decoding plus the control functions. The conventional data distribution unit (DDU) has used a single DAC, a multi-channel analog demultiplexer, low-pass filters and possibly S&H

Table 8. Desired D/A Converter Characteristics

	Parallel Conversion	Multiplexed System
Hi-Z Digital Input Circuits	x	x
Strobed Data Input Latches	x	x
Dual Input Data Strobes (Bits 0-7 & Bits 8-11)	x	x
Optional Internal Inversion of MSB	x	x
Internal Output Amp & FB Resistors	x	?
Internal Reference	?	x

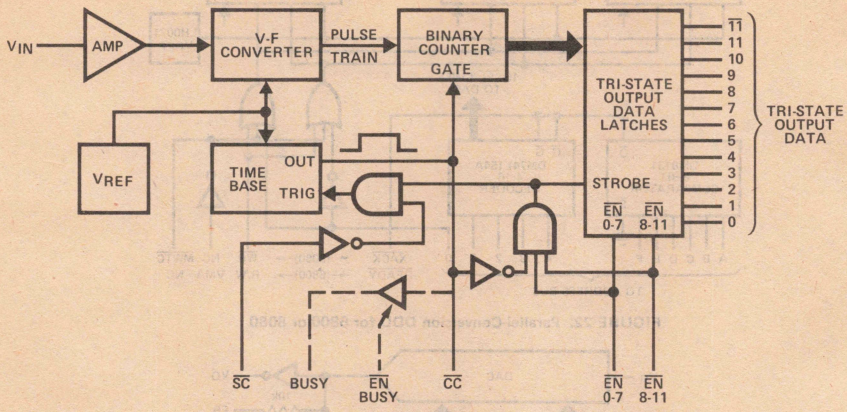

FIGURE 21. V-F ADC for Parallel-Conversion DAU

circuits on each channel reconverted to analog form. Such a system could benefit from a DAC with input data latches and separate (double-byte) input gating or strobing controls while a parallel-conversion DDU has even more need of these input characteristics.

The parallel-conversion DDU shown in Figure 22 would, if constructed with available DACs, require 12-bit input data latches ahead of each DAC. The characteristics desired of a DAC for this use are listed in Table 8. High impedance digital inputs prevent loading the data bus while a strobed input data latch allows entering data only in the addressed DAC and holding it until updated (thus performing the function of DAC and S&H). Separate input data strobes for low and high bits are used for the same reason as with the ADC, for alternate enabling on successive input data bytes. Figure 23 outlines the desired DAC for use in a parallel-conversion DDU.

The DDU address decoding and complexity is similar to that of the DAU. Input data strobing separated as 8 LSB and the remaining MSB is an advantage when used on 8-bit data bus systems. The cost per channel is essentially that of the DAC used. Likewise, for power dissipation. Practicality will be entirely dependent on ultimate cost of the converters. Advantages over a demultiplexed system are that only minimal output filters are required and that an output amplifier per channel is not required (already exists in each DAC).

CONCLUSION

Each type of DAU described exhibits unique advantages as indicated in the comparisons of Table 9.

Further reduction in the costs of monolithic converters will make the parallel-conversion type of DAU attractive where low-speed data is handled. For 8-bit data, this type of DAU is extremely attractive at this time because the DAU cost per channel is essentially that of an ADC which is as low as $8 in lots of 100.

It would seem that the multiplexed DAU with memory exhibits all of the advantages of the conventional random-addressed DAU plus all those of the parallel data conversion DAU except that the data in any specific channel may be older. Offsetting this single comparative disadvantage are significantly lower cost per channel, lower power requirements, and no requirement for special ADCs with buffered output latches. The multiplexed approach with memory is only slightly more complex or costly than a standard DAU, yet it brings the great advantage of high-speed immediate data access with significant cost savings over the parallel conversion technique.

Although the character of an ADC or DAC used in a parallel-conversion data system differs markedly from those used in the usual multiplexed data system, the processor interface requirements are similar or identical. The sense of μC bus control signals is of relatively minor importance so long as they are standardized among the several μC units available. Positive-true data and address signals are possibly a slight advantage over zero-true signals when TRI-STATE circuits are used. For the multiplexed system described, data inversion through the RAM would suggest the advantage of complementary binary output data from an ADC.

Conventional ADCs and DACs available today (except the MM5357 and AD7550) do not have the characteristics needed for parallel-conversion systems. However, this picture is changing as more units are designed for direct data bus interface. Fortunately, however, the multiplexed DAU with memory does not require the bus oriented type of ADC. There is at least one available DAC which includes the dual-strobed input data latches suggested for direct data bus interface; I would expect to see others appearing in future designs, both monolithic and hybrid.

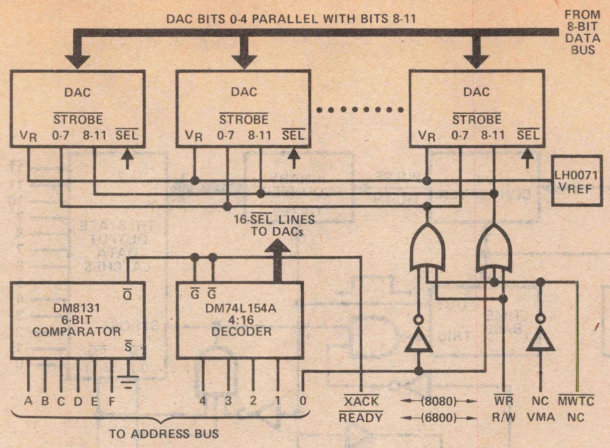

FIGURE 22. Parallel-Conversion DDU for 6800 or 8080

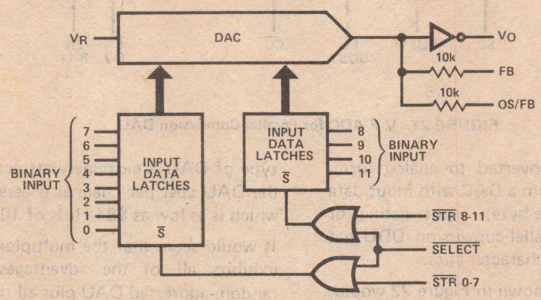

FIGURE 23. DAC for Parallel-Conversion DAU

Table 9. Comparison of Three Types of DAU

Features of DAU 16-Channel, 12-Bit	Conventional Random-Addressed	Parallel-Conversion Without S&H	Multiplexed With Memory
Approx. Component Cost (100s) (based on a $25 ADC)	$9.38	$26	$11
Approx. Power Dissipation	2.8W	4.3W	3.5W
Data Bandwidth/Channel $t_{conv} = 50\mu s$ t_{acq} (S&H) = $10\mu s$	200Hz	10Hz (tracking: $t_{conv} = 4\mu s$)	200Hz
Data Access Time	$60\mu s$	$< 0.5\mu s$	$< 0.5\mu s$
Software	$60\mu s$ delay or subroutine and return on flag	as memory access	as memory access
Logic Interface Complexity	9 DIP	6 DIP	13 DIP
No. of IC Packages			
ADC Requirement		TRI-STATE buffered output data latches	

RMS Converters and Their Applications

National Semiconductor
Application Note 180
John T. Lee
Hybrid Special Products
February 1977

Introduction

A true RMS converter is a device which converts a signal (DC, AC, AC+DC) to its equivalent DC heating value. These devices are useful in fundamental measurements of virtually all waveforms.

SOME BASICS ABOUT RMS CONVERTERS

I. What is the RMS Value of a Waveform?

The Root Mean Squared (RMS) value of a waveform is a fundamental measurement of that waveform: it is a measure of the waveform's heating value when applied to a resistor.

A fundamental theory of Fourier Analysis states that any periodic function may be represented in a trigonometric series. This series is a sum of sinusoidal components having different frequencies and amplitudes. These components are all multiples of the fundamental frequency. Thus, for a periodic function, the power content (also its mean-squared value) in the period T is defined to be:

$$\text{mean square value} = \frac{1}{T}\int_{-T/2}^{T/2} [f(t)]^2 dt = \sum_{n=-\infty}^{\infty} |Cn|^2$$

where the Cns are the complex Fourier coefficients of the function. It is seen that if $f(t)$ is a voltage or a current waveform, then the mean square value represents the average power delivered by $f(t)$ to a 1 ohm resistor. Summing its discrete components, one can obtain the power content of the signal. A graph of these components vs frequency is known as a power spectral density plot.

The RMS value is defined to be:

$$\text{RMS} = \sqrt{\frac{1}{T}\int_0^T [f(t)]^2 dt}$$

Thus, one can see that the RMS value is just the square root of the mean square value.

Since the mean square value of a periodic function is the sum of the mean square value of its discrete harmonics (without regard to their phases) it is seen that any signal with the same mean square value (thus RMS value) will dissipate the same amount of energy, over a period, in a resistor.

Whereas periodic signals may be completely described by their amplitudes, phases, and frequencies, random signals are those where future behavior cannot be predicted. Random signals may only be described by quantities such as the RMS value, power spectral density, and probability distribution. If for a random signal there exists a statistical value such as the RMS that is independent of time, then this signal is said to be stationary. The RMS value of any stationary zero mean random signal is equal to the standard deviation of the signal.

Whereas periodic signals have a discrete power density spectrum, random signals have a continuous spectrum. The RMS value of a random signal may be defined to be:

$$\text{RMS} = \sqrt{\lim_{T\to\infty} \frac{1}{T}\int_0^T f(t)^2 dt}$$

For a random signal, then, it is necessary to break the signal up into many narrow bands in order to investigate its power spectral density.

II. Why RMS Converters? Why Not Average Detect?

Since the mean square value (hence RMS) measures the power content of a signal, it provides a universal scale of measurement. An RMS measurement will give the intensity of a random phenomenon when averaged over a time interval. Besides periodic signals, phenomena such as acoustic noise, electrical noise, and mechanical vibration may be characterized. It is seen that instruments that read RMS values would be highly desirable.

Until recently, due to the high cost of RMS converters, most AC voltmeters did not read the RMS value of a waveform. Instead, they were average reading and RMS calibrated. This is done by taking the Mean Averaged Value (MAV) and multiplying by a factor of 1.11. This calibration is accurate only for measuring sinewaves. However, if the signal is not a pure sinewave, this type of instrument could lead to great errors. For example, such meters would read about 11% low on gaussian noise and about 11% high on symmetrical square waves. Note that if one knew beforehand that the waveform to be measured consisted of symmetrical square waves the meter could be calibrated accordingly. However, this meter would hardly be useful for anything else. Also, since many signals may change waveform during measurement, it would be impossible to try to calibrate the meter.

An example of a varying waveform would be the output of a ferroresonant line voltage regulator. The waveform could change from a sinewave to a square wave; when the output is a sinewave the average type meter would read correctly, however when the output is a square wave the meter would read in error of as much as 11%.

Another example would be the voltage from an SCR controlled circuit. An averaging meter would read correctly only during 180° condiction angle; it would read in error of 51% at 45° conduction angle.

Yet another example would be the output of an audio system during intermodulation testing. The true RMS value is insensitive to the ratio of frequencies, while the average value is highly sensitive to this ratio. Table I compares normalized readings between RMS and average detecting type meters. It is seen that whenever a waveform other than sinusoidal is to be measured, an RMS type meter should be used.

Table I
A Comparison of RMS and AVG Detecting Type Meters

Waveform		RMS	AVG
Sine		1	1
SCR Cond ∡	180°	1	1
	90°	0.707	0.5
	45°	0.301	0.15
Gassian Noise		δ^*	$0.89\delta^*$
Zero Based Pulse Train	10% duty cycle	$A/\sqrt{10}$	A/10
	1% duty cycle	A/10	A/100

* δ = standard deviation = RMS value

TABLE I. A Comparison of RMS & AVG Detecting Type Meters

III. What Kinds of RMS Converters Are There?

There are basically three methods of RMS measurements:

1. **Thermal.** This method is achieved by converting an unknown voltage or current into heat in a known value of resistance.
2. **Direct Computing.** From the definition of RMS,

$$\text{RMS} = \sqrt{\frac{1}{T}\int_0^T f(t)^2 dt}$$

we can see that the RMS value may be determined by first squaring the waveform, then averaging it, and then taking the square root. This method is illustrated in Figure 1.

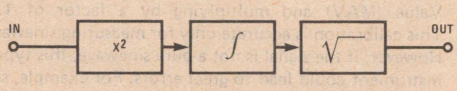

FIGURE 1. Direct Computing Type RMS Converter

3. **Implicit Computing.** This scheme is similar to the second one with the square root performed by feedback and the squaring done by log method. This method is illustrated in Figure 2.

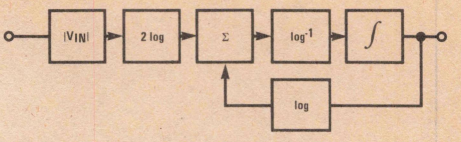

FIGURE 2. Implicit Computing Type RMS Converter

Of the three methods mentioned above, the Implicit Computing method is by far the most desirable — since a converter of this type can achieve great accuracy, wide bandwidth, high dynamic range, and low cost. The LH0091, National Semiconductor's true RMS converter, is such a unit.

SPECIFICATIONS

An ideal RMS converter would have infinite crest factor response, infinite bandwidth, and no errors due to conversion. Since this is not yet an ideal world, the performance of a practical converter will be discussed.

A practical converter should have sufficient bandwidth to respond to the entire spectrum of the measured signal; it should also have adequate crest factor response and accuracy to meet the particular application. Thus, these are important characteristics of an RMS converter.

1. **Crest Factor.** Crest Factor is the peak signal value divided by the RMS value. In general, the higher the crest factor a signal has, the higher the conversion error will be for a converter. This is due to internal circuit limitations. However, most signals encountered in measurement do not have high crest factors. For example, sinewaves have a crest factor of 1.414; triangular waves have CF of 1.73; for an SCR output, the CF varies from 1.414 to 3 as power output varies from 100% to 10%. One of the few waveforms which has high crest factor is noise; however, the crest factor of common noise is 3 or less for 99.7% of the time. The probability of a gaussian noise having a crest factor greater than 4 is 0.01%.

   A zero based pulse train is one of the rare waveforms which can have very high crest factors; such a pulse train with a 1% duty cycle will have a crest factor of ten. Using the high crest factor connection, the LH0091 will respond to signals with crest factor of 10 with typically no more than 0.2% error.
2. **Accuracy.** The accuracy of a converter is in reality its conversion error. Error is the amount by which the actual DC output differs from the theoretical value. It is customary to define error as a sum of a fixed offset term and a percent of reading term. For the LH0091, both the unadjusted and the adjusted total errors are specified; they are 20 mV ± 0.5% and 0.5 mV ± 0.05% respectively.

3. **Frequency Response.** The frequency response of a computing type RMS converter has an upper and a lower bound; on the low frequency end, it depends on the size of averaging capacitor; on the high frequency end, it depends on internal circuitry. Since this type of converter uses an RC filter for averaging, the RC time constant is critical for low frequency response. The RC time constant should be much greater (10 times or more) than the period of the lowest frequency component of the signal. For the LH0091, the RC time constant is simply the product of a 10 kΩ resistor and the external capacitor. Low leakage capacitors should be chosen.

4. **Frequency for Specified Adjusted Error.** This is the frequency below which the output will maintain the adjusted accuracy (specified for sinewaves). For the LH0091, the device will maintain the adjusted accuracy to 70 kHz, typically, for a 7 Vrms input.

5. **Frequency for 1% Additional Error.** This is the frequency below which the device will have an additional error of less than 1% of the initial reading (midband). This is also specified for sinewaves. This frequency is typically 200 kHz for a 7 Vrms input with the LH0091.

APPLICATIONS

RMS converters may be used in measurement of virtually any waveform. The examples below are only a few of the many possible applications.

A. Spectrum Analysis

Spectrum analysis is useful in characterizing random phenomena, identifying sources of mechanical vibration and noise. It is also used in characterizing the energy content of a signal. The RMS converter may be used in such an application.

As shown in Figure 3, the signal is passed through a tunable bandpass filter, and then it is read by the RMS converter. The output from the RMS converter represents the energy content in the narrow band of frequencies. If this procedure were repeated many times (each time changing the center frequency of the filter) we would have the power spectral density of the signal.

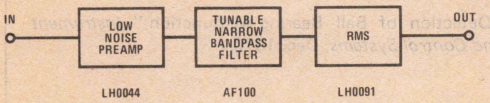

FIGURE 3. Application of the RMS Converter in Spectrum Analysis

B. Total Harmonic Distortion Meter

A simple and low cost total % harmonic distortion meter is shown in Figure 4.

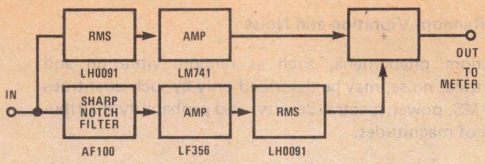

FIGURE 4. Total Distortion Meter

It is seen that the amplitude of the signal from which the fundamental has been rejected is divided by the amplitude of the composite signal; thus the output is a measure of total harmonic distortion.

C. Noise Meter

A complete noise meter is shown in Figure 5. Note that this meter will indicate the total noise within the frequency band of interest. However, if a tunable filter were added, one could plot the noise spectrum of the environment, thus being able to identiry the sources of noise.

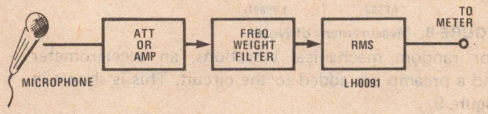

FIGURE 5. Noise Meter

D. Current Measurement

A current meter capable of measuring complex current waveforms is shown in Figure 6. Note that since the RMS converter is used, virtually any current waveform may be measured. Examples of such current waveforms are pulse train, SCR, and noise.

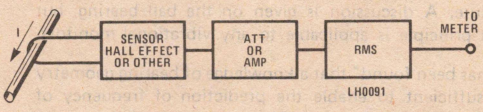

FIGURE 6. Current Meter

E. DVM AC Interface

Another application of the RMS converter would be an AC interface to a DVM. With such an interface, a DVM may be used to measure complex signals. Since most computing type RMS converters have relatively low input impedance, a buffer should be added as shown in Figure 7.

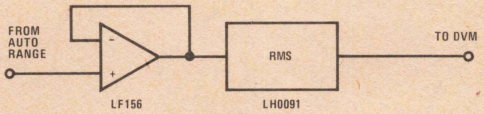

FIGURE 7. DVM AC Interface

F. Random Vibration and Noise

Random phenomena, such as random vibration and electrical noise, may be described only by such quantities as RMS, power spectral density, and probability distribution of magnitudes.

The spectral density of a wide band random signal is defined to be the mean square value of the signal per unit bandwidth. It is seen that we can obtain a kind of spectral density by dividing the RMS value (band limited) by the square root of the noise bandwidth, where:

$$\text{noise} = E/\sqrt{\Delta f} \text{ volts/Hz}^{1/2}$$

The result can be interpreted as simply the RMS noise voltage in 1 Hz of bandwidth. Thus wideband electrical noise may be measured as shown in Figure 8. If the filter in Figure 8 is tunable, then it would be possible to plot the spectral density of the signal.

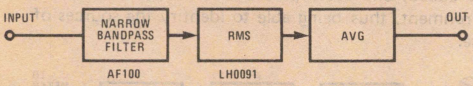

FIGURE 8. Measurement of Noise

For random mechanical vibrations, an accelerometer and a preamp are added to the circuit. This is shown in Figure 9.

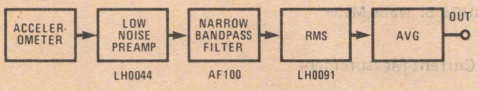

FIGURE 9. Application of the RMS Converter in Random Vibration

G. Ball Bearing and Other Vibrational Failure Monitor

A very interesting application of the RMS converter is in the monitoring of ball bearing and other vibrational failure. A discussion is given on the ball bearing, but the principle is applicable to any vibrational monitors.

It has been found* that a knowledge of bearing geometry is sufficient to enable the prediction of frequency of fault-induced vibration. There are natural frequency formulas relating directly to bearing geometry. When vibration is generated by impact due to defects, the impact frequencies are usually much lower than the natural frequency of the outer bearing race. Thus the natural frequencies are brought to life. An example of this would be a bell of 200 Hz natural frequency being struck several times a second: the corresponding plot of the oscillation would tend to exhibit 200 Hz and ignore the striking frequency.

It is possible to monitor the fundamental frequency of the outer race. However, it may be necessary to monitor a band of frequencies, depending on the application. If an RMS reading is taken to detect the normal operation level of a new bearing (after a few hours of operation) a safe level may now be set. Thereafter, if the RMS level exceeds the set safe level, an alarm could be triggered. A circuit for such a function is shown in Figure 10. If the bandpass filter is tunable, diagnosis of the failure can be performed.

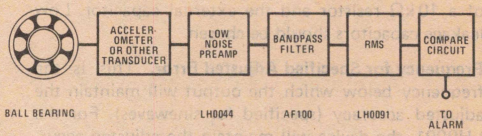

FIGURE 10. Ball Bearing Failure Monitor

* See *Vibration & Acoustic Measurement Handbook*, Blake & Mitchell, Spartan Books, 1972 and "Detection of Ball Bearing Malfunction," *Inst. & Control*, Dec. 1970.

CONCLUSION

In conclusion, it has been found that the RMS converter is a versatile component. Applications range from complex current waveform measurement to ball bearing failure monitor. The examples cited in this note are but a few of the many possible applications.

REFERENCES

Blake and Mitchell, *Vibration and Acoustic Measurement Handbook*, Spartan Books, 1972.

Fieldhouse, *Techniques for Identifying Sources of Noise & Vibration*, Spectral Dynamics Corp, San Diego, CA, 1969.

Hsu, Hwei P., *Fourier Analysis*, Simon & Schuster, 1970.

Magrab and Blomquest, *The Measurement of Time-Varying Phenomena*, Wiley, 1971.

Oliver, *Electrical Measurement & Instrumentation*, McGraw Hill, 1971.

Pennington, Dale, *Basic Shock and Vibration Theory*, Endevco Corp., San Juan Capistrano, CA, 1966.

"Detection of Ball Bearing Malfunction," *Instrument and Control Systems*, Dec. 1970.

Digital Telephony and the Integrated Circuit CODEC

National Semiconductor
Application Note 215
Jim Smith
February 1979

INTRODUCTION

Before beginning a detailed discussion on PCM CODECs (Pulse Code Modulation COders/DECoders), it is important to consider the nature of voice frequency communication and the digital telephone network. This, of course, is the primary application of any PCM CODEC. Basically, a digital telephone network uses switching and transmission techniques that are generally considered appropriate for a digital computer rather than a telephone communications network. High speed digital logic, arithmetic logic units, extensive use of digital memories, etc., are important aspects of digital telephony. But the success and acceptance of digital techniques for switching and transmitting voice signals depends upon the viability of an efficient and cost effective analog-to-digital and digital-to-analog interface. Without such an interface, the message switching telephone network must remain, at least in part, an analog network.

Although patented in 1937 by Alex H. Reeves, (France), PCM was not used commercially until the 1950's. At that time, the Bell System used PCM in a transmission system designed to increase the message carrying capacity of short-haul cables. In this application, where the performance of FDM was considered inadequate, the voice signals were band-limited to 4 kHz, sampled and coded into digital words. These digital words were then time multiplexed with identical signals from 23 additional channels and transmitted over a single transmission cable pair. At the receiving end, the reverse operation took place and to complete a telephone conversation path, a symmetrical circuit arrangement was provided for voice communication in the opposite direction. This entire system was named channel bank and designated as D1. It used cable facilities designated as T1.

To the end user, the D1 channel bank system is 24 voice channels at either end of a T1 span and little attention to the channel bank system is necessary. No obvious switching functions are involved, and in fact, the telephone subscriber connected to a central office (CO) via a D1 channel bank is usually not aware of any alterations in the normal services from the CO.

The D1 system and its successors (up to D4) are strictly transmission systems that use digital coding and time division multiplexing to increase short-haul cable call handling capacities. For that application, the important advantages of PCM are not exploited. The use of PCM in long-haul transmission for noise-free signal regeneration and in switching systems to eliminate electromechanical circuits has never been fully developed because alternative approaches were usually more economical. The advantages of PCM did not appear to warrant its use when compared to the cost.

The trend, however, is beginning to change. The introduction of the integrated circuit CODEC is only the beginning of the "siliconization" of the digital telephone network line interface circuit. This fact and the inherent advantages of PCM telephony have prompted closer examination of digital telephony for all phases of the telecommunications network.

DIGITAL TELEPHONY

A realizable digital telephone network can be configured in several different ways, but basic to any approach is the need to represent the original signal as discrete time samples, the desire to multiplex many signals together to increase the call capacity of switching and transmission equipment and finally, to digitize the time samples so that degradation of the message signal will be eliminated as it is transmitted and switched through several different systems. Although time sampling and digital encoding are usually only performed once for any particular connection, multiplexing can be performed at several different points in the network. In a shared CODEC system, the first level of multiplexing will be analog, usually a pulse modulation technique like pulse amplitude, pulse width or pulse position modulation (PAM, PWM or PPM). This arrangement is necessary because the shared CODEC must convert the time samples of several different channels into a continuous digital bit stream. The time samples of 24 or 30 channels are multiplexed together onto a single wire or hyway and transmitted to the CODEC for coding. Obviously, the complementary procedure is required for decoding. A single channel CODEC arrangement, however, uses a CODEC at each line interface channel. The voice band-limited signal is time sampled and directly converted to a digital signal prior to digital multiplexing with other similar channels. This arrangement eliminates the often troublesome and noise sensitive pulse modulation multiplexing and allows the flexibility of directly interfacing both voice and data channels with the digital network.

Regardless of the CODEC arrangement desired, the concept of representing the original signal as time samples is fundamental to digital telephony. It is this sampling process that allows a continuous analog signal to be digitally coded and time division multiplexed onto a multi-channel transmission and switching hyway. It is, therefore, relevant to present a brief description of the sampling theorem.

Simply stated, a band-limited analog signal that is time sampled at twice the highest frequency in the band of interest will yield regularly spaced samples that contain all of the information of the original signal. It is important to band-limit the input signal because time sampling will cause aliasing of unwanted high frequencies down into the band of interest. Consider, for example, the Fourier transform of a band-limited signal f(t):

$$f(t) = \int_{-1/2T}^{1/2T} F(f)e^{j2\pi ft}df$$

where the bandwidth in hertz of f(t) is equal to 1/2T and the function $F(f) = 0$ for $f > 1/2T$ or $f < -1/2T$. Since F(f) is only defined between $-1/2T$ to $1/2T$, it can be represented by the Fourier series:

$$F(f) = \sum_{n=-\infty}^{\infty} C_n e^{j2n\pi ft}$$

for $-1/2T < f < 1/2T$. The coefficients in this summation are defined by:

$$C_n = \int_{-1/2T}^{1/2T} TF(f)e^{-j2n\pi fT}df$$

Comparing this to the original Fourier transform for f(t), it is clear that the constant C_n represents the value of f(t), times a constant, at T intervals:

$$C_n = T\,f(-nT)$$

Time samples of f(t), C_n, taken at twice the highest frequency in the passband, will represent the original signal f(t) times a scale factor. Substituting C_n back into previous formulas yields:

$$f(t) = \sum_{n=-\infty}^{\infty} f(nT)\frac{\sin \pi/T\,(t-nT)}{\pi/T\,(t-nT)}$$

The time samples, taken T seconds apart, can be reconstructed into the original function f(t) if they are passed through an ideal low pass filter [impulse response h(t)] with gain T and bandwidth 1/2T hertz.

$$h(t) = \frac{\sin \pi/T\,t}{\pi/T\,t}$$

In telephony, the frequency band of interest is 300 Hz to 3 kHz. To allow worldwide transmission of digital telephone signals, the 8 kHz sample frequency has been established as an international standard. This allows a signal bandwidth of DC to 4 kHz to be represented by time samples taken every 125 μs. Although the time sampled signal could now be multiplexed with other similar signals, it is more appropriate to consider the single CODEC approach of encoding to the digital PCM format before any time division multiplexing (TDM) is performed.

PULSE CODE MODULATION

Standard PCM telephony uses one of two non-linear transfer characteristics to compand the time sampled analog input signal into a compressed range of 8-bit digital output words. The reasons for companding are simple. The amplitude probability distribution of telephone message signals is not uniform. There is a heavy concentration of small amplitude signals where a relatively low distortion level would be required to insure an adequate signal-to-quantizing distortion (S/D) ratio. Secondly, the dynamic range of the signals encountered in a typical telephone message may span 40 dB. A uniform CODEC — one that does not compand input signals into a compressed output range — would experience an S/D ratio degradation of 40 dB for weak signals as compared to strong ones. Since low level signals need low level distortion and high level signals can tolerate higher levels of distortion, it would be desirable to devise a digital coding scheme that provided a constant S/D over a wide dynamic range. PCM is such a scheme.

As mentioned earlier, two coding characteristics are in general use today. The first, named μ-255, is used in North America and parts of the Far East while the second, the so called European A-law, has been adopted by most of the remaining countries in the world. The goal of attaining a constant S/D performance over a wide dynamic range means that distortion levels must be proportional to signal amplitude for all signal levels. This implies the use of a logarithmic compression law modified to overcome the mathematical difficulties of using a true logarithmic transfer function. The μ-law, normalized for a coding range of ±1 is defined as:

$$F(x) = \mathrm{sgn}(x)\frac{\ln(1+\mu\,|x|)}{\ln(1+\mu)} \qquad -1 \le x \le 1$$

where μ is generally set equal to 255. The A-law characteristic, again normalized for a ±1 coding range, is defined as:

$$F(x) = \mathrm{sgn}(x)\frac{1+\ln A\,|x|}{1+\ln A} \qquad \frac{1}{A} \le |x| \le 1$$

$$F(x) = \mathrm{sgn}(x)\frac{A\,|x|}{1+\ln A} \qquad 0 \le |x| \le \frac{1}{A}$$

where A is generally set equal to 87.6.

The definitions for the μ and A coding laws define smooth curves. In practice, however, these laws are usually implemented as piecewise linear approximation transfer characteristics. One such approximation for the μ-law characteristic is comprised of 15 linear segments centered about the origin of the transfer curve *(Figure 1)*. The first segment, which passes through the origin, contains 32 uniform steps corresponding to 32 digital code words, 15 positive, 15 negative and two codes for

zero. Here is where a primary difference between the μ and A-laws occurs. While μ-law defines two codes for zero volts and is best described as having a mid-tread zero point, the A-law defines no code for zero, a mid-riser condition *(Figure 2)*. The two zero codes of the μ-law characteristic actually represent one normal step that is divided into two half-steps by the y-axis of the transfer curve. These half-steps represent the lowest resolvable signal of the μ-law characteristic. The next two linear segments, one positive and one negative, each contains 16 uniform steps, but the step size or difference between voltage outputs for each incremental change of the input digital word will represent a two-fold change in output voltage when compared to the same incremental change in the first segment. Thus, the "graininess" of the transfer characteristic has doubled. This process of doubling step size with each higher segment continues until the step size in the final two μ-law segments is 128 times larger than the step size in segment one. This arrangement provides 255 discrete output voltages, 127 positive, 127 negative and zero volts.

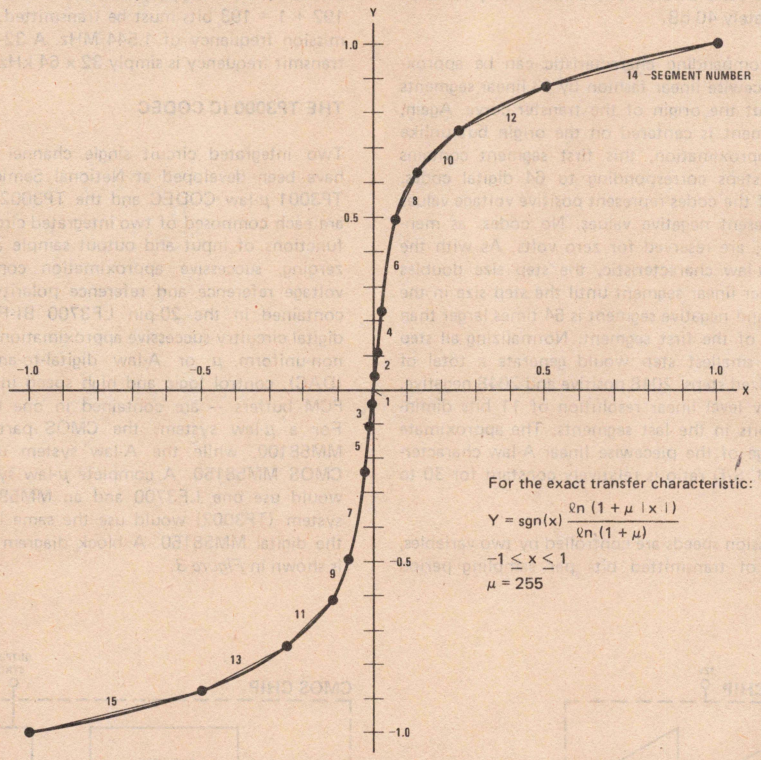

For the exact transfer characteristic:

$$Y = \mathrm{sgn}(x)\,\frac{\ln(1+\mu\,|x|)}{\ln(1+\mu)}$$

$-1 \leq x \leq 1$

$\mu = 255$

FIGURE 1. μ-Law Transfer Characteristic (Exact and Piecewise Linear Approximation Characteristics)

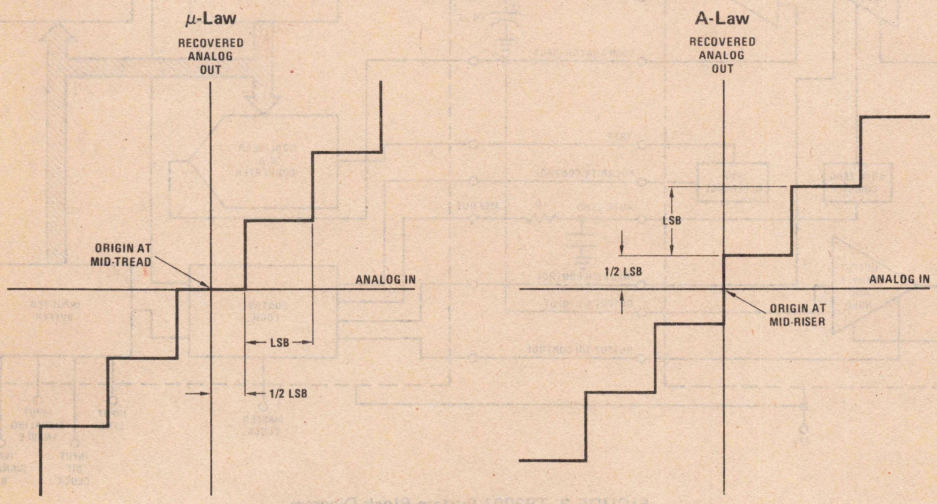

FIGURE 2. Transfer Characteristics Around Zero

If all steps of the piecewise linear approximate μ-law characteristic were normalized to the lowest resolvable step, the first 1/2 step, there would be 8159 positive and 8159 negative normalized steps in the entire transfer curve. This is equivalent to a low level resolution that could only be matched with a 13-bit linear coding characteristic and a dynamic range of approximately 78 dB. Of course, companding will mean a lower resolution at the higher signal levels (only the equivalent of 6 bits in the last segments). However, this μ-law characteristic does yield an S/D ratio that is nearly constant for approximately 40 dB.

The A-law companding characteristic can be approximated in piecewise linear fashion by 13 linear segments centered about the origin of the transfer curve. Again, the first segment is centered on the origin but unlike the μ-law approximation, this first segment contains 64 uniform steps corresponding to 64 digital codes. Thirty-two of the codes represent positive voltage values and 32 represent negative values. No codes, as mentioned above, are reserved for zero volts. As with the 15-segment μ-law characteristic, the step size doubles for each higher linear segment until the step size in the last positive and negative segment is 64 times larger than the step size of the first segment. Normalizing all step sizes to the smallest step would generate a total of 4096 normalized steps, 2048 positive and 2048 negative. This is a low level linear resolution of 11 bits diminishing to 5 bits in the last segments. The approximate dynamic range of the piecewise linear A-law characteristic is 66 dB. S/D ratio is relatively constant for 30 to 35 dB.

PCM transmission speeds are controlled by two variables, the number of transmitted bits per sampling period (called a frame) and the period of the sampling signal. The generally accepted length of a single PCM word is 8 bits. Because sampling is performed at an 8 kHz rate, the period of the sampling signal is 125 μs. A single PCM channel must transmit 8 bits of digital information every 125 μs. This is a transmit (or receive) frequency of 64 kHz. Twenty-four channels would normally require a 24 times increase in the single channel frequency but the Bell System uses a multiplex scheme that combines 24 8-bit PCM words with one framing bit for every 125 μs frame. In one frame, 24 x 8 = 192 + 1 = 193 bits must be transmitted. This is a transmission frequency of 1.544 MHz. A 32-channel system transmit frequency is simply 32 x 64 kHz = 2.048 MHz.

THE TP3000 IC CODEC

Two integrated circuit single channel PCM CODECs have been developed at National Semiconductor. The TP3001 μ-law CODEC and the TP3002 A-law CODEC are each composed of two integrated circuits. The linear functions of input and output sample and hold, autozeroing, successive approximation comparison, DAC voltage reference and reference polarity switching are contained in the 20-pin LF3700 BI-FET™ IC. The digital circuitry-successive approximation register (SAR), non-uniform μ or A-law digital-to-analog converter (DAC), control logic and high speed input and output PCM buffers — are contained in one CMOS package. For a μ-law system, the CMOS part is the 28-pin MM58100, while the A-law system uses the 22-pin CMOS MM58150. A complete μ-law system (TP3001) would use one LF3700 and an MM58100. An A-law system (TP3002) would use the same linear part with the digital MM58150. A block diagram of the TP3001 is shown in *Figure 3*.

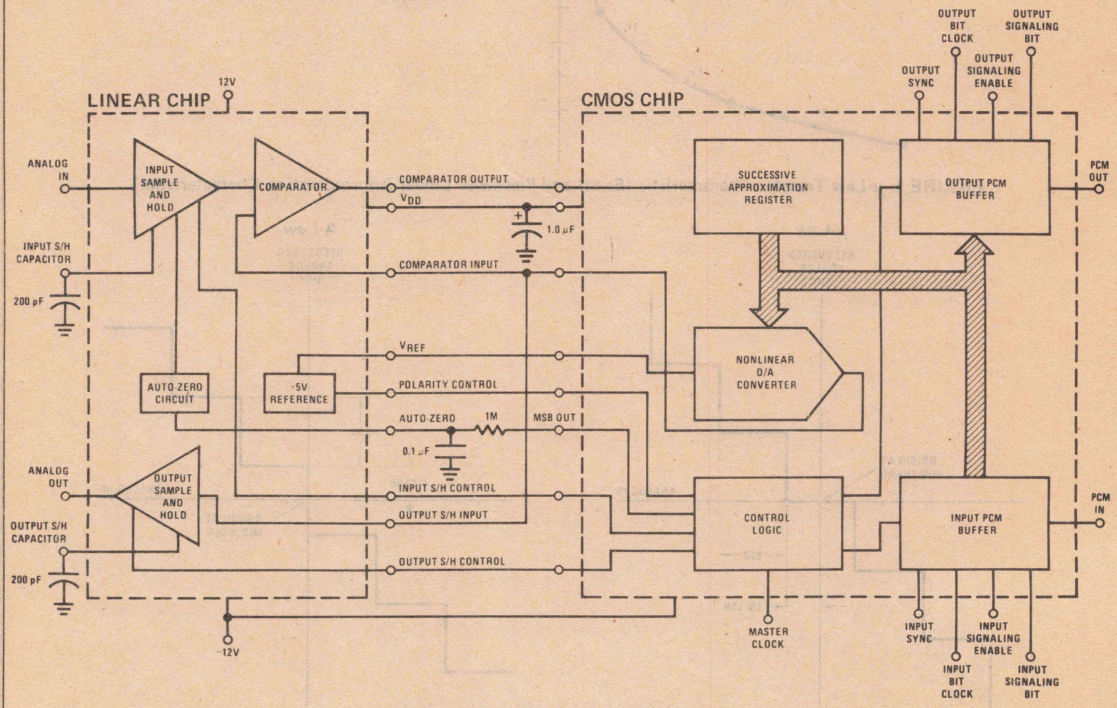

FIGURE 3. TP3001 System Block Diagram

Because sampling will cause aliasing of high frequencies down into the passband, all analog signals applied to the TP3000 must be low pass limited to frequencies below 4 kHz. The NS active filter AF133 is designed for this low pass filter function. Likewise, analog output signals from the TP3000 output will contain sidebands around multiples of the 8 kHz sampling frequency, as well as the sin x/x distortion introduced by the output sample and hold amplifier. A low pass filter with inverse sin x/x correction will restore the TP3000 analog output to its pre-encoding appearance. The NS AF134 is a filter for that function.

Auto-zero circuitry is required for the input sample and hold amplifier to guarantee that the LSB of an idle channel is confined to the first few codes of the transfer characteristic. Without this confinement, idle channel noise, crosstalk enhancement and distortion would increase. Auto-zero for the output sample and hold amplifier is not required since DC voltage offset at the CODEC analog output can be removed by AC coupling the output to the low pass filter.

The auto-zero technique used is a simple time averaging of the PCM code sign bit. By averaging the toggling of this bit over a time constant of approximately 100 to 1000 ms, and adjusting the DC offset control of the input sample and hold to minimize the detected DC component, the PCM output can be forced to contain equal numbers of positive and negative codes over an extended period of time.

The TP3000 voltage reference is a band-gap bipolar reference *(Figure 4)*. The device develops its voltage reference by differencing the voltage drop across two forward biased base emitter transistor junctions. The equation defining this voltage is:

$$V_{REF} = C\frac{kt}{q}\ln\frac{8A}{A}$$

where C is an amplification constant, k is Boltzmann's constant, q is the electric charge, and A is the emitter junction area. By controlling the area ratio of the two base emitter junctions and compensating for temperature effects with a reverse temperature coefficient introduced via a resistor network, the output voltage of this circuit will be virtually free of significant long term drift.

The DAC used in the TP3000 is a modified grounded ladder R/2R structure *(Figure 5)*. As it turns out, the binary division of a reference voltage afforded by this configuration exactly matches the chord end points of the A-law PCM transfer characteristic. With a slight modification, it will also fit the μ-law characteristic. To achieve the piecewise linear approximation, 16 uniformly spaced taps are brought out from each R resistive element. These taps form the source of an MOS analog switch which is the first level of an all MOS switch tree decoder. Proper decoding of a PCM digital word will select a single DC voltage from the DAC ladder.

The DAC is a grounded ladder structure so that the highest accuracy codes are developed near the ground reference. This configuration will develop positive output voltages with a positive reference applied and negative voltages with a negative reference. The generation of a positive and negative reference voltage is achieved by using a high accuracy polarity switch on the output of the band-gap reference.

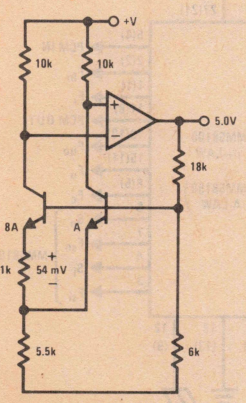

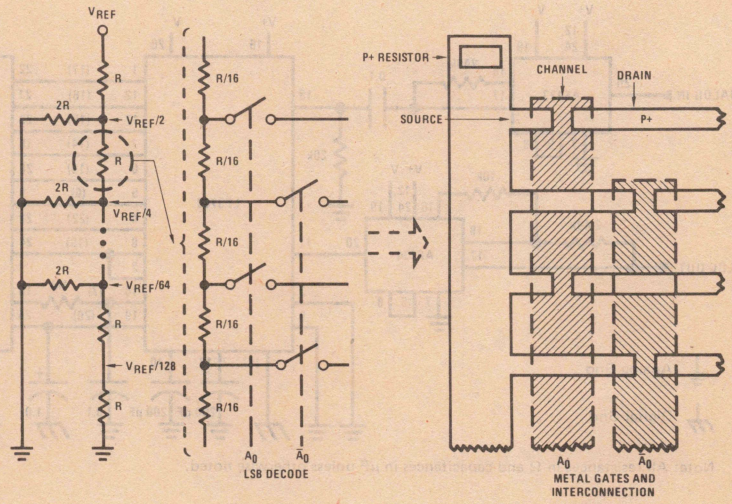

FIGURE 4. The CODEC Voltage Reference

FIGURE 5. MOS DAC for Companding A-Law

The operation of the TP3000 CODEC is clearly described in the data sheet and will only be briefly covered here. For maximum flexibility, the TP3000 is designed with separate clocks and control inputs for PCM transmission, PCM reception and, in the TP3001 μ-law CODEC, signaling control. A master clock input, F_c, is also provided so that internal CODEC timing functions are not dependent upon PCM bit clocks. An asynchronous μ-law system, with signaling, would need direct independent control of all clocks and controls. A synchronous system, with separate signaling arrangements, would combine many of the separate clocks and controls.

PCM data is clocked into the TP3000 with the F_{bi} clock. Clocking occurs on the positive clock edge if F_i is at logic high. Hence, the clocking is enabled by the input word clock F_i. F_{bi} can be any frequency between 64 kHz and 2.048 MHz, but F_i must be 8 kHz. The negative going edge of F_i initiates the decode interrupt cycle of the TP3000.

PCM data is clocked from the TP3000 with clock F_{bo}. Clocking will occur on the negative edge if F_o is at logic high. Like F_{bi}, F_{bo} can be any frequency from 64 kHz to 2.048 MHz, but F_o must be 8 kHz. The positive edge of F_o begins the shifting out of the prior PCM word and begins the encoding of a new analog sample.

APPLICATIONS

Several applications will be shown starting with 3 simple controller circuits for testing the TP3000 CODECs and finishing with a sophisticated telephone line card for 8 subscribers. While telephone applications are heavily stressed, any voice frequency signal acquisition system can be adapted from the information given here. But, before covering the various applications of the TP3000 CODEC, let's examine a typical system arrangement, *Figure 6*.

The analog input signal is band-limited by the low pass filter AF133 before it is AC coupled to the analog input of the linear CODEC chip. Within the CODEC, the signal is time sampled, held, and converted to a serial PCM bit stream that is available on the PCM OUT pin of the digital CODEC chip. Simultaneously, a serial PCM bit stream can be clocked into the PCM IN pin where it will be converted to an analog voltage, sampled and held. This decoded analog signal is then filtered by low pass filter AF134 and becomes the recovered analog output signal.

For all of the applications covered in this note, the typical system arrangement is required for each CODEC in the application.

Test Controllers

Figure 7 shows the complete schematic for a two CODEC test controller. The control circuitry derives a 2.048 MHz PCM clock, a 128 kHz master clock (F_c) and two PCM word clocks. The PCM word clocks (F_o/F_i' and F_o'/F_i) are each high for only 8 of 256 clock cycles of the PCM bit clock. These two word clocks are, however, 180 degrees out of phase with each other so as to demonstrate the principle of time slot switching. Although not shown on the schematic, the logic power supply is +5V while CODECs and active filters are powered from ±12V. All supplies should be adequately bypassed.

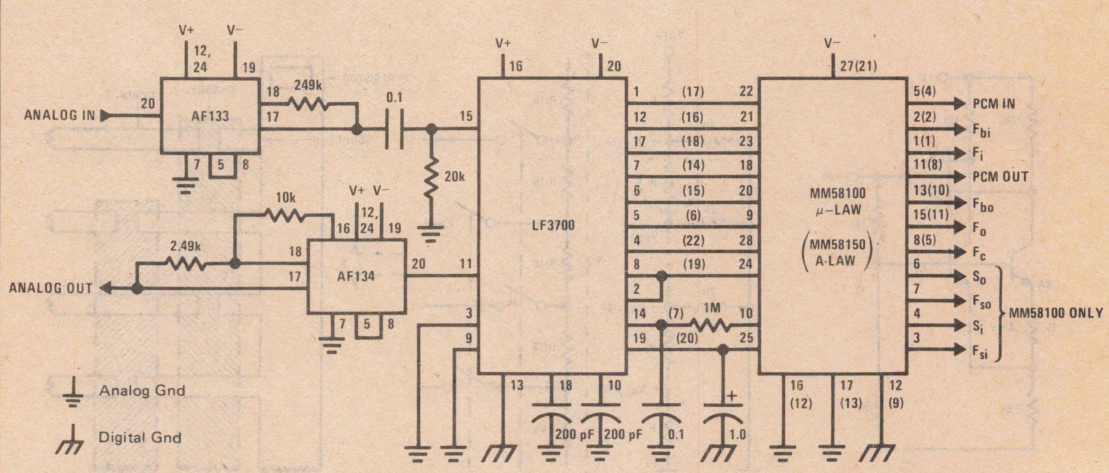

Note: All resistances in Ω and capacitances in μF unless otherwise noted.

FIGURE 6. Typical System Arrangement

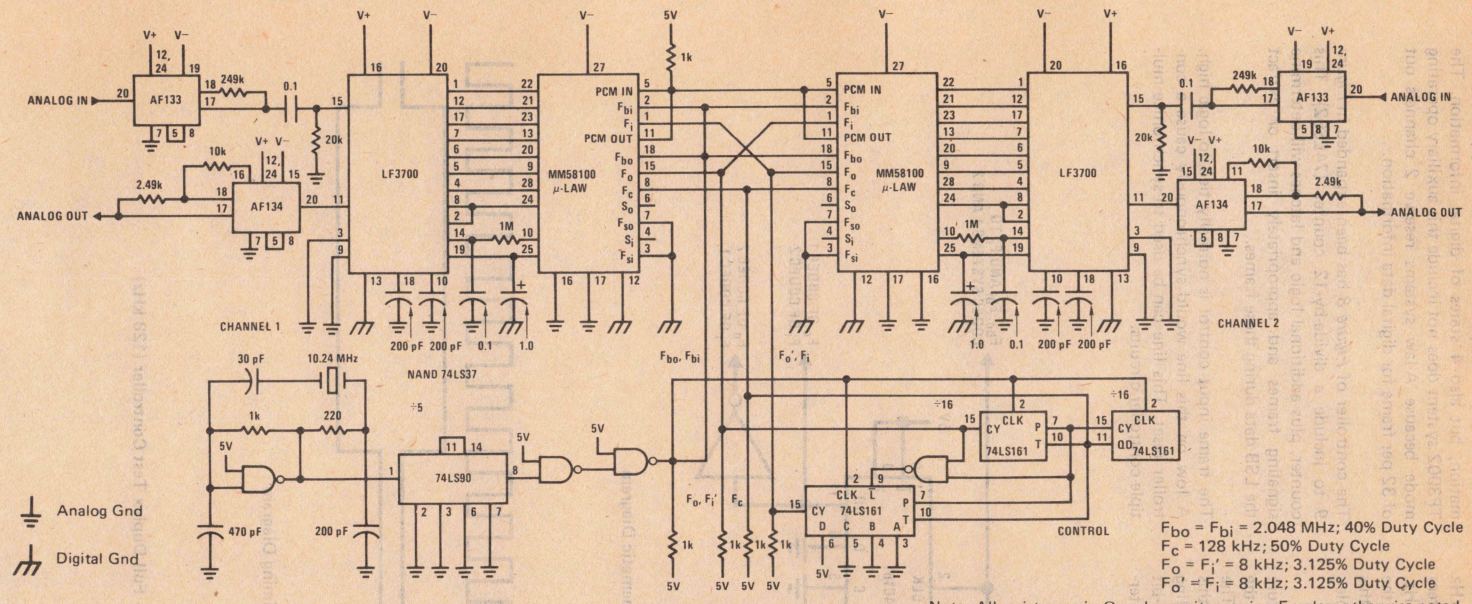

Schematic Diagram

$F_{bo} = F_{bi} = 2.048$ MHz; 40% Duty Cycle
$F_c = 128$ kHz; 50% Duty Cycle
$F_o = F_i' = 8$ kHz; 3.125% Duty Cycle
$F_o' = F_i = 8$ kHz; 3.125% Duty Cycle

Note: All resistances in Ω and capacitances in μF unless otherwise noted.

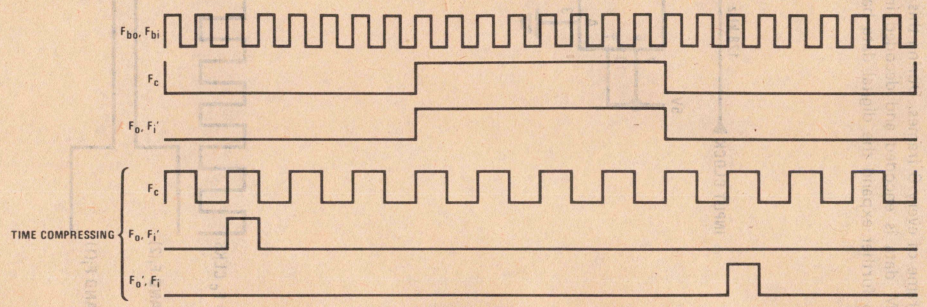

Timing Diagram

FIGURE 7. CODEC Test Controller(μ or A-Law — 2.048 MHz Clock)

Figure 8 utilizes the PCM bit clock flexibility of the TP3000 to greatly simplify the control of two CODECs. A single 4-stage CMOS counter (74C161) uses the 128 kHz master clock and PCM bit clock to derive the 8 kHz PCM word clocks. In operation, the first CODEC system will transmit to the second for 8 cycles of the 128 kHz, then the second CODEC transmits to the first for the next 8 cycles of the 128 kHz. The simplicity of this test controller will be exploited later for a full duplex system application.

The TP3001 CODEC system has as a necessary feature the ability to "rob" the LSB of a PCM word for the purpose of transmitting digital data information. The Bell System format for this operation is to rob this bit for 1 frame of every 6 frames. During this signaling frame, PCM data is encoded and decoded in a 7-bit format. To further expand the digital data base, alternate signaling frames are used to transmit either an A signal bit per channel or a B signal bit per channel. In this way, not only does a channel carry voice information, but also 4 states of digital information. The TP3002 system does not include this auxiliary operating mode because A-law systems reserve 2 channels out of 32 per frame for digital data information.

The controller of *Figure 8* has been expanded in *Figure 9* to include a divide-by-12 counter (74LS92). This counter, plus additional logic and latches will determine signaling frames and appropriately insert or extract the LSB data during these frames.

The frame input control is normally tied to logic high. A low on this line would synchronously cause a controller reset. This line can be used to synchronize multiple controller circuits.

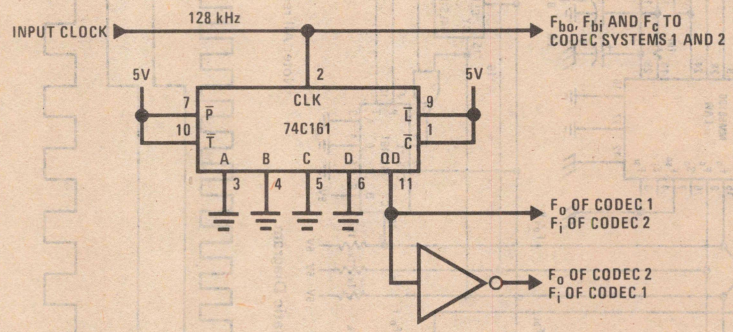

Schematic Diagram

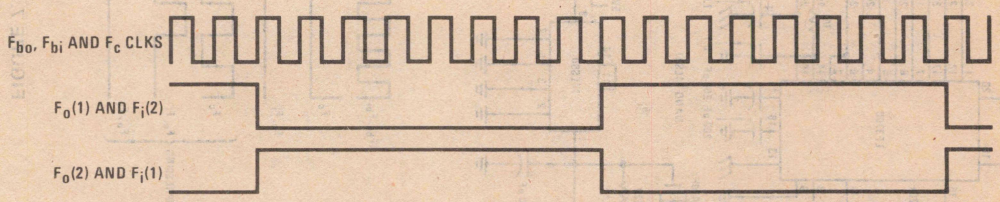

Timing Diagram

FIGURE 8. Single Channel – Full Duplex Test Controller (128 kHz)

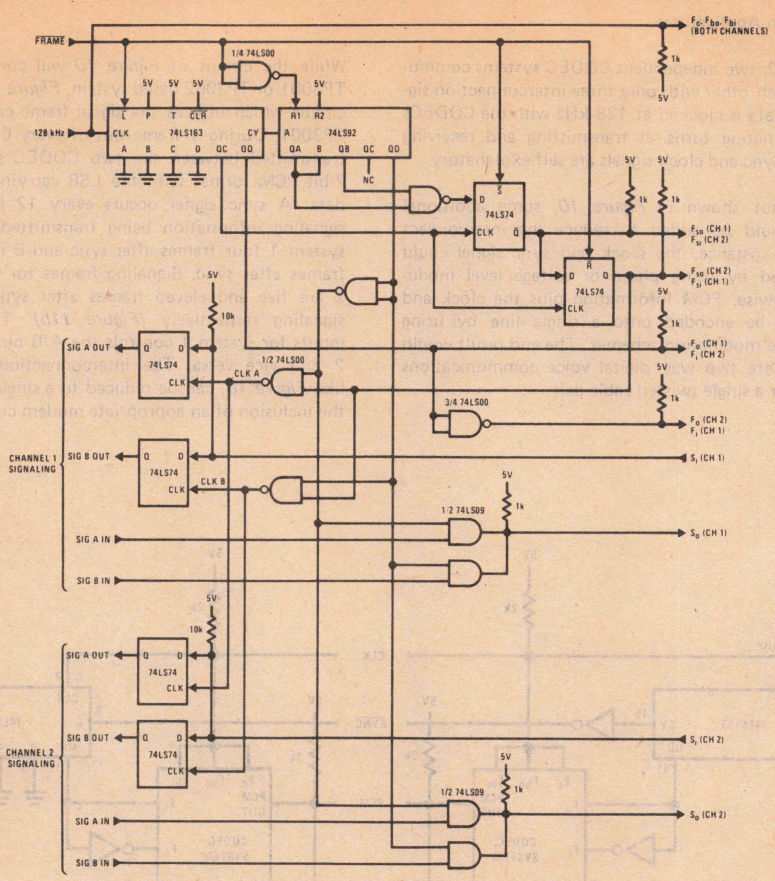

Schematic Diagram

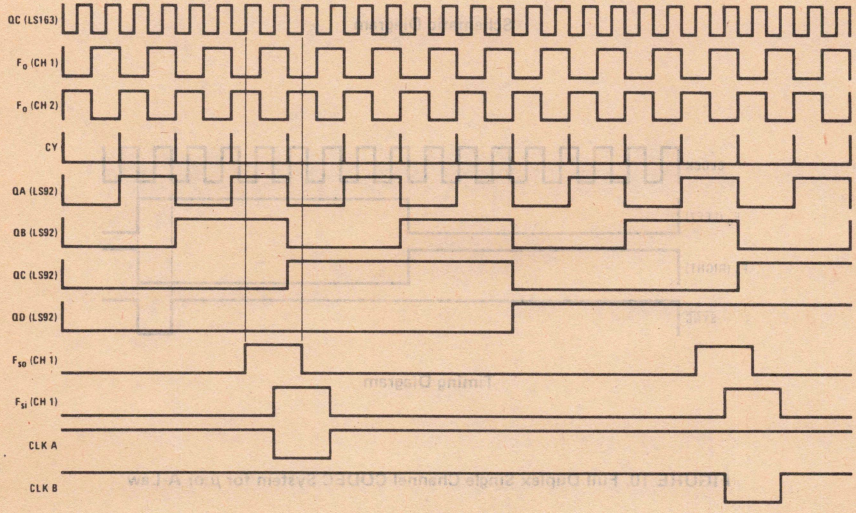

Timing Diagram

FIGURE 9. TP3001 CODEC Test Controller for μ-Law CODECs with Signaling (128 kHz Clock)

Transmission Applications

In *Figure 10*, two independent CODEC systems communicate to each other with only three interconnection signals. PCM data is clocked at 128 kHz with the CODECs taking alternating turns at transmitting and receiving PCM data. Sync and clock signals are self-explanatory.

Although not shown in *Figure 10*, some additional circuitry could be added to reduce the interconnect wiring. For instance, the clock and sync signal could be combined by using phase or voltage level modulation. Likewise, PCM information plus the clock and sync could be encoded onto a single line by using two or more modulation schemes. The end result would be a complete two way digital voice communications channel over a single twisted cable pair.

While the circuit of *Figure 10* will control either the TP3001 or TP3002 based system, *Figure 11a* is a control circuit which utilizes the signal frame capability of the TP3001. During 1 frame out of every 6, the PCM data transmitted between the two CODEC systems will be 7-bit PCM format with the LSB carrying signal A or B data. A sync signal occurs every 12 frames, with A signaling information being transmitted from CODEC system 1 four frames after sync and B information ten frames after sync. Signaling frames for CODEC system 2 are five and eleven frames after sync for A and B signaling respectively *(Figure 11b)*. The A/B signal inputs for system 1 controls the A/B outputs of system 2 and vice versa. The interconnection requirements, like *Figure 10*, can be reduced to a single wire pair with the inclusion of an appropriate modem circuit.

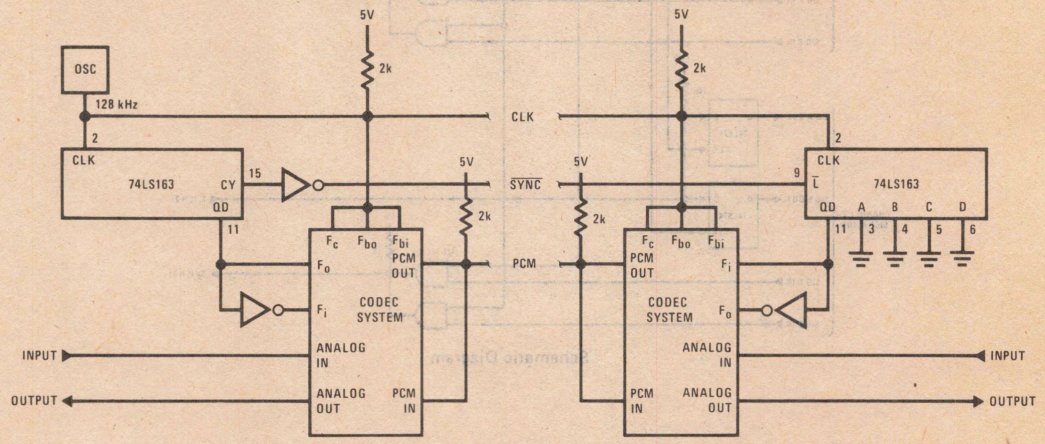

Schematic Diagram

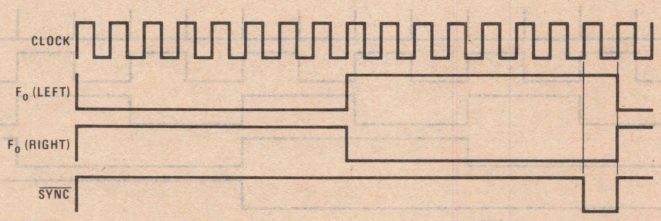

Timing Diagram

FIGURE 10. Full Duplex Single Channel CODEC System for μ or A-Law

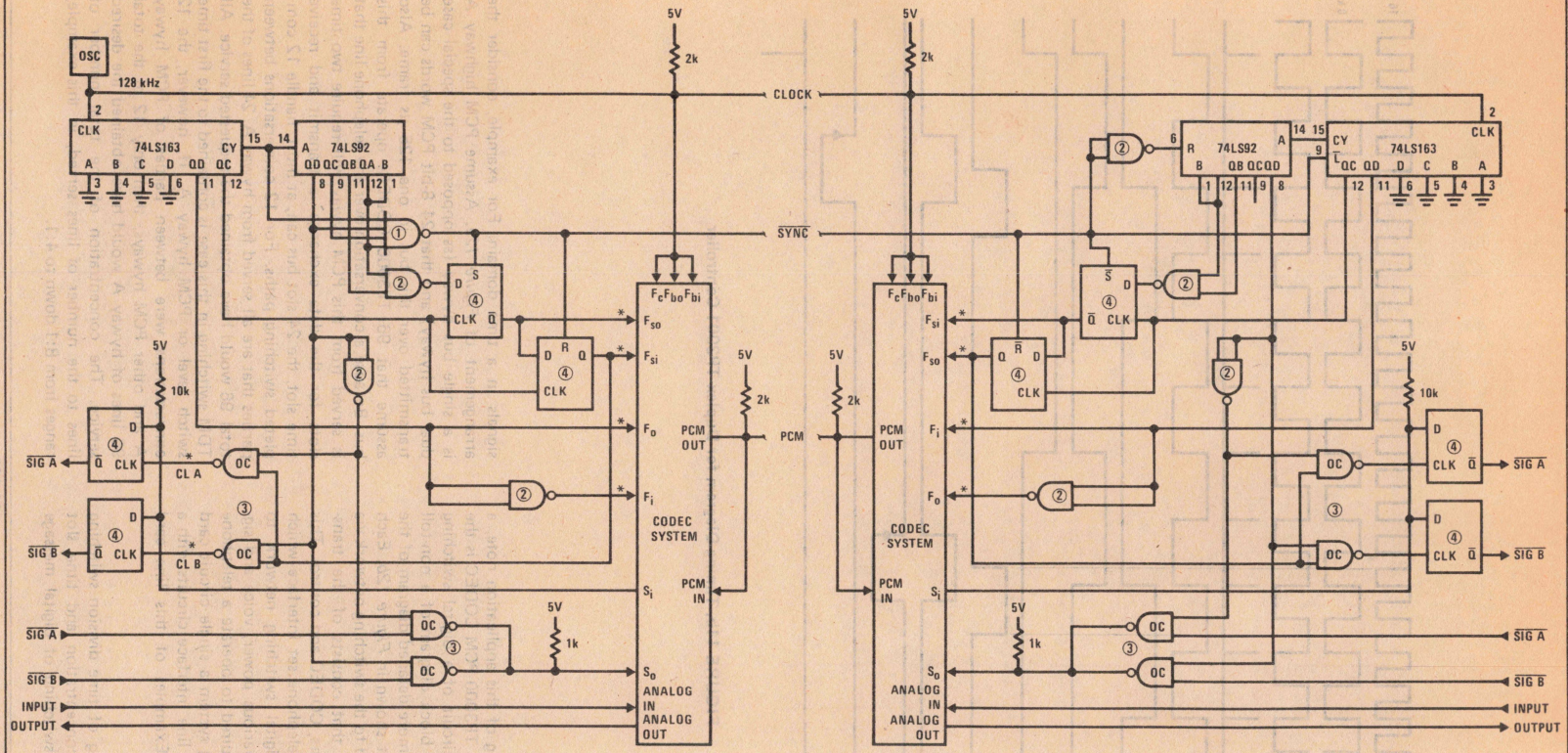

Note ① Dual 4 Input NAND: 74LS20
Note ② Quad 2 Input NAND: 74LS00
Note ③ Quad 2 Input NAND O.C.: 74LS03
Note ④ Dual D Latch: 74LS74
* 1kΩ pull-ups to 5V required.

FIGURE 11a. TP3001 Full Duplex Single Channel CODEC System for μ-Law (with Signaling)

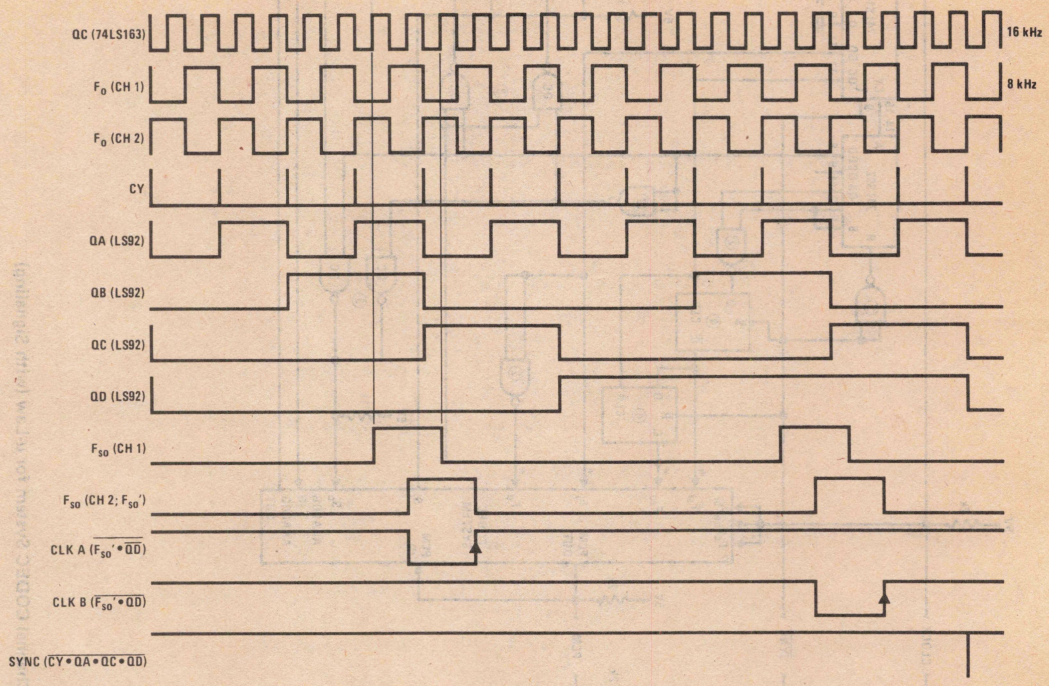

FIGURE 11b. Timing Diagram for Duplex TP3001 Controller

Switching Applications

As stated in the beginning of this application note, a primary application of the TP3000 PCM CODEC is the telephone line interface circuit of a digital switching network. *Figure 12a* is a block diagram of a non-toll switching network with a more detailed diagram of the actual line interface circuit shown in *Figure 12b*. Each telephone line is connected to the switching network via an interface port circuit that consists of the transmission hybrid, active filters, CODEC and control. This circuit is the system to telephone set interface which allows the completely digital switching network to control and process the various power, voice and signaling signals that are required to operate a telephone set. In a typical switching system a single circuit card would contain 4 identical line interface circuits with a single board controller. Examples of this line card arrangement will follow.

Basic to the understanding of time division switching is the concept of line concentration and time slot assignment to effect the switching of digital message signals in a time domain. For example, consider the arrangement of *Figure 12a*. Assume PCM highway A is a single bus hyway (as opposed to the special case dual bus hyway) and that 24 8-bit PCM words can be transmitted over this bus in one 125 μs frame. Also assume that 96 TP3000 CODECs operate from this bus. Because a conversation over any telephone line that is served from this PCM hyway will require two time slots for the data exchange, a transmit and receive time slot, the 24 slot bus can, at most, handle 12 completed switching paths. For 12 conversations between parties that are all served from hyway A, 24 lines of the total 96 would have obtained the requested service. All TDM switching in this case is contained to the first time switch level or PCM hyway A. If, however, the 12 conversations were between parties of PCM hyway A and other PCM hyways, then only 12 of the total 96 lines of hyway A would have obtained the desired service. The concentration of the total number of lines to the number of lines served, in this example, ranges from 8:1 down to 4:1.

Time division switching, as handled at the first switching level (hyway A), can be explained by considering a conversation between two parties served by hyway A. The system controllers may assign the call originator time slots 1 and 2 for the transmit and receive connections respectively. The space and time division switching network will transmit dial tone to this party by transmitting 8-bit samples of digital dial tone onto hyway A during time slot 2. Common control equipment, then, will collect dialed number information and process the information so as to ring the line of the called party. Of course, the common control may be required to transmit other call progress tones (busy tone, reorder, etc.) from the service circuits to the call originator via the space and time division switching network but, for this example, let's assume the call is completed. The called party, being served from PCM hyway A, will receive time slot assignments 2 and 1 for the transmit and receive connections. This is the opposite assignment made to the call originator. The result is PCM data being transmitted from originating to receiving party during time slot 1 and the reverse during time slot 2. A complete conversation path has been established.

This brief explanation of a very complex system is, at most, cursory. Concepts like time slot interchange, conferencing, digital gain control, etc. are beyond the scope of this application note. Hopefully, the concepts presented here will help the reader to reach an appreciation for the details of the following applications.

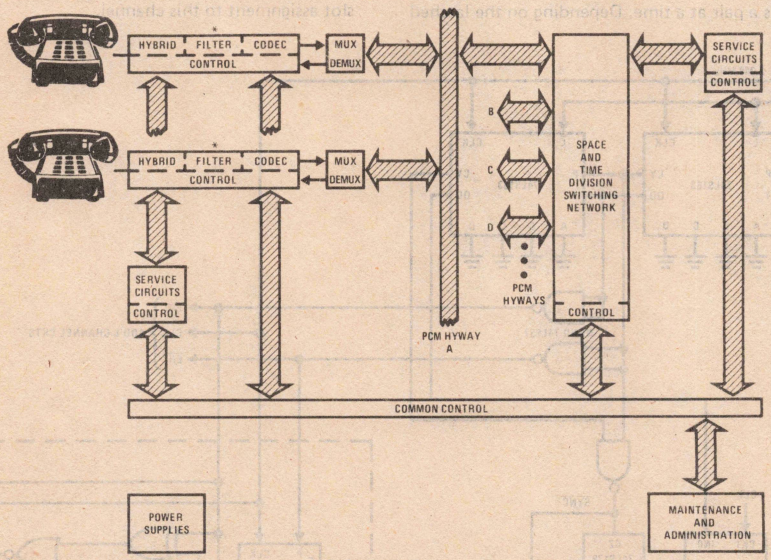

*Detailed schematic of the Hybrid, Filter, CODEC, Control block is shown in *Figure 12b*.

FIGURE 12a. Typical TDM Non-Toll Switching Network Block Diagram

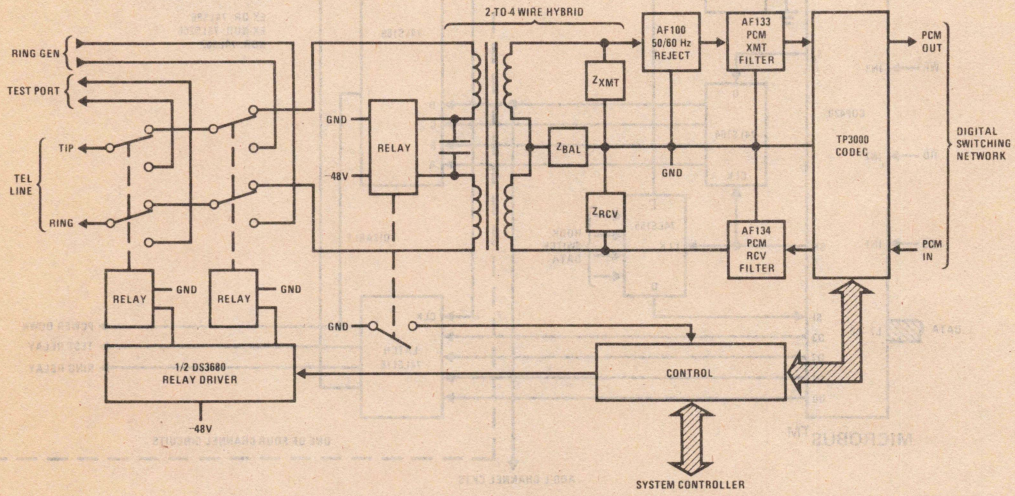

FIGURE 12b. Typical Telephone Line Interface Circuit for a Digital Central Office

Digital Line Cards

Figure 13 is a representation of a possible configuration for a switching system quad line card. The 4 CODECs controlled by the COP420 controller would interface 4 telephone subscribers to a PCM hyway of 32 time slots. The COP420 acts as the interface between the common system control and board level circuitry. This interface is shown as the MICROBUS™, but could easily be configured through a UART for serial communications. The board level control functions consist of monitoring the status of the 4 lines (hook switch inputs), assigning time slots, controlling the line test and ring relays and deactivating unused lines. Also under the direct control of the COP420 is the assignment of call originator or call receiver status. This last control is important to consider because time slots are assigned as a pair at a time. Depending on the latched state of bit D0, a particular CODEC may transmit PCM before receiving or receive before transmitting.

The operation of the quad card is based on a controller selected 74LS169 counter being synchronously preset during system frame sync (the beginning of time slot zero) to an assigned time slot number. From that point on in time it will begin to down count to zero and generate a time slot enable signal (if the power down line is low). Its associated CODEC is now enabled to communicate over the PCM hyway. The 74LS169 counter will continue to down count by wrapping around and will again enable the CODEC 32 time slots later. This operation continues until the COP420 either sends a power down command or a new time slot assignment to this channel.

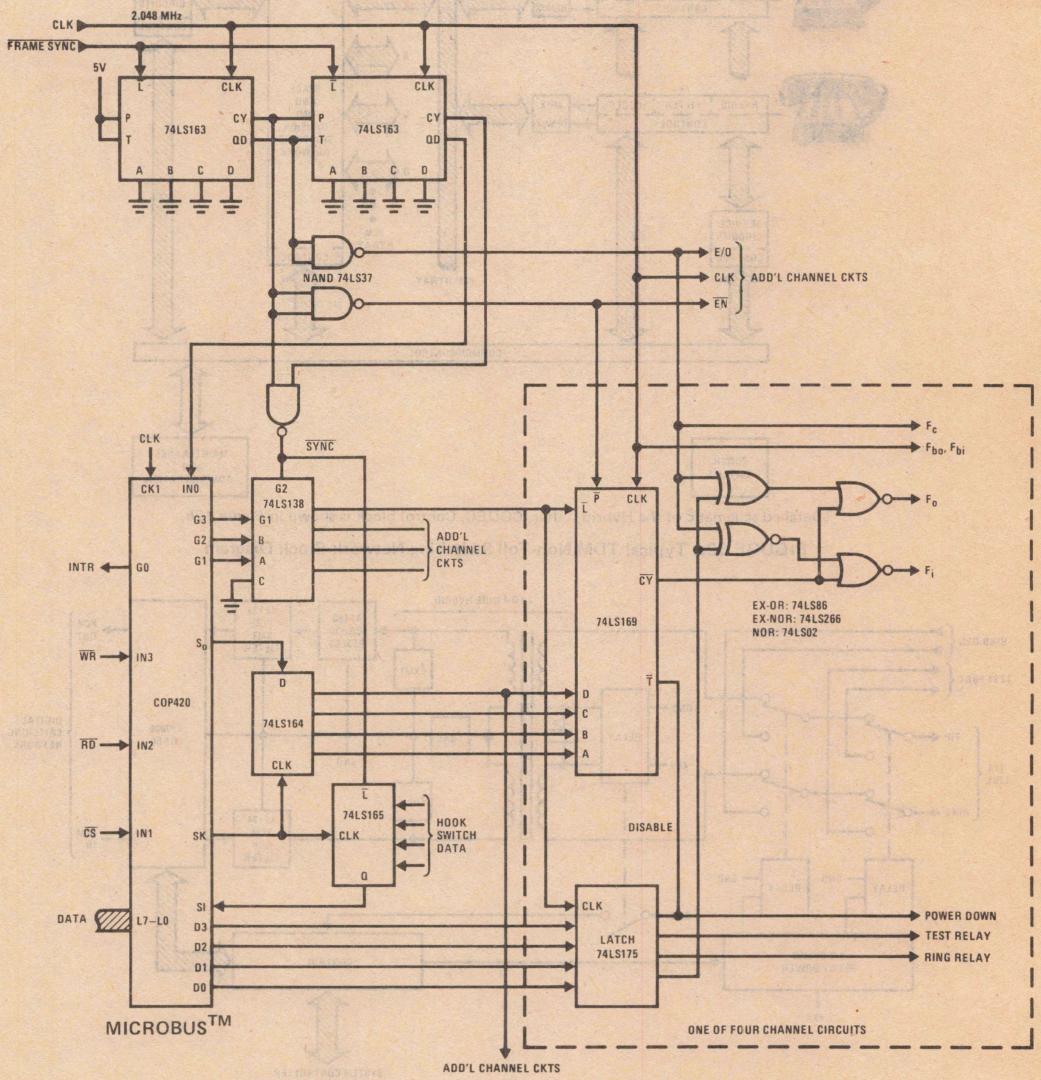

FIGURE 13. Quad Line Card — 32 Time Slot System

The octal line card of *Figure 14* is very similar to the previous example. As before, a synchronous counter, the 74LS169, is preset to a time slot number at the beginning of time slot zero. The counter then down counts to zero at which time a CODEC enable signal is generated. The significant difference here, however, is that the 74LS169 will be preset at the beginning of each frame. The individual time slot assignments have been latched on a per line basis. This scheme allows time slot counts that are not necessarily a power of 2. The 74LS169 counters, in this case, do not have to continuously wrap around to insure proper card operation. The result is a line card that can, with simple modification, operate on any time slot count from 1 to 32.

Figures 15 and *16* show the nature of the modifications required to alter the 24 time slot octal line card to 32 time slot operation *(Figure 15)*, and to provide the capability of assigning time slots on a non-paired basis *(Figure 16)*.

Note that in all of the line card examples, a minimum of interface is required between the line card and the main system. The PCM bit clock and in certain cases a 128 kHz master clock plus the frame sync signal are the only non-bus oriented signals that must be distributed. This simple board level interface coupled with the use of a flexible yet standard line control element (the COP420) makes these line card examples very sensible approaches for the digital switching network line interface card.

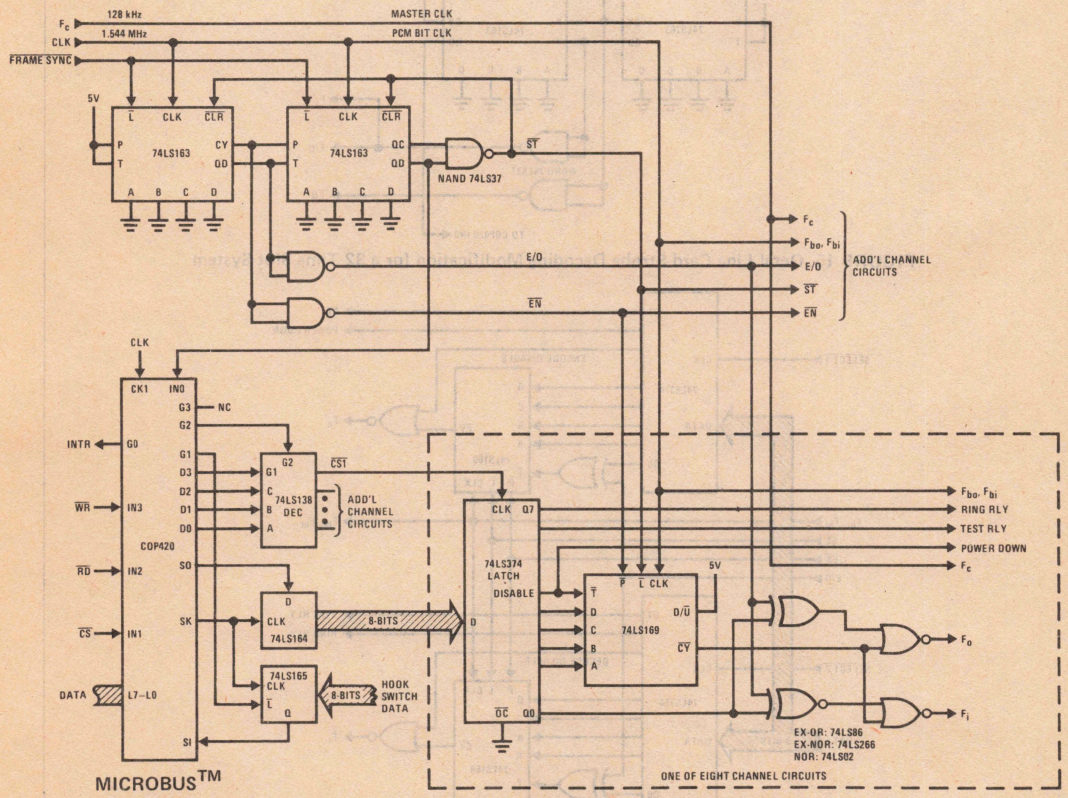

FIGURE 14. Octal Line Card — 24 Time Slot System

SUMMARY

While the intended purpose of this document is to introduce the telephony novice to the often complex structure of digital telephone networks, it is quite possible that the scope of the material covered may also be of interest to individuals with experience in the field. As for those readers with little or no interest in telephony, it is hoped that a basic understanding of the PCM CODEC in its natural environment will help the reader to develop applications in other areas.

REFERENCES

1. G. Cooper and C. McGillem, *Methods of Signal and System Analysis*. New York: Holt, Rinehart and Winston, Inc., 1967.
2. G. Kennedy, *Electronic Communication Systems*. New York: McGraw-Hill, 1977.
3. International Telegraph and Telephone Consultative Committee (CCITT) Sixth Plenary Assembly, Orange Book, Vol. III-2, "Line Transmission". Geneva, 1977.
4. Bell Telephone Laboratories, *Transmission Systems for Communications*. Winston-Salem, NC: Western Electric Company, Inc., Technical Publications, 1971.
5. J. Cecil, E. Chow, J. Flink, J. Solomon, C.G. Svala and T. Svenson, "A Two-Chip PCM CODEC for Per-Channel Applications", *International Solid-State Circuits Conference Digest*, Feb. 1978.

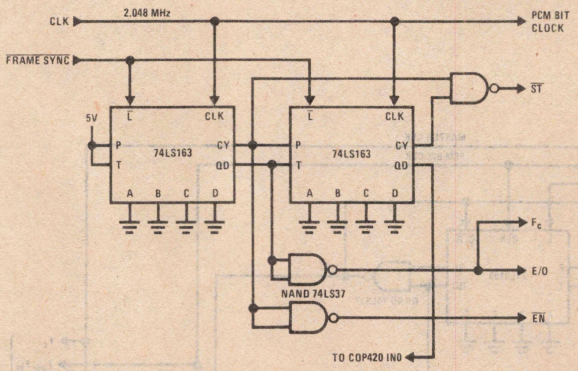

FIGURE 15. Octal Line Card Strobe Decoding Modification for a 32 Time Slot System

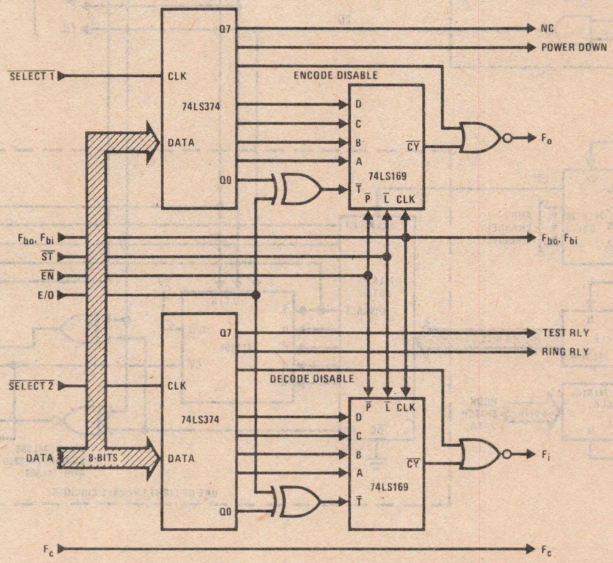

Note: When using this channel circuit for 8 lines, replace decoder 74LS138 with 74LS154 and use all 4 lines of port D for input code. G2 will still act as enable line.

FIGURE 16. Channel Circuit for Independent Time Slot Assignment

Gain Measurements in a CODEC System

National Semiconductor
Application Note 219
Jim Smith
January 1979

INTRODUCTION

For many engineers, designers and technicians, the integrated circuit CODEC will be their first introduction to the transmission measurement and specification techniques of the telephone industry. A quick glance at the National Semiconductor TP3000 CODEC data sheet will reveal specification units that are not common in the general analog equipment world. To initiate the non-telcom designer, this application note will attempt to explain both the obvious and the obscure aspects of telecommunication transmission measurement techniques and units as they apply to the single channel CODEC system.

DEFINITIONS

The primary unit of measure in the telephone industry is the decibel. Used to denote absolute or relative voltage or power levels, ratios of voltage or power levels and even to calibrate between systems of nonmatching impedances, the decibel is a flexible measurement unit. Let's review the various forms of this unit of measure.

1. Decibel, dB: A unit of measure used to express the ratio between two power levels, P1 and P2. It is numerically defined as:

$$dB = 10 \log (P1/P2) \qquad (1)$$

By the application of Ohm's law and proper substitution, the dB can also represent the ratio between two voltage or current levels, at a constant impedance. For example, P1 can be expressed as $V1^2/Z1$ and P2 as $V2^2/Z2$. By substitution,

$$dB = 10 \log (V1^2/Z1)/(V2^2/Z2)$$

if Z1 = Z2, this reduces to,

$$dB = 10 \log V1^2/V2^2$$

$$dB = 10 \log (V1/V2)^2$$

$$dB = 20 \log V1/V2$$

2. dBr or TLP: This is the power relative to a reference point. In the United States, the term Transmission Level Point (TLP) is applied in place of dBr. 0dBr or 0TLP refers to a system point of zero relative transmission level.

3. dBm: This is the absolute power level referenced to 1 mW. It is numerically defined by equation (1) when P2 is set equal to 1 mW,

$$dBm = 10 \log \frac{P1 \text{ (in watts)}}{10^{-3}}$$

For a constant impedance of 600 Ω, the dBm is also defined as,

$$dBm = 10 \log \frac{V^2/600}{10^{-3}} = 10 \log \frac{V^2}{0.6}$$

To find the 0dBm voltage for an impedance of 600 Ω,

$$0dBm = 10 \log \frac{V^2}{0.6}$$

$$\frac{0}{10} = \log \frac{V^2}{0.6}$$

$$\log^{-1} 0 = \frac{V^2}{0.6} = 1$$

$$V^2 = 0.6$$

$$V = 0.775 \text{ Vrms}$$

4. dBm0: This is the power level (expressed in dBm) referred to a transmission level of 0TLP. In all cases, the following equation applies,

$$\text{ABS PWR (dBm)} = \text{REL PWR (dBm0)} + \text{REF PWR (dBr or TLP)} \qquad (2)$$

Figure 1 is an example of how this equation is applied.

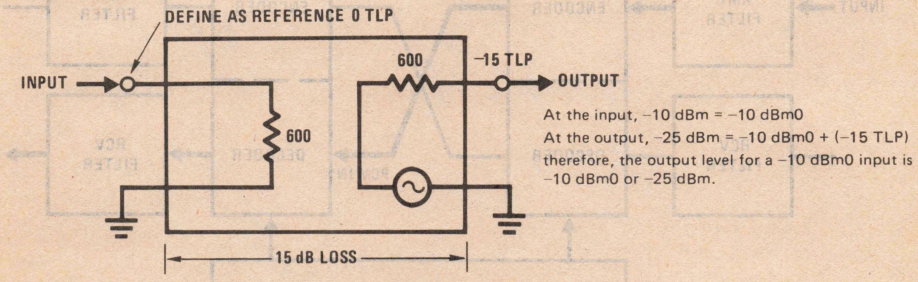

FIGURE 1. Blackbox Gain Considerations

5. dBmp: This is the absolute power level as measured after a filter which compensates for the characteristics of the human ear. The weighting curve is shown in *Figure 2*. The psophometric filter is normally used for A-law systems only.

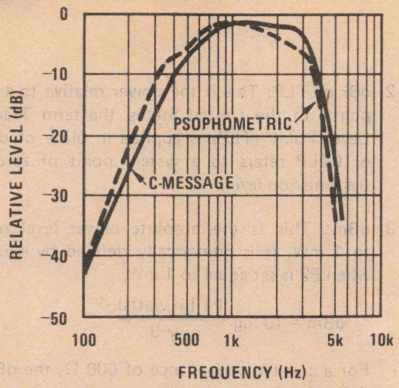

FIGURE 2. C-Message and Psophometric Filter Characteristics (from AT&T "Notes on Distance Dialing")

6. dBrnc: In the USA, the dB is often modified with the suffix rnc. The rn stands for reference noise while the c signifies that the measurement is through a C-message filter *(Figure 2)*. By definition,

0dBrn = −90 dBm and of course, 0dBrnc = −90 dBmc.

Any of the absolute power levels can easily be expressed "referred to the 0TLP" by simply adding a 0 to the unit of measure and adjusting the numerical value accordingly.

CODEC MEASUREMENTS

Figure 3 is a block diagram of a typical CODEC set-up for making end-to-end analog measurements. In this arrangement, the CODECs are assumed to have identical encode and decode characteristics and all filters are arranged for unity passband gains. Of course, this situation is seldom attained, but gain adjustment considerations will be covered later in this note.

Before end-to-end analog measurements can be made using the *Figure 3* schematic, the relative power levels of the input and output, referenced to a zero transmission level point, must be calculated. These dBr or TLP values will then be used to calculate the dBm0 levels used for testing and measurement purposes.

As previously stated in equation (2),

ABS PWR (dBm) = REL PWR (dBm0) + REF PWR (dBr or TLP)

All that is necessary is to calculate the appropriate TLP numbers. For an example, assume the TP3000 CODEC is to be tested per *Figure 3*. The nominal 0dBm0 decoder output level for this CODEC is 2.70 Vrms which is directly related to the internal reference voltage (5.5V). The ratio of this relative voltage level to the voltage level at 0dBm (600 Ω) will yield the approximate TLP value for the TP3000 CODEC analog input or output.

$$20 \log \frac{2.70 \text{ Vrms}}{0.775 \text{ Vrms}} = 10.84 \text{ TLP} \qquad (3)$$

This means that to encode a 0dBm0 passband signal with the TP3000 CODEC, an absolute signal level of 10.84 dBm must be applied to the unity gain transmit filter's input,

REL PWR (0dBm0) + 10.85 TLP = ABS PWR (10.84 dBm)

Also, the output of the TP3000 decoder, under 0dBm0 signal conditions, will appear as a 10.84 dBm signal at the output of the unity gain receive filter. Measurement adjustments, to compensate for this 10.84 TLP value, would be required when testing the TP3000 CODEC per the *Figure 3* set-up.

The circuit shown in *Figure 4* is basically the *Figure 3* arrangement with transmit and receive gain adjustments shown. Again the TP3000 is the assumed CODEC and all filters are set for unity passband gains. By adjusting the transmit and receive gains accordingly, the 10.84 TLP value can be cancelled so as to allow direct measurement of absolute input and output signal levels. Normal application of any CODEC system would require a configuration similar to *Figure 4*.

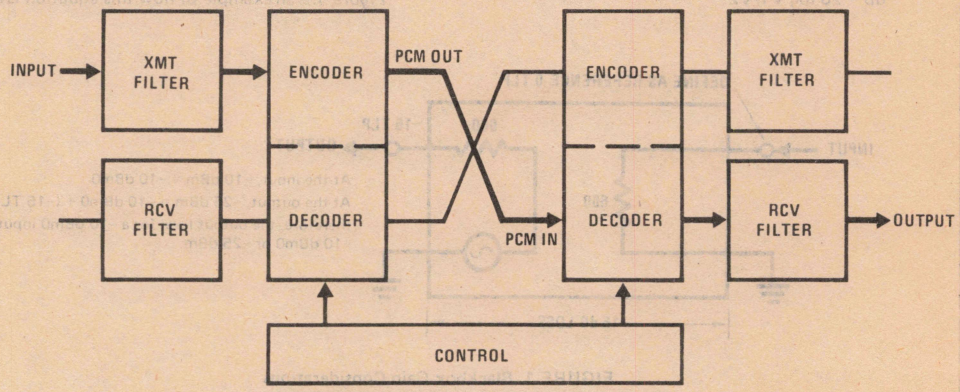

FIGURE 3. Typical Analog End-to-End Measurement

The gain adjustments for *Figure 4* can be computed as follows,

$$\text{XMT GAIN ADJUST} = \log^{-1} \frac{10.84\ \text{TLP}}{20} = 3.484 \quad (4)$$

$$\text{RCV GAIN ADJUST} = \log^{-1} \frac{(-10.84\ \text{TLP})}{20} = 0.287 \quad (5)$$

These adjustments would approximately set 0dBm equal to 0dBm0 for the TP3000 CODEC. This gain adjustment can usually be accommodated in the transmit and receive filters. The National Semiconductor AF133 filter, for instance, provides a single resistor adjustment for transmit gain while the AF134 filter provides a single resistor adjustment for receive attenuation.

THE DIGITAL MILLIWATT

While the gain calibrations detailed above are simple and straightforward, they do rely on knowing the value of the CODEC system input and output TLP. A preferred method of adjusting filter gains to achieve a particular TLP value (e.g. 0TLP) at the CODEC system's input or output is shown in *Figure 5*.

The arrangement of *Figure 5* utilizes a digital tone source to uniquely define a μ or A-law digital milliwatt. This signal source outputs a digital data stream that represents a 1 kHz sinewave of 0dBm0 signal level. When switch S1 is in position A, the receive gain is adjusted until the analog output level is at the proper level (usually 0dBm). Switching S1 to position B, and applying a known absolute signal level to the analog input line (usually 0dBm) will allow the transmit gain to be adjusted for the correct analog output level (e.g. 0dBm). By using this approach to calibrate each CODEC channel in a system, any combination of channel to channel interconnection will result in similar end-to-end gain characteristics.

A schematic of the *Figure 5* block diagram is shown in *Figure 6*. Transmit gain adjustment is controlled by the AF133 filter using resistor R1. Receive filter (AF134) attenuation adjustment is controlled by resistors R2 and R3. V_{IN} is supplied from a 0dBm, 1 kHz sinewave generator and V_{OUT} is measured via an rms voltmeter calibrated for dBm (600 Ω). A 128 kHz 5V clock source (square wave) plus a 74LS161 counter is the only control circuit needed for the CODEC and digital signal source.

The digital signal source is clocked from the CODEC PCM bit clock. One of the 4 PROM output lines (output 1) is a source for μ or A-law digital idle code; a signal that toggles between the lowest positive and negative code words at a 4 kHz rate. PROM output 2 is a source for μ or A-law digital milliwatt code as defined by the CCITT and tabulated in the TP3000 data sheet on page 3. PROM outputs 3 and 4 are unused in the basic digital signal source configuration. The user of this circuit can program these outputs for up to 128 bits of μ and A-law digital signals per output. One application of the unused PROM outputs may be the programming of a steady idle code signal (all ones for μ-law and alternating zero/one for A-law) and a 1 kHz,

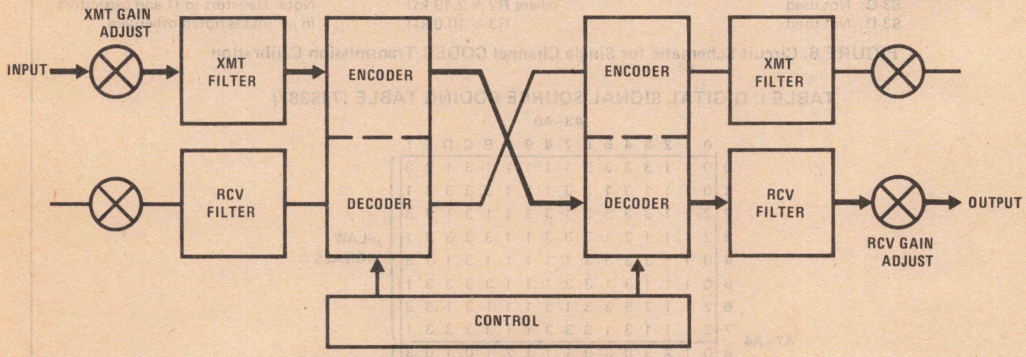

FIGURE 4. Gain Adjustments in the End-to-End Arrangement

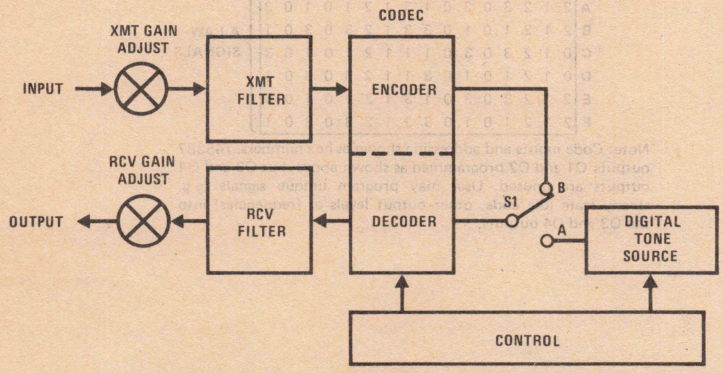

FIGURE 5. Single Channel CODEC Calibration Arrangement

−10 dBm0 signal source. Table I is a listing of the code required to program the 74S387 PROM for the basic digital signal source requirements.

CONCLUSION

What has been presented in this application note is a basic tutorial in analog gain adjustments for CODEC systems. A basic understanding of the terms and units of measure in the telephone industry plus the concept of transmission level point (TLP) should help the reader understand the techniques used to specify the various analog parameters of the NS TP3000 CODEC system. Finally, the concept of the digital milliwatt was introduced to provide a standard calibration technique for CODEC systems.

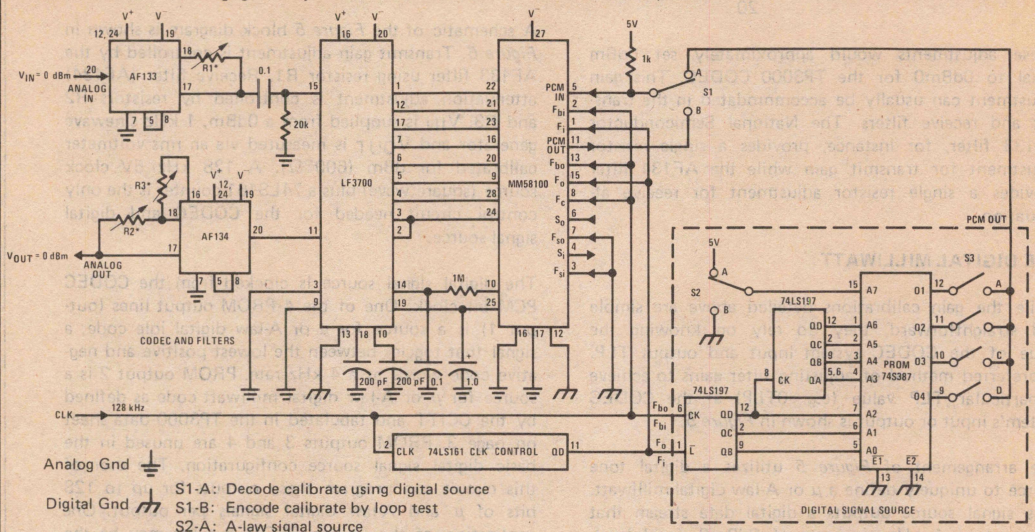

S1-A: Decode calibrate using digital source
S1-B: Encode calibrate by loop test
S2-A: A-law signal source
S2-B: μ-law signal source
S3-A: Idle code
S3-B: Digital mW
S3-C: Not used
S3-D: Not used

*Transmit gain adjust: R1 ≅ 249 kΩ
Receive gain adjust: R2/R3
where R2 ≅ 2.49 kΩ
R3 ≅ 10.0 kΩ

Note: Resistors in Ω and capacitors in μF unless noted otherwise.

FIGURE 6. Circuit Schematic for Single Channel CODEC Transmission Calibration

TABLE I. DIGITAL SIGNAL SOURCE CODING TABLE (74S387)

A7–A4 \ A3–A0	0	1	2	3	4	5	6	7	8	9	A	B	C	D	E	F	
0	0	1	1	3	3	3	3	1	1	1	1	1	3	1	3	3	μ-LAW SIGNALS
1	0	1	1	1	3	1	3	3	1	1	1	3	3	3	3	1	
2	2	1	1	3	3	3	3	1	3	1	1	1	3	1	3	3	
3	2	1	1	1	3	1	3	3	3	1	1	3	3	3	3	1	
4	0	1	1	3	3	3	3	1	1	1	1	1	3	1	3	3	
5	0	1	1	1	3	1	3	3	1	1	1	3	3	3	3	1	
6	2	1	1	3	3	3	3	1	3	1	1	1	3	1	3	3	
7	2	1	1	1	3	1	3	3	3	1	1	3	3	3	3	1	
8	0	1	2	3	0	3	0	1	1	1	2	1	0	1	0	3	A-LAW SIGNALS
9	0	1	2	1	0	1	0	3	1	1	2	3	0	3	0	1	
A	2	1	2	3	0	3	0	1	3	1	2	1	0	1	0	3	
B	2	1	2	1	0	1	0	3	3	1	2	3	0	3	0	1	
C	0	1	2	3	0	3	0	1	1	1	2	1	0	1	0	3	
D	0	1	2	1	0	1	0	3	1	1	2	3	0	3	0	1	
E	2	1	2	3	0	3	0	1	3	1	2	1	0	1	0	3	
F	2	1	2	1	0	1	0	3	3	1	2	3	0	3	0	1	

Note: Code inputs and addressing shown as hex numbers. 74S387 outputs O1 and O2 programmed as shown above, but O3 and O4 outputs are unused. User may program unique signals (e.g. steady state idle code, other output levels or frequencies) into the O3 and O4 outputs.

Applications of Hybrid Active Filters to Telecommunication Systems

National Semiconductor
Application Note AN-221
George H. Warren
March 1979

ABSTRACT

Active filters are finding greater use in telecommunication systems because of their small size and compatibility with integrated circuits. Thick film hybrid active filters have many advantages in these applications. They are smaller than discrete circuit designs and they can be pretuned by the supplier. Other advantages include better stability due to component tracking and matching. The filters used in PCM systems and DTMF (Touch Tone®) signaling systems are well defined and are used in large quantities. This makes them attractive as thick film hybrid active filters. Transmit and receive filters in 8 kHz sample rate PCM systems such as D3 channel bank and band splitting filters for DTMF receivers are described, and their application to these systems is discussed.

INTRODUCTION

Active filters are being used in telecommunications systems because of their smaller size and compatibility with integrated circuits. The thick film hybrid active filter and other thick film circuits have many advantages in these applications. Hybrid circuits are smaller than discrete circuits and they can provide a complete accurately tuned function in a single package. Another advantage is better stability due to tracking and matching of components.

In PCM systems filters are required to limit the bandwidth of the voice or data analog signal to prevent aliasing and to reject noise and line frequency interference at the input to the transmitter. The receiver output signal must be filtered to smooth the sampler signal and to correct the amplitude for the distortion introduced by the sample and hold circuit. These filters have very stringent specifications because the system must be able to operate without introducing distortion or noise that would degrade the telephone system. In some systems a signal may be converted from analog to digital and back to analog many times. If similar equipment is used each time, signal distortion could build up and degrade a signal to a point where it would be unintelligible. Using thick film hybrid technology and active laser trimming, filters can be built which meet all these requirements.

In recent years digital integrated circuits have become available to receive DTMF signals. These receivers require that the input signal be conditioned before the receiver can decode them. The input signal must be filtered to remove the dial tone signal, if present, and then split into two bands – a high band passing signal between 1209 and 1477 or 1633 Hz and a low band passing signal between 697 and 941 Hz. A valid input signal contains one and only one signal in the high and low bands which are present simultaneously. For the receiver to properly decode the signal extraneous signals must be filtered out and the two valid tones must be separated and coupled to the receiver separately. In addition, the two tones usually are gain adjusted to eliminate twist (difference in tone amplitude). They are also limited to provide a logic level signal to the input of the receiver detector.

® Registered trademark of AT&T

PCM FILTERS

PCM systems are used to digitize analog signals for low noise transmission and reception. In telephone applications 24 to 32 PCM signals are multiplexed together to form a signaling channel and are then transmitted as a single signal. *Figure 1* is the block diagram of the analog-to-digital and digital-to-analog circuit used in telephone PCM systems. The filter in the transmit channel is required to prevent aliasing. Aliasing is the error caused by frequencies greater than one-half the sampling frequency being sampled in the CODEC. These frequencies appear at the output of the receiver as erroneous signals. A signal at 4.1 kHz sampled at 8 kHz will appear at the output as a 3.9 kHz signal added to any signal which originally appeared at the input at 3.9 kHz. Obviously this will reduce the quality of the transmission system.

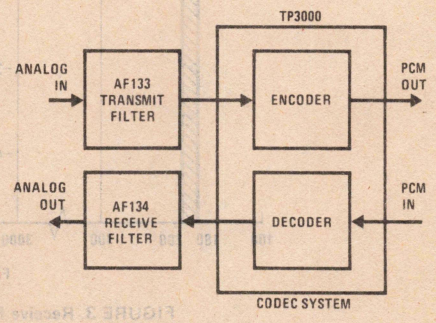

FIGURE 1. A/D-D/A Circuit Block Diagram

The requirements for a filter which will give maximum bandwidth for information with minimum signal distortion has been defined in the Western Electric specifications for the D3-channel bank. *Figure 2* is a graphical amplitude specification which meets the Western Electric and CCITT requirements for PCM systems. Filters that meet these specifications meet all amplitude requirements for high quality central office PCM transmission systems. The tight amplitude specifications are required because a signal may be converted from analog to digital to analog many times before a signal completes a telephone connection. If this were not the case the filter requirements could be relaxed.

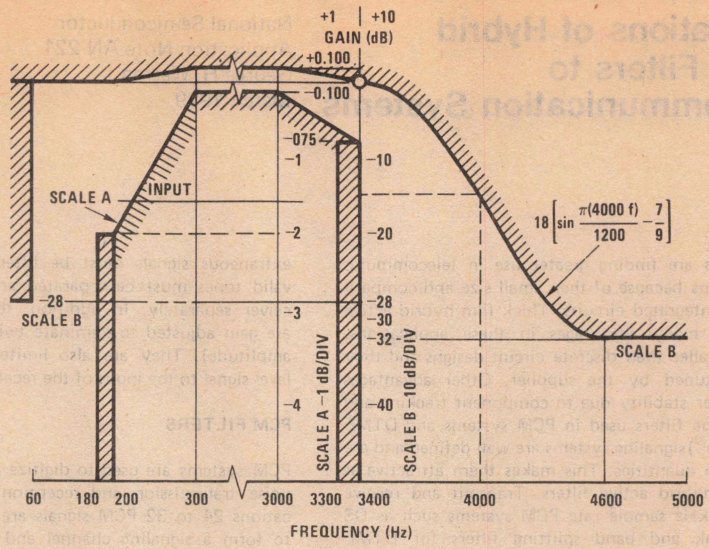

FIGURE 2. Transmit Filter Gain Relative to Gain at 1000 Hz

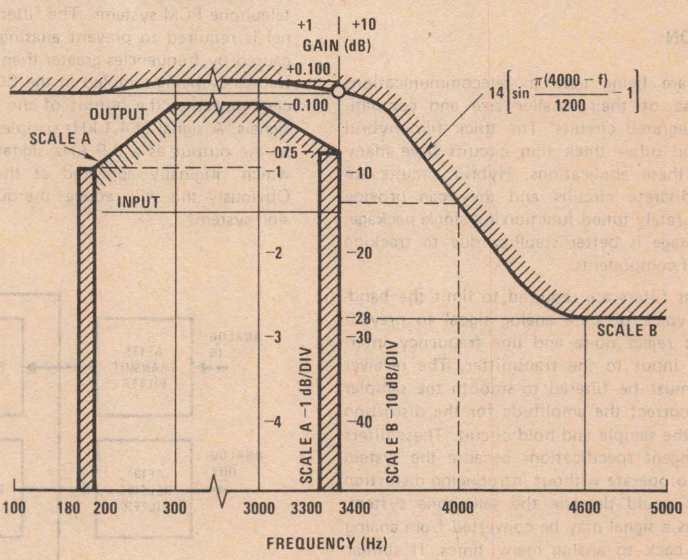

FIGURE 3. Receive Filter Gain Relative to Gain at 1000 Hz

The receive filter at the output of the decoder has two functions. One function is to attenuate all frequencies above the usable voice band and the other function is to correct the amplitude response for the distortion introduced by the output sample and hold circuit. The amplitude of the receive signal is modified by the function:

$$A = \frac{\sin(\pi \cdot f/8000)}{(\pi \cdot f/8000)}$$

The receiver response is usually specified with a sin(x)/x input signal (where $x = \pi \cdot f/8000$). *Figure 3* is a graphical amplitude specification for a PCM receive filter with sin(x)/x input that meets the Western Electric and CCITT requirements for PCM systems.

Another consideration which must be taken into account in a PCM system is the group delay distortion in the channel. The two most common ways of specifying the limits are differential delay between two frequencies and deviation from linear phase. These specifications are usually given as a system requirement which includes all circuits in the system from input to output. In a PCM channel almost all delay distortion is caused by the filters, so in practice the maximum distortion allowable per filter is slightly less than half of the total system specification. The typical specifications for either the transmit or receive filter are:

Differential Delay 1000 Hz to 2600 Hz $< 90\ \mu s$

Differential Delay 600 Hz to 2800 Hz $< 150\ \mu s$

Figure 4 is the channel specification in terms of deviation from linear phase as defined by Western Electric for the D3 channel bank.

The National Semiconductor AF133 and AF134 are a pair of filters specifically designed for PCM applications. They are 5th order elliptic low pass filters which approximate the requirements of *Figures 2, 3* and *4* for use in high quality telephone PCM systems.

The AF133 transmit filter is a low pass filter that has maximum ripple of ±0.125 dB in the band from 300 to 3000 Hz and a minimum of 32 dB attenuation above 4600 Hz. This filter typically meets all specifications of *Figure 2* above 300 Hz, but does not provide the attenuation at 60 Hz. The 60 Hz attenuation is required in two-wire systems such as those coupled to subscriber lines but not in four-wire systems used between central offices. Where 60 Hz rejection is required an additional high pass filter must be provided. A 3rd order high pass elliptic filter tuned at 240 Hz with 0.01 dB ripple and a shape factor of 3.87 will meet the requirement for 28 dB attenuation below 60 Hz.

The AF133 requires one external resistor to set the gain of the filter which can also be used to set the transmit channel gain. By varying the gain resistor from approximately 450 kΩ to 40 kΩ the gain will vary from +10 dB to −10 dB.

The AF134 receive filter is a modified low pass filter which has an amplitude response such that when a signal with sin(x)/x amplitude characteristic is inputted the output will approximate the response of *Figure 3*. The maximum ripple from 300 to 3000 Hz is ±0.125 dB and the minimum attenuation above 4600 Hz is 28 dB. The typical response meets all requirements of *Figure 3*.

The input amplitude to the filter is not usually the amplitude required to the line, but by adding an external resistor to the filter the gain can be varied over a ±20 dB range. An 11 kΩ resistor connected from output to pin 17 will decrease the gain by 20 dB and an 11 kΩ resistor from pin 16 to pin 18 will increase the gain by 20 dB.

The AF133 and AF134 filters are designed for use in systems which require tight tolerance on the quality of the signal transmission. Systems used for central office equipment and systems used to handle data as well as voice transmission require these filters. In applications where a single conversion from analog to digital to analog and only voice signals are handled, a simpler filter can be used. This type of system can be a local concentrator which combines a group of voice telephone lines for transmission over two pairs of digital lines instead of using a large number of analog lines. The AF132 Dual PCM Filter provides a transmit and receive filter in one package. Although the filters do not equal the performance of the AF133 and AF134, they provide enough filtering and amplitude correction to be used in single conversion voice-only systems. The advantages in using the AF132 are that it only requires half the power that two more complicated filters require, it requires only half the space, and it is lower in cost.

DUAL TONE MULTI-FREQUENCY FILTERS

The DTMF receivers used to detect signals from push-button telephones require at least two filters. In recent years single chip integrated circuits have been designed to detect the signaling tones and perform the logic functions required in DTMF receivers. These receivers still require input band splitting filters to separate the two input tones. Two such detectors are the Rockwell CRC8030 and the Mostek MK5102. The National Semiconductor AF121 and AF122 are bandpass filters which provide 40 dB separation between the bands. The AF121 and AF122 filters are 6th order elliptic bandpass filters. Each filter has 0 dB ± 0.5 dB gain at the center of the passband with a maximum ripple of ±2 dB peak-to-peak. The stop band rejection is greater than 40 dB. *Figure 5* shows the typical amplitude response of the two filters.

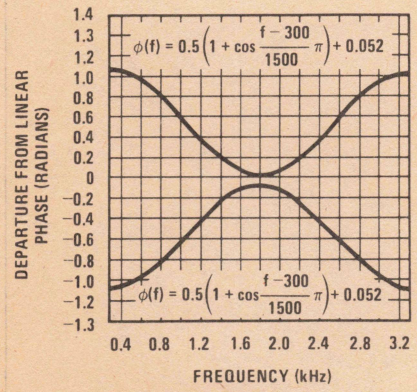

FIGURE 4. Phase Bounds

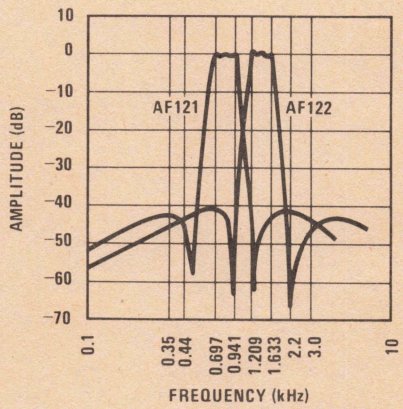

FIGURE 5. Typical Amplitude Response

Figure 6 is the block diagram of a tone receiver using the AF121 and AF122 to split the input signal into a low group and a high group signal. The signals are next passed through AGC (automatic gain control) circuits which provide amplitude correction to equalize the signal level in the two channels and to provide a known level to the limiters. The limiters have a threshold setting circuit so signals which exceed the threshold will appear at the inputs of the digital tone detector.

The input bandpass filters reject the dial tone signals, when present, and provide enough rejection to noise and extraneous signals to assure a low error rate system. The AGC amplifiers equalize the tone levels in each band, which allows the detection of signals with large twists. The AGC amplifiers also provide up to 24 dB gain to the tone signal, allowing operation over a wide range of input levels.

The National Semiconductor AF104 AGC amplifier is a linear fixed gain device with an input attenuator which is controlled by the average output amplitude. Additional circuitry provides fast recovery when a burst of signal is applied to the input. The typical recovery time of the circuit is one half cycle of the input frequency.

The limiters can be built of discrete components using a comparator such as the National Semiconductor LM339. The limiter threshold can be set by using the internal reference of the AF104, which is a +5 volt regulator. This provides a stable threshold which is independent of the system power supply. Since none of the analog circuits are dependent on the power supply for a reference and all the circuits have good common-mode rejection, a simple power supply is all that is required so long as the supply voltages remain greater than 9 volts.

CONCLUSION

Thick film hybrid circuits are being used in telecommunications systems to provide filtering and other system functions because of their small size. In PCM systems the precision required for the transmit and receive filters can be provided by actively trimmed hybrid circuits. Hybrid circuits such as active filters and AGC amplifiers can provide the signal processing required for digital tone detectives. By using active filters with good rejection to out-of-band signals, low error rate systems can be built using digital tone detectors.

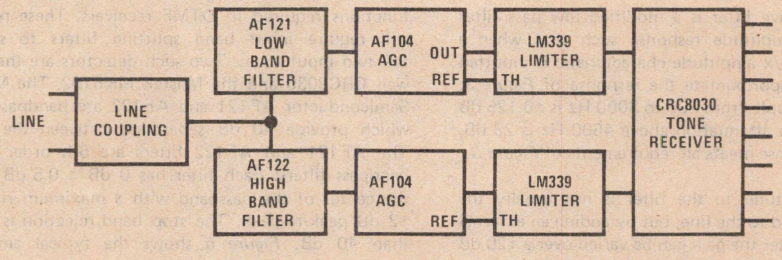

FIGURE 6. Tone Receiver Block Diagram

MOS Clock Drivers

National Semiconductor
MOS Brief 9
John Vernnard
1971

How many MOS devices can a clock driver operate? There is no hard and fast answer. Fanout is bounded by the driver's current and power ratings, but can vary greatly with drive requirements and with the way the driver itself is driven by the clock signal source.

Any of the drivers in the table might clock an MOS shift-register string with thousands of stages, for instance, but if that were the only consideration we wouldn't be producing a variety of types. All the drivers have the same basic function—translating a bipolar clock signal to MOS voltage levels and boosting the output current. They have similar output stages, whose operation was detailed in AN-18, "MOS Clock Driver."

What makes them tick differently is their input stages. The MH0007 includes an input AND gate and can be coupled directly to a TTL or DTL gate. The MH0009 is directly or capacitively coupled to a TTL line driver that provides at least 20 mA. To work at its full speed, the MH0012 requires direct-coupled, opposite phase inputs from a TTL driver. And the MH0013 is capacitively coupled to a TTL driver.

The MH0013 offers high fanout at lowest cost. It is most efficient because it does not have a built-in level shifter and the output duty cycle is lower than the input duty cycle. Essentially, it is the MH0009 without the Q1-Q2 input stages seen in Figure 1. However, the MH0013's output pulse width depends on the input drive circuitry rather than the input pulse timing. This is also true of the MH0009 when it is capacitive coupled.

When it is direct-coupled as shown in Figure 2 (most people use it capacitive coupled), the MH0009 will follow the input. That is, the driver output will remain at the MOS "1" level (near V2) for as long as the input is at the TTL "1" level. The output will be MOS "0" (near V3) while the input is at TTL "0". The MH0007 and MH0012 do the same.

In contrast, the MH0013 (or an MH0009 capacitively coupled) as shown in Figure 3 will produce an output MOS "1" level pulse during the period following the bipolar logic transition from the TTL "0" state to the "1" state. At all other times, the output will remain at the MOS "0" level. The width of the "1" output pulse depends on the cur-

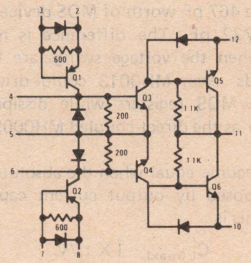

FIGURE 1. MH0009 Dual MOS Clock Driver

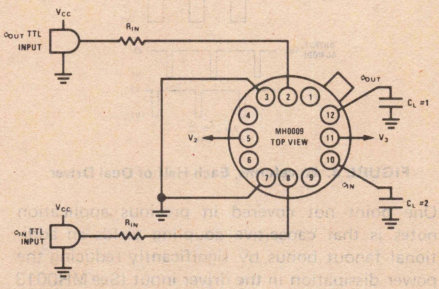

FIGURE 2. Directly Coupled Dual Driver

Characteristics of National MOS Clock Drivers

TYPE	PACKAGE	OUTPUT PHASES	INPUT COUPLING	INPUT LEVEL TRANSLATOR	MAX REP RATE—MHz	MAX OUTPUT SWING—V	I_{OUT}—mA	P_{MAX}—mW @25°C/@70°C	P_{OFF} mW
MH0007	TO-5	1	dc	Yes	5	30	±500	800/600	5
MH0009	TO-8	2	dc or Cap	Yes	3	30	±500	1500/1000	0
MH0012	TO-8	1	dc	Yes	10	30	±1000	1500/1000	20
MH0013	TO-8	2	Cap	No	5	30	±500	1500/1000	0

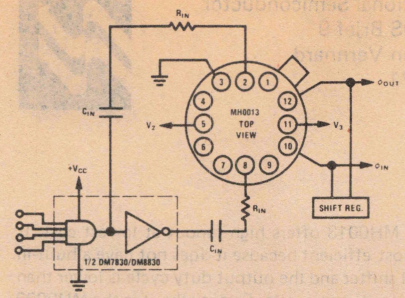

FIGURE 3. Capacitively Coupled Dual Driver

rent available from the TTL driver and the input capacitor (see Figure 4):

$$P.W. \alpha C_{IN} \times V_{drive}/I_{drive}$$

As soon as the input rises about 0.5V, the output is driven to the MOS "1" level (V2). The output returns to the MOS "0" level (V3) when the input capacitor charges.

Capacitive coupling from the TTL driver to the MH0013 helps cut system power consumption and cost to the bone when used with other low duty cycle techniques. Low duty cycle driver efficiency is discussed in AN-18 and low frequency memory operation to reduce system power is discussed in AN-19, "Low Power MOS."

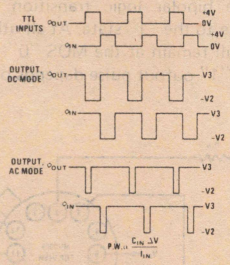

FIGURE 4. Waveforms, Each Half of Dual Driver

One point not covered in previous application notes is that capacitive coupling yields an additional fanout bonus by significantly reducing the power dissipation in the driver input (See MH0013 data sheet for more detailed calculations). Let's compare fanouts of half an MH0009 operating dc and half an MH0013 under the following typical conditions:

f = 2 MHz	$V_2 = -16V$
$t_r = 50$ ns	$V_3 = 0V$
P.W. = 200 ns	$T_A = 70°C$
$V_{CC} = +5V$	

where t_r is the rise time and P.W. the pulse width of the input signal.

One factor limiting fanout is P_{max}, the package power dissipation. This is 500 mW for each half at 70°C, which covers both the internal dissipation P_{dc} and the transient dissipation P_{ac} involved in driving the load. That is,

$$P_{max} = P_{dc} + P_{ac}$$

The only significant P_{dc} in National's two-phase drivers occurs during the "1" output, so P_{dc} in half a direct-coupled MH0009 is

$$P_{"1"} = \left[(V_{CC}-V_2)I_{IN} + \frac{(V_3 - V_2)^2}{R_b}\right] \times \text{"1" duty cycle}$$

where I_{IN} from the TTL driver averages 20 mA and R_b is the output collector load resistor of 1.1 kΩ. Therefore,

$$P_{"1"} = (21 \times 20 + 16^2/1.1) \times 0.4 \times 10^{-3}$$
$$= 261 \text{ mW}$$

This allows P_{ac} to be 239 mW in the MH0009.

In the MH0013, the input voltage component is only the TTL "1" level of about 4.0V, so its $P_{"1"}$ is only 125 mW and P_{ac} can be 375 mW. In all drivers,

$$P_{ac} = C_L f \times (V_3 - V_2)^2$$

where C_L is the capacitive load presented by the MOS devices' clock inputs. Therefore, in this example each half of the directly coupled MH0009 would drive 467 pF worth of MOS devices, and the MH0013, 732 pF. The difference is more pronounced when the voltage swings are larger. In other words, each MH0013 could drive several more large MOS registers while dissipating the same power as the direct-coupled MH0009.

The two become equal when the absolute limit on fanout imposed by output current capability is reached. This is

$$C_{L(max)} = I \times t_r/V$$

where I is the output current limit and V the output voltage swing. These drivers will withstand transient currents of 600 mA, so $C_{L(max)}$ would be 1,875 pF at $V_2 = -16V$, $V_3 = 0V$ and $t_r = 50$ ns. Techniques such as lowering the duty cycle or making both V_3 and V_2 more positive can be used to work C_L up toward $C_{L(max)}$. But don't exceed it (a precaution that has sometimes been overlooked on the data sheets of rival devices).

Feedforward Compensation Speeds Op Amp

National Semiconductor
Linear Brief 2
Robert C. Dobkin
March 1969

A feedforward compensation method increases the slew rate of the LM101A from 0.5/μs to 10V/μs as an inverting amplifier. This extends the usefulness of the device to frequencies an order of magnitude higher than the standard compensation network. With this speed improvement, IC op amps may be used in applications that previously required discretes. The compensation is relatively simple and does not change the offset voltage or current of the amplifier.

In order to achieve unconditional closed loop stability for all feedback connections, the gain of an operational amplifier is rolled off at 6 dB per octave, with the accompanying 90 degrees of phase shift, until a gain of unity is reached. The frequency compensation networks shape the open loop response to cross unity gain before the amplifier phase shift exceeds 180 degrees. Unity gain for the LM101A is designed to occur at 1 MHz. The reason for this is the lateral PNP transistors used for level shifting have poor high frequency response and exhibit excess phase shift about 1 MHz. Therefore, the stable closed loop bandwidth is limited to approximately 1 MHz.

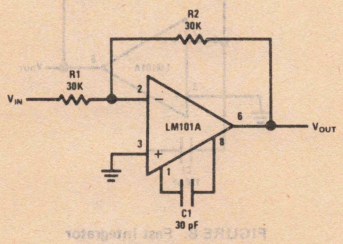

FIGURE 1. Standard Frequency Compensation

Usually, the LM101A is frequency compensated by a single 30 pF capacitor between Pins 1 and 8, as shown in Figure 1. This gives a slew rate of 0.5V/μs. The feedforward is achieved by connecting a 150 pF capacitor between the inverting input, Pin 2, and one of the compensation terminals, Pin 1, as shown in Figure 2. This eliminates the lateral PNP's from the signal path at high frequencies. Unity gain bandwidth is 10 MHz and the slew rate is 10V/μs. The diode can be added to improve slew with high speed input pulses.

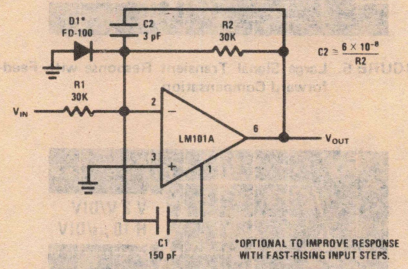

FIGURE 2. Feedforward Frequency Compensation

Figure 3 shows the open loop response in the high and low speed configuration. Higher open loop gain is realized with the fast compensation, as the gain rolls off at about 6 dB per octave until a gain of unity is reached at about 10 MHz. Figures 4 and 5 show the small signal and large signal transient response. There is a small amount of ringing; however, the amplifier is stable over a −55°C to +125°C temperature range. For comparison, large signal transient response with 30 pF frequency compensation is shown in Figure 6.

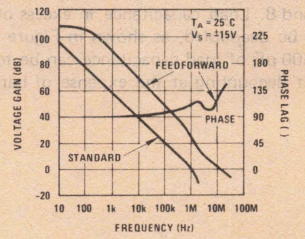

FIGURE 3. Open Loop Response for Both Frequency Compensation Networks

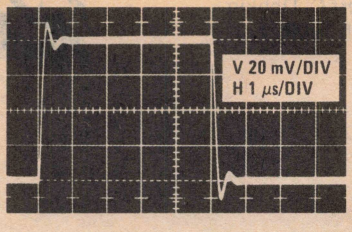

FIGURE 4. Small Signal Transient Response with Feedforward Compensation

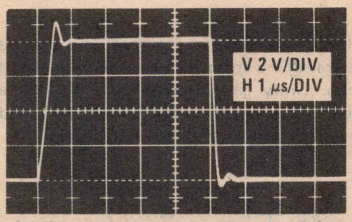

FIGURE 5. Large Signal Transient Response with Feedforward Compensation

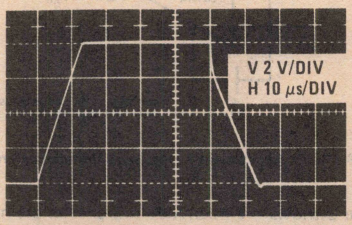

FIGURE 6. Large Signal Transient Response with Standard Compensation

As with all high frequency, high-gain amplifiers, certain precautions should be taken to insure stable operation. The power supplies should be bypassed near the amplifier with .01 μF disc capacitors. Stray capacitance, such as large lands on printed circuit boards, should be avoided at Pins 1, 2, 5, and 8. Load capacitance in excess of 75 pF should be decoupled, as shown in Figure 7; however, 500 pF of load capacitance can be tolerated without decoupling at the expense of bandwidth by the addition of 3 pF between Pins 1 and 8. A small capacitor C_2 is needed as a lead across the feedback resistor to insure that the rolloff is less than 12 dB per octave at unity gain. The capacitive reactance of C_2 should equal the feedback resistance between 2 and 3 MHz. For integrator applications, the lead capacitor is isolated from the feedback capacitor by a resistor, as shown in Figure 8.

Feedforward compensation offers a marked improvement over standard compensation. In addition to having higher bandwidth and slew, there is vanishingly small gain error from DC to 3 kHz, and less than 1% gain error up to 100 kHz as a unity gain inverter. The power bandwidth is also extended from 6 kHz to 250 kHz. Some applications for this type of amplifier are: fast summing amplifier, pulse amplifier, D/A and A/D systems, and fast integrator.

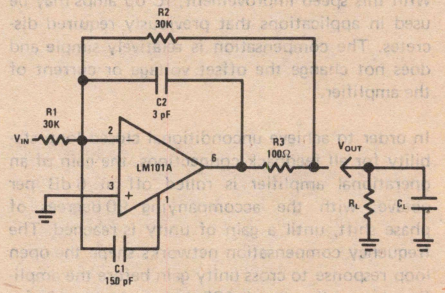

FIGURE 7. Capacitive Load Isolation

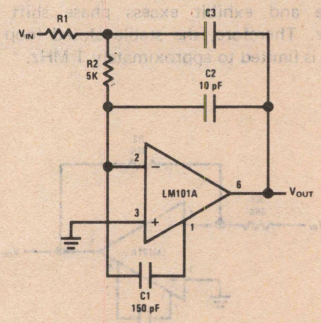

FIGURE 8. Fast Integrator

Speed Up the LM108 Feedforward Compensation

National Semiconductor
Linear Brief 14
Robert C. Dobkin
November 1970

Feedforward frequency compensation of operational amplifiers can provide a significant increase in slew rate and bandwidth over standard lag compensation. When feedforward compensation is applied to the LM101A operational amplifier,[1] an order of magnitude increase in bandwidth results. A simple feedforward network has also been developed for use with the LM108 micropower amplifier to give a factor of five improvement in speed. It uses no active components and does not degrade the excellent dc characteristics of the LM108.

Figure 1 shows a schematic of an LM108 using the new compensation. The signal from the inverting input is fed forward around the input stage by a 500 pF capacitor, C_1. At high frequencies it provides a phase lead. With this lead, overall phase

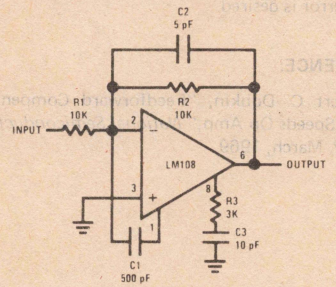

FIGURE 1. LM108 with Feedforward Compensation

shift is reduced and less compensation is needed to keep the amplifier stable. The $C_2 - R_1$ network provides lag compensation, insuring that the open loop gain is below unity before 180° phase shift occurs. The open loop gain and phase as a function of frequency is compared with standard compensation in Figure 2.

The slew rate is increased from 0.3V/μs to about 1.3V/μs and the 1 kHz gain is increased from 500 to 10,000. Small signal bandwidth is extended to 3 MHz. The bandwidth must be limited to 3 MHz because the phase shift through the lateral PNP transistors used in the second stage becomes excessive at higher frequencies. With the LM101A, 10 MHz bandwidth was possible since the signal was bypassed around the low frequency lateral PNP's. Nonetheless, 3 MHz is very respectable for a micropower amplifier drawing only 300 μA quiescent current.

When the LM108 is used with feedforward compensation, it is less tolerant of capacitive loading and stray capacitance. Precautions must be taken

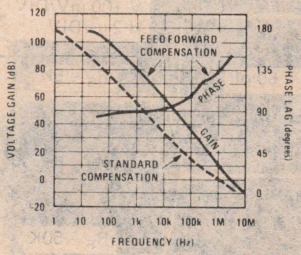

FIGURE 2. Open Loop Voltage Gain

to insure stability. If load capacitance is greater than about 75 to 100 pF, it must be isolated as shown in Figure 3. A small capacitor is always needed to provide a lead across the feedback resistor to compensate for strays at the input. About 3 to 5 pF is the minimum value capacitor. Care must be taken to minimize stray capacitance at Pins 1, 2 and 8 when feedforward compensation is used. Additionally, when the source resistance on the noninverting input is greater than 10k, it should be bypassed with a .01 μF capacitor.

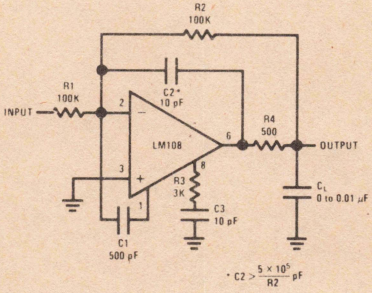

FIGURE 3. Decoupling Load Capacitance

As with any externally compensated amplifier, increasing the compensation of the LM108 increases the stability at the expense of slew and bandwidth. The circuit shown is for the fastest response. Increasing the size of C_2 to 20 or 30 pF

will provide 2 or 3 times greater stability and capacitive load tolerance. Therefore, the size of the compensation capacitor should be optimized for the bandwidth of the particular application.

The stability of the LM108 with feedforward compensation is indicated by the small signal transient responses shown in Figure 4. It is quite stable since there is little overshoot and ringing even though the amplifier is loaded with a 50 pF capacitor. Large signal transient response for a 20V square wave is shown in Figure 5. The small positive overshoot is not severe and usually causes no problems.

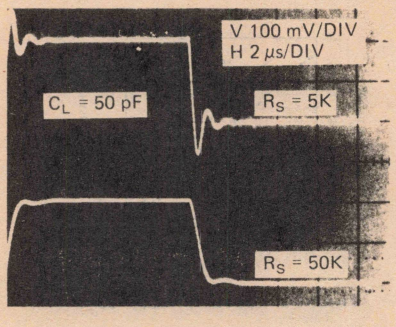

FIGURE 4. Small Signal Transient Response of LM108 with Feedforward Compensation

The LM108 is unusually insensitive to power supply bypassing with the new compensation. Even with several feet of wire between the device and power supply, it does not become unstable. However, it is still wise to bypass the supplies for drill since noise on the V^+ line can be injected to the summing junction by the 500 pF feedforward capacitor.

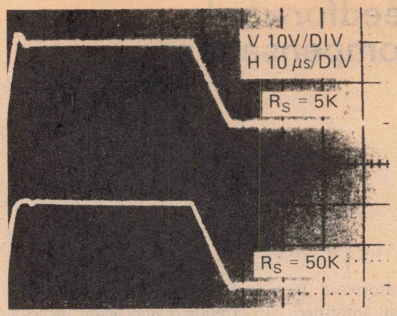

FIGURE 5. Large Signal Transient Response of LM108 with Feedforward Compensation

The new feedforward compensation is easy to use and offers a factor of five improvement over standard compensation. Slew rate is increased to 1.3V/μs and power bandwidth extended to 20 kHz. Also, gain error at high frequencies is reduced. This makes the LM108 more useful in precision applications where low dc error as well as low ac error is desired.

REFERENCE:

1. Robert C. Dobkin, "Feedforward Compensation Speeds Op Amp," *National Semiconductor LB-2*, March, 1969.

LM118 Op Amp Slews 70V/μsec

National Semiconductor
Linear Brief 17
Robert C. Dobkin
September 1971

One of the greatest limitations of today's monolithic op amps is speed. With unity gain frequency compensation, general purpose op amps have 1 MHz bandwidth and 0.3 V/μs slew rate. Optimized compensation as well as feedforward compensation can improve op amp speed for some applications. Specialized devices such as fast, unity-gain buffers are available which provide partial solutions. This paper will describe a new high speed monolithic amplifier that offers an order of magnitude increase in speed with no loss in flexibility over general purpose devices.

The LM118 is constructed by the standard six mask monolithic process and features 15 MHz bandwidth and 70 V/μs slew rate. It operates over a ±5 to ±18V supply range with little change in speed. Additionally, the device has internal unity-gain frequency compensation and needs no external components for operation. However, unlike other internally compensated amplifiers, external feedforward compensation may be added to approximately double the bandwidth and slew rate.

DESIGN CONCEPTS

In general purpose amplifiers the unity-gain bandwidth is limited by the lateral PNP transistors used for level shifting. The response above 2 MHz is so poor that they cannot be used in a feedback amplifier. If the PNP transistors are used for level shifting only at DC or low frequencies and the signal is fed forward around the PNP transistors at high frequencies, wide bandwidth can be obtained without the excessive phase shift of the PNP transistors.

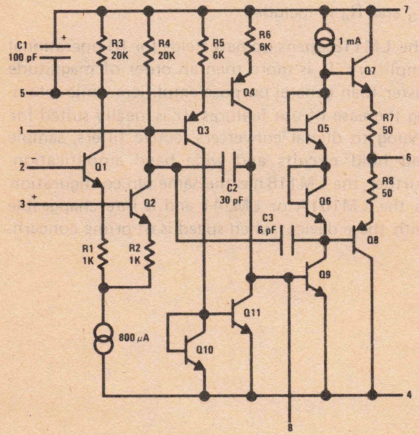

FIGURE 1. Simplified Circuit of the LM118

Figure 1 shows a simplified schematic of the LM118. Transistors Q_1 and Q_2 are a conventional differential input stage with emitter degeneration and resistive collector loads. Q_3 and Q_4 form the second stage which further amplify the signal and level shift the signal towards V^-. The collectors of Q_3 and Q_4 drive a current inverter, Q_{10} and Q_{11} to convert from differential to single ended. Q_9, which has a current source load for high gain, drives a class B output. The collectors of the input stage and the base of Q_9 are available for offset balancing and external compensation.

Frequency compensation is accomplished with three internal capacitors. C_1 rolls off on half the differential input stage so that the high frequency signal path is single-ended. Also, at high frequencies, the signal is fed forward around the lateral PNP transistors by a 30 pF capacitor, C_2. This eliminates the excessive phase shift. Overall frequency response is then set by capacitor, C_3, which rolls off the amplifier at 6 dB/octive. As previously mentioned feedforward compensation for inverting applications can be applied to the base of Q_9. Figure 2 shows the open loop frequency response of an LM118. Table 1 gives typical specifications for the new amplifier.

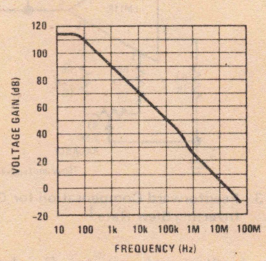

FIGURE 2. Open Loop Voltage Gain as a Function of Frequency for LM118.

TABLE 1. Typical Specifications for the LM118

Input Offset Voltage	2 mV
Input Bias Current	200 nA
Offset Current	20 nA
Voltage Gain	200K
Common Mode Range	±11.5V
Output Voltage Swing	±13V
Small Signal Bandwidth	15 MHz
Slew Rate	70 V/μs

OPERATING CONFIGURATION

Although considerable effort was taken to make the LM118 trouble free, high frequency amplifiers are more prone to oscillations than low frequency devices such as the LM101A. Care must be taken to minimize the stray capacitance at the inverting input and at the output; however the LM118 will drive a 100 pF load. Good power supply bypassing is also in order—0.1 μF disc ceramic capacitors should be used within a few inches of the amplifier. Additionally, a small capacitor is usually necessary across the feedback resistor to compensate for unavoidable stray capacitance.

Figure 3 shows feedforward compensation of the LM118 for fast inverting applications. The signal is fed from the summing junction to the output stage driver by C_1 and R_4. Resistors R_5, R_6 and R_7 have two purposes: they increase the internal operating current of the output stage to increase slew rate and they provide offset balancing. The current boost is necessary to drive internal stray capacitance at the higher slew rate. Mismatch of the external resistors can cause large voltage offsets so offset balancing is necessary. For supply voltages other than ±15V, R_5 and R_6 should be selected to draw about 500 μA from Pins 1 and 5.

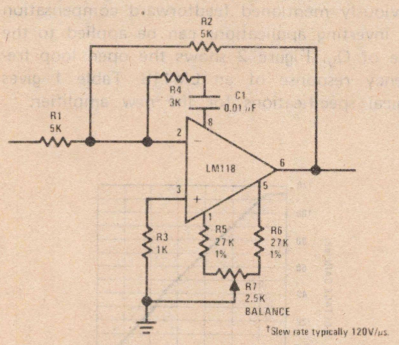

FIGURE 3. Feedforward Compensation for Greater Inverting Slew Rate†

When using feedforward, resistor R_4 should be optimized for the application. It is necessary to have about 8 kΩ in the path from the output of the amplifier through the feedback resistor and through feedforward network to Pin 8 of the device. The series resistance is needed to limit the bandwidth and prevent minor loop oscillation.

At high gains, or with high value feedback resistors R_4 can be quite low—but not less than 100Ω. When the LM118 is used a fast integrator, with a large feedback capacitor or with low values of feedback resistance, R_4 must be increased to 8 kΩ to insure stability over a full −55°C to 125°C temperature range.

One of the more important considerations for a high speed amplifier is settling time. Poor settling time can cancel the advantages of having high slew rate and bandwidth. For example—an amplifier can have severe ringing after a step input. A relatively long time is then needed before the output voltage can be read accurately. Settling time is the time necessary for the output to slew through a defined voltage change and settle to within a defined error of its final output voltage. Figure 4 shows optimized compensation for settling to

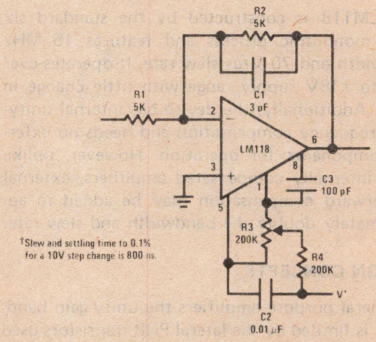

FIGURE 4. Compensation for Minimum Settling† Time

within 0.1% error. Typically the settling time is 800 ns for a simple inverter circuit as shown. Settling time is, of course, subject to operating conditions external to the IC such as closed loop gain, circuit layout, stray capacitance and source resistance. An optional offset balancing circuit, R_3 and R_4 is included.

The LM118 opens up new fields for IC operational amplifiers. It is more than an order of magnitude faster than general purpose amplifiers while retaining the ease of use features. It is ideally suited for analog to digital converters, active filters, sample and hold circuits and wide band amplification. Further, the LM118 has the same pin configuration as the LM101A or LM741 and is interchangeable with these devices when speed is of prime concern.

National Semiconductor

OCTOBER 1978

TP3000 CODEC System (TP3001 μ-Law, TP3002 A-Law)

General Description

The TP3001 and TP3002 are Pulse Code Modulation (PCM) systems for the digital coding and decoding of analog signals in the voice frequency band. The TP3001 system utilizes μ-law coding of the analog signals while the TP3002 is an A-law system. Each system consists of 2 IC packages. The TP3001 system uses linear part LF3700 and CMOS part MM58100. The TP3002 system uses the same linear part and a different CMOS part (MM58150). Each system samples a filtered (300 Hz $\leq$ f $\leq$ 3.4 kHz) analog signal at an 8 kHz rate, converts this sampled voltage to an 8-bit companded digital code (μ-law or A-law) and loads this code into a high speed serial output buffer. This output buffer will operate at any speed between 64 and 2100 kilobits per second. Either system will also accept an incoming 8-bit PCM word (again, at any speed between 64 and 2100 kilobits per second) and will automatically interrupt the encode cycle to decode the PCM word and update the CODEC output sample and hold. After decoding, the systems will automatically return to the encoding cycle. This interrupt capability allows either CODEC system to send and receive PCM data asynchronously. These systems were specifically designed for low cost "per line" or per channel CODEC applications.

These IC's contain all the necessary elements required for a complete CODEC system—both the input and output sample and hold, comparator, stable voltage reference, non-linear D/A converter, successive approximation logic, control logic and digital input and output PCM buffers. The user must provide an input aliasing filter (300 Hz $\leq$ f $\leq$ 3.4 kHz) such as the AF133 or similar filter. The AF134, or similar filter, is available for use as the output filter (300 Hz $\leq$ f $\leq$ 3.4 kHz) which is needed to reject sidebands around 8 kHz and provide correction for the sinx/x frequency distortion introduced by the output sample and hold.

A special auto-zero circuit insures an extremely low idle channel noise and low crosstalk enhancement. During the decode cycle, the non-linear D/A converter is shifted 1/2 LSB, thereby achieving a typical signal to total distortion performance of at least 3 dB better than the D3 channel bank specifications.

The TP3001 system also includes 4 pins for the insertion and extraction of the signaling bits required for D3 channel bank operation.

Features

- TP3001 uses the standard μ-255 code
- TP3002 uses the standard A-law code
- Each 2-chip system includes:
  - Non-linear D/A converter
  - Voltage reference with excellent long term stability
  - Comparator
  - Successive approximation logic
  - Input digital buffer
  - Output digital buffer
  - Input sample and hold
  - Output sample and hold
  - Auto-zero circuit
  - Control logic
- TP3001 system meets or exceeds all relevant D3 channel bank specifications
- Both systems meet or exceed all relevant CCITT specifications
- Analog input range of ±5V
- Analog output range of ±5V
- Input and output PCM words can be clocked at 64 to 2100 kilobits per second
- Incoming PCM word may be asynchronous
- Provision for the insertion and extraction of signaling bits in the TP3001 system
- Open drain PCM out for TRI-STATE® capability
- Low standby power

Applications

- Use with digital switching systems in telephone central office or private branch exchange
- Replace 24 or 32-channel shared CODEC in telephone channel bank
- Use to digitize voice and similar analog signals for low noise transmission and reception

Simplified Block Diagram

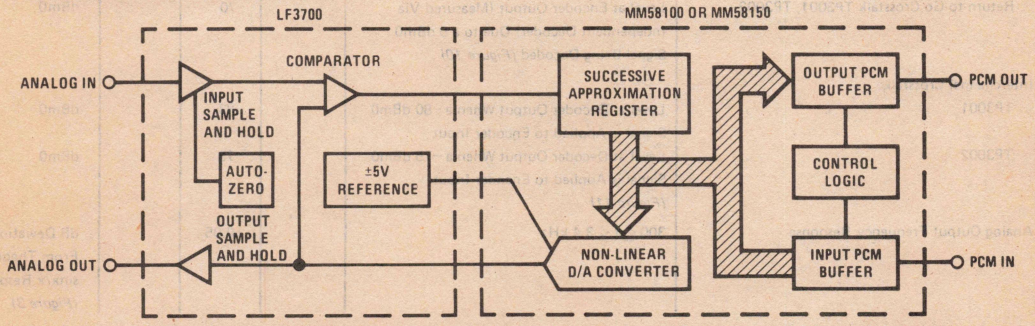

Absolute Maximum Ratings

V^+ to Gnd	15V
V^- to Gnd	−15V
Voltage at Any Pin Except Digital Inputs or Digital Outputs	V^+ to V^-
Voltage at Any Digital Input or Output	−0.3 to +5.5V
Operating Temperature Range	0°C to +70°C
Storage Temperature	−65°C to +150°C
Lead Temperature (Soldering, 10 seconds)	300°C

Electrical Characteristics

$V^+ = 12V$, $V^- = -12V$, $V_{EE} = -12V$ (Note 4) over operating temperature range, unless otherwise specified.

PARAMETER	CONDITIONS	MIN	TYP	MAX	UNITS
Signal-to-Distortion TP3001 or TP3002 Either Encoding or Decoding	Method 1: A Suitable Noise Signal Applied to the Coder Input Between −55 dBm0 and −3 dBm0 (Refer to CCITT Rec. G712, Paragraph 9, Method 1), *(Figure 4)*		2		dB Above the CCITT Limits Shown in *Figure 1*
	Method 2: Measured with C Message Weighting Filter, 1020 Hz Input Signal				
	0 dBm0 to −30 dBm0	36			dB
	−40 dBm0	30			dB
	−45 dBm0 *(Figure 5)*	25			dB
Gain Tracking Error TP3001 or TP3002 Either Encoding or Decoding	Method 1: Deviation From Gain at −10 dBm0 A Suitable Noise Signal Applied to the Coder Input Between −60 dBm0 and −10 dBm0 (Refer to CCITT Rec. G712, Paragraph 11, Method 1, *(Figure 4)*				Within Limits Shown in *Figure 2* (Note that *Figure 2* is 1/2 of the Limits Set By CCITT.)
	Method 2: Deviation From Gain at 0 dBm0 1020 Hz Input Signal				
	3 dBm0 to −37 dBm0	−0.25		+0.25	dB
	−37 dBm0 to −50 dBm0 *(Figure 6)*	−0.50		+0.50	dB
Idle Channel Noise	Input Terminated with 600Ω				
TP3001	No Signaling Present		12		dBrnc0
TP3002	With Signaling Inserted Every 6th Frame *(Figure 7)*		−72		dBm0p
Single Frequency Distortion	1020 Hz Input Signal at 0 dBm0, *(Figure 8)*			−40	dBm0
Reference Voltage	(Note 1)	5.25	5.50	5.75	V
Temperature Coefficient of Reference Voltage			±1.5		mV/°C
Decoder 0 dBm0 Output Level	(Note 1)	2.58	2.70	2.82	Vrms
Intrachannel Crosstalk					
Go-to-Return Crosstalk TP3001, TP3002	Level at Decoder Output Due to a 0 dBm0 Signal Being Encoded *(Figure 9)*		−62		dBm0
Return-to-Go Crosstalk TP3001, TP3002	Level at Encoder Output (Measured Via Independent Decoder) Due to a 0 dBm0 Signal Being Decoded *(Figure 10)*		−70		dBm0
Interchannel Crosstalk					
TP3001	Level at Decoder Output When a −80 dBm0 Signal is Applied to Encoder Input		−83		dBm0
TP3002	Level at Decoder Output When a −75 dBm0 Signal is Applied to Encoder Input *(Figure 11)*		−78		dBm0
Analog Output Frequency Response	$300 \leq f \leq 3.4$ kHz		±0.05		dB Deviation From Theoretical sinx/x Response *(Figure 3)*

Electrical Characteristics (Continued)

$V^+ = 12V$, $V^- = -12V$, $V_{EE} = -12V$ (Note 4) over operating temperature range, unless otherwise specified.

PARAMETER	CONDITIONS	MIN	TYP	MAX	UNITS
Digital Inputs (Excluding Power Down)	(Note 5)				
Logical "1" Input Voltage		4.0			V
Logical "1" Input Current	Digital $V_{IN} = 5V$			1	μA
Logical "0" Input Voltage				0.8	V
Logical "0" Input Current	Digital $V_{IN} = 0V$			−1	μA
Pin Capacitance			5		pF
PCM Out (Open Drain, Note 3)					
Logical "0" Output Voltage	$I_{OUT} = 5.4$ mA			0.4	V
Pin Capacitance			10		pF
Fall Time	1 kΩ Resistor to +5V 100 pF Capacitor to Ground		50	150	ns
S_i Out (Open Drain, Note 3)					
Logical "0" Output Voltage	$I_{OUT} = 1.0$ mA			0.4	V
Pin Capacitance			5		pF
Fall Time	10 kΩ Resistor to +5V 50 pF Capacitor to Ground		1.0	1.5	μs
PCM In Set-Up Time			100		ns
PCM In Hold Time			50		ns
S_o Set-Up Time			500		ns
S_o Hold Time			50		ns
Master Clock Frequency, F_c	For Proper Operation Duty Cycle = 50% ±10%		128		kHz
PCM Buffer Clocks, F_{bo} and F_{bi}	F_o and F_i = 8 kHz F_{bo}, F_{bi} Duty Cycle = 40–60%	64		2100	kHz
Propagation Delays					
F_{bo} to Valid PCM Out		50	150	250	ns
F_i to Valid S_i		1.0	2.3	3.5	μs
System Power Dissipations					
Power ON State	$F_{bo} = F_{bi} = 1.544$ MHz		250	300	mW
	$F_{bo} = F_{bi} = 2.048$ MHz		300		mW

Note 1: The relationship between the digital coding and the relative audio signal level is fixed as follows: a sine wave of 1 kHz and a nominal level of 0 dBm0 should be present at the audio output of the decoder when the appropriate character sequence shown below is applied to the decoder input.

TP3001 SYSTEM μ-LAW							
MSB	2	3	4	5	6	7	LSB
0	0	0	1	1	1	1	0
0	0	0	0	1	0	1	1
0	0	0	0	1	0	1	1
0	0	0	1	1	1	1	0
1	0	0	1	1	1	1	0
1	0	0	0	1	0	1	1
1	0	0	0	1	0	1	1
1	0	0	1	1	1	1	0

TP3002 SYSTEM A-LAW							
MSB	2	3	4	5	6	7	LSB
0	0	1	1	0	1	0	0
0	0	1	0	0	0	0	1
0	0	1	0	0	0	0	1
0	0	1	1	0	1	0	0
1	0	1	1	0	1	0	0
1	0	1	0	0	0	0	1
1	0	1	0	0	0	0	1
1	0	1	1	0	1	0	0

The resulting theoretical load capacity (T_{MAX}) is 3.17 dBm0 for the TP3001 system (μ-law) and 3.14 dBm0 for the TP3002 system (A-law).

Note 2: The PCM transmit filter must be AC coupled to the CODEC and a resistor of 24 kΩ or lower must be tied between analog in and analog ground. CODEC input impedance will then appear as 24 kΩ.

Note 3: PCM OUT and S_i are open drain outputs and will require external pull-up resistors to +6V maximum. 1 kΩ for PCM OUT and 10 kΩ for S_i are recommended when $F_{bo} = F_{bi} = 2.1$ MHz.

Note 4: Special care must be taken to assure that the substrate to ground pn junction is never forward biased. In cases where the negative power must be open circuited, it is recommended that a high current diode (1 amp Schottky) be placed between V^- and ground. It is further recommended that the power supply turn-on sequence be as follows: V^- or ground first, followed by V^+. Power supply turn-off should reverse the procedure.

Note 5: For TTL or LS compatibility, external pull-up resistors are required between the digital inputs and the TTL or LS logic power supply.

System Description (Refer to block diagrams)

The master clock for the system is F_c and must be run at 128 kHz which divides the 125 μs (1/8 kHz) time-frame into 16 time slots. The rising edge of the Output Sync (F_o) initiates the encoding cycle. The Input Sample and Hold Control (IN S/H CNTL) will go high for 19 μs thereby causing the input sample and hold to acquire a new input analog voltage. This acquired analog voltage is presented to a UNITY GAIN BUFFER located on the CMOS chip and then forwarded to the positive comparator input on the linear chip. The successive approximation will then begin. The SUCCESSIVE APPROXIMATION REGISTER will first load a zero code into the NON-LINEAR D/A CONVERTER. The output of the D/A converter goes to a second unity gain buffer and then to the negative input of the comparator on the linear chip. The comparator will then decide if the sampled analog voltage is positive or negative. If the analog input voltage is positive, the CONTROL LOGIC will pull the polarity control line high, which in turn will cause the voltage reference on the linear chip to deliver a positive reference voltage to the NON-LINEAR D/A CONVERTER. Conversely, if the analog input voltage is negative, a negative reference voltage will be applied to the NON-LINEAR D/A. The successive approximation will turn ON the second bit to the NON-LINEAR D/A CONVERTER and a decision is made to either leave that bit ON, or turn it OFF. The logic will then turn ON the third bit and make a decision to leave that bit ON or turn it OFF. In this way, the analog input voltage can be converted into the standard 8-bit μ-law or A-law code in 8 clock cycles.

At the end of the encode cycle the 8-bit code is loaded into the OUTPUT PCM BUFFER. The word is read out serially (MSB first) on PCM OUT by the Output Clock (F_{bo}) and the Output Sync (F_o).

The incoming PCM word is read in serially (MSB first) on the PCM IN line by the Input Clock (F_{bi}) and the Input Sync (F_i). When the input word has been read in and F_i goes low, the system will immediately switch over to the decode mode. The current status of the successive approximation is temporarily stored while the decode word is delivered to the NON-LINEAR D/A CONVERTER. During decode, the ladder is shifted the required 1/2 LSB to minimize distortion. The CONTROL LOGIC will then raise the Output S/H Control line so that the Output Sample and Hold will acquire this new output voltage. After 4 clock cycles the circuit will return to the encode mode. The analog output of the system will therefore be a staircase type output with the associated sinx/x frequency distortion, *(Figure 3)*.

The system incorporates an AUTO-ZERO circuit to ensure a low DC offset for the encoding process, and very low idle channel noise. The encoded MSB (the sign bit) is latched on the MSB OUT pin. This signal then is fed to a simple external low pass RC filter (with a time constant of about 100 ms to 1 sec) and then to the AUTO-ZERO pin on the LF3700. The DC voltage on this pin will adjust the offset of the input sample and hold to correct for any offset voltage in the encoding path. This will also correct for up to ±20 mV DC offset voltage present in the analog input signal. This scheme simply forces equal numbers of positive and negative voltages over the long term.

There are 4 pins available in the TP3001 system for the insertion and extraction of signaling bits. The operation of these pins is covered in the timing diagrams.

System Block Diagrams

TP3001 System

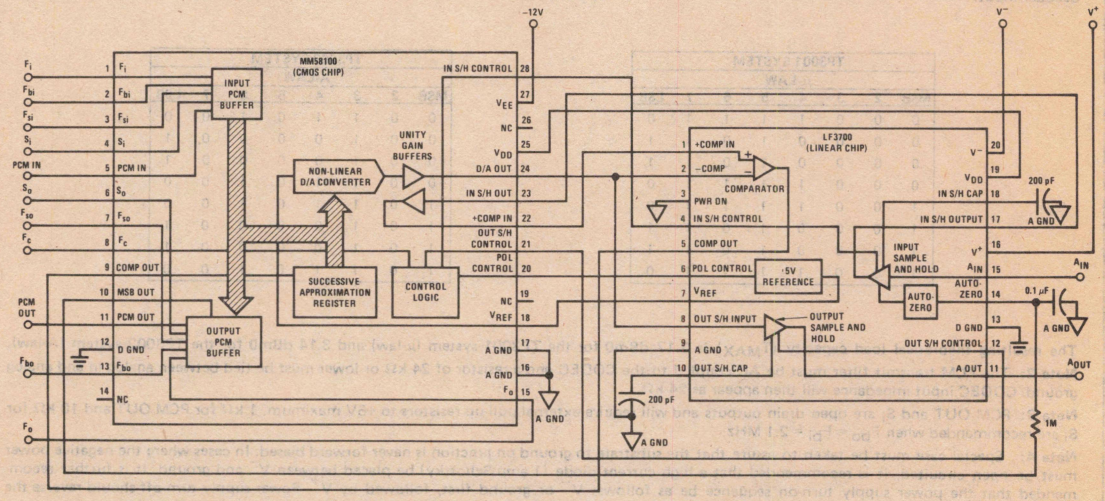

Note. Pin 3 of the LF3700 should be connected to analog ground. Pin 3 of the LF3701 is a power down control; logic high (5V) is the power down standby mode for the TP3000 systems.

System Block Diagrams (Continued)

TP3002 System

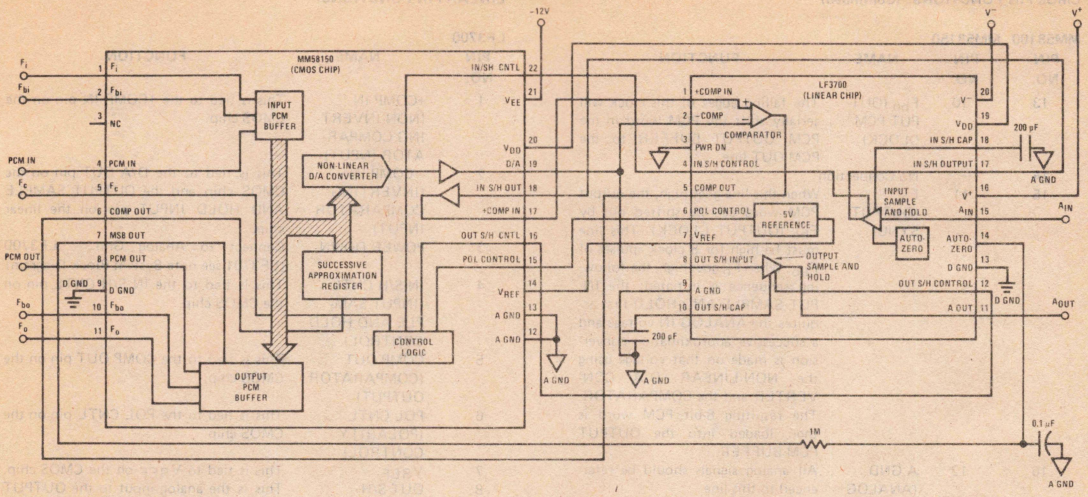

Note. Pin 3 of the LF3700 should be connected to analog ground. Pin 3 of the LF3701 is a power down control; logic high (5V) is the power down standby mode for the TP3000 systems.

Ordering Information

SYSTEM	ORDER LINEAR PART:	AND CMOS PART:
TP3001 (μ-law)	LF3700D	MM58100D
TP3002 (A-law)	LF3700D	MM58150D

Description of Pin Functions

CMOS PIN FUNCTIONS:

MM58100 PIN NO.	MM58150 PIN NO.	NAME	FUNCTION
1	1	F_i (INPUT SYNC)	When this line goes high, the data on the PCM IN line is shifted into the INPUT PCM BUFFER by F_{bi} (INPUT CLOCK). This line must be high for 8 clock pulses of F_{bi}. When F_i goes low, the incoming PCM word is loaded into the NON-LINEAR D/A CONVERTER and the OUTPUT SAMPLE AND HOLD is placed in the acquire mode. During decode, the D/A converter is shifted 1/2 LSB. After the decode is complete, the successive approximation will resume.
2	2	F_{bi} (INPUT PCM CLOCK)	The leading edges of this clock will serially shift the data on the PCM IN line into the INPUT PCM BUFFER when the F_i (INPUT SYNC) line is high.
3	–	F_{si} (MM58100 INPUT SIGNALING ENABLE)	When this line is high, the falling edge of F_i (INPUT SYNC) will transfer the LSB on the incoming PCM word to S_i (INPUT SIGNALING BIT). The PCM word is then decoded as a 7-bit code.
4	–	S_i (MM58100 INPUT SIGNALING BIT)	When F_{si} (INPUT SIGNALING ENABLE) is high, the LSB of the incoming PCM word is transferred to this line and latched by the falling edge of F_i (INPUT SYNC). An external pull-up resistor of 10k to the digital positive supply is required.

CMOS PIN FUNCTIONS: (Continued)

MM58100 PIN NO.	MM58150 PIN NO.	NAME	FUNCTION
5	4	PCM IN	The incoming PCM word is received on this line.
6	–	S_o (MM58100 OUTPUT SIGNALING BIT)	When the F_{so} (OUTPUT SIGNALING ENABLE) line is high the LSB of the PCM word in the OUTPUT BUFFER is replaced by the logic state on this line.
7	–	F_{so} (MM58100 OUTPUT SIGNALING ENABLE)	When this line is high and F_o (OUTPUT SYNC) is low, the logic level on S_o (OUTPUT SIGNALING BIT) is transferred to the LSB of the OUTPUT PCM BUFFER.
8	5	F_c (MASTER CLOCK)	This is the principal clock of the CODEC system. All CODEC functions with the exception of F_i (INPUT SYNC) and F_{bi} (INPUT CLOCK) are synchronized to F_c. This clock frequency should be 128 kHz.
9	6	COMP OUT	This is the output of the analog comparator which is used in the successive approximation conversion.
10	7	MSB OUT	The encoded MSB appears on this line for use in the AUTO ZERO function.
11	8	PCM OUT	The result of the digital encoding is available on this line. A 1k external resistor to the digital positive supply is required.
12	9	D GND (DIGITAL (GND)	All digital signals should be referenced to this line.

Description of Pin Functions (Continued)

CMOS PIN FUNCTIONS: (Continued)

MM58100 PIN NO.	MM58150 PIN NO.	NAME	FUNCTION
13	10	F_{bo} (OUTPUT PCM CLOCK)	The falling edges of this clock will serially shift the PCM word in the PCM OUTPUT BUFFER to the PCM OUT line.
14	–	No Connection	
15	11	F_o (OUTPUT SYNC)	When this line goes high, the output PCM word can be shifted out by F_{bo} (OUTPUT CLOCK). This line must be high for 8 clock pulses of F_{bo}. When F_o goes high, the following sequence is initiated: the INPUT SAMPLE AND HOLD first acquires the ANALOG IN voltage and a successive approximation conversion is made on that voltage using the NON-LINEAR D/A CONVERTER and the COMPARATOR. The resulting 8-bit PCM word is then loaded into the OUTPUT PCM BUFFER.
16	12	A GND (ANALOG GROUND)	All analog signals should be referenced to this line.
17	13	A GND (ANALOG GROUND)	All analog signals should be referenced to this line.
18	14	V_{REF}	This is the $+V_{REF}$ or the $-V_{REF}$ for the NON-LINEAR D/A CONVERTER.
19	–	No Connection	
20	15	POL CNTL (POLARITY CONTROL)	This is the digital command for $+V_{REF}$ or $-V_{REF}$.
21	16	OUT S/H CNTL (OUTPUT SAMPLE AND HOLD CONTROL)	This is the digital command for the OUTPUT SAMPLE AND HOLD to acquire a new voltage.
22	17	+COMP IN (NON-INVERTING COMPARATOR INPUT)	This is the output of the buffer amplifier for the input sample and hold. This is connected to the +COMP IN pin on the linear chip.
23	18	IN S/H OUT (OUTPUT OF THE INPUT SAMPLE AND HOLD)	This is the input of the buffer amplifier for the input sample and hold. This is connected to the output of the input sample and hold on the linear chip.
24	19	D/A OUT	This is the output voltage of the NON-LINEAR D/A CONVERTER.
25	20	V_{DD}	This is the positive voltage supply for the digital chip which is provided by the analog chip.
26	–	No Connection	
27	21	V_{EE}	This is the negative supply voltage for the digital chip (−12V).
28	22	IN S/H CNTL (INPUT SAMPLE AND HOLD CONTROL)	This is the digital command for the INPUT SAMPLE AND HOLD to acquire a new voltage.

LINEAR PIN FUNCTIONS:

LF3700 PIN NO.	NAME	FUNCTION
1	+COMP IN (NON-INVERTING COMPARATOR INPUT)	This is tied to the +COMP IN pin on the CMOS chip.
2	−COMP IN (INVERTING COMPARATOR INPUT)	This is tied to the D/A OUT pin on the CMOS chip and the OUTPUT SAMPLE AND HOLD INPUT pin on the linear chip.
3	POWER DOWN	Connect to Analog Gnd – LF3700 (LF3701 see note System Block Diagram).
4	IN S/H CNTL (INPUT SAMPLE AND HOLD CONTROL)	This is tied to the IN S/H CNTL pin on the CMOS chip.
5	COMP OUT (COMPARATOR OUTPUT)	This is tied to the COMP OUT pin on the CMOS chip.
6	POL CNTL (POLARITY CONTROL)	This is tied to the POL CNTL pin on the CMOS chip.
7	V_{REF}	This is tied to V_{REF} on the CMOS chip.
8	OUT S/H INPUT (INPUT TO OUTPUT SAMPLE AND HOLD)	This is the analog input to the OUTPUT SAMPLE AND HOLD. This should be connected to the D/A OUT pin on the CMOS chip and the inverting comparator input pin on the linear chip.
9	A GND (ANALOG GROUND)	All analog signals should be referenced to this line.
10	OUT S/H CAP (OUTPUT SAMPLE AND HOLD CAPACITOR)	A low leakage, 200 pF capacitor should be connected from this line to ANALOG GROUND.
11	A OUT (ANALOG OUT)	This is the output of the OUTPUT SAMPLE AND HOLD.
12	OUT S/H CNTL (OUTPUT SAMPLE AND HOLD CONTROL)	This is tied to the OUT S/H CNTL pin on the CMOS chip.
13	D GND (DIGITAL GROUND)	All digital signals should be referenced to this line.
14	AUTO Z (AUTO ZERO)	This is connected to the MSB OUT line of the CMOS chip after an external low pass filter.
15	A IN (ANALOG IN)	This is the appropriately filtered analog input.
16	V^+	This is the positive supply voltage for the analog chip.
17	IN S/H OUTPUT (OUTPUT OF INPUT SAMPLE AND HOLD)	This is the analog output voltage of the INPUT SAMPLE AND HOLD. This is tied to the IN S/H OUT pin on the CMOS chip.
18	IN S/H CAP (INPUT SAMPLE AND HOLD CAPACITOR)	A low leakage, 200 pF capacitor should be connected from this line to analog ground.
19	V_{DD}	This is the positive supply voltage for the CMOS chip. This is tied to V_{DD} on the CMOS chip.
20	V^-	This is the negative supply for the linear chip.

Typical Performance Characteristics

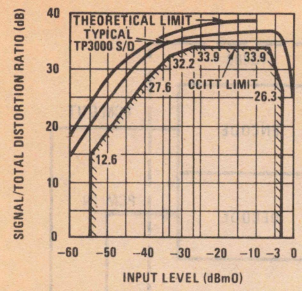

FIGURE 1. Typical Signal/ Total Distortion Ratio as a Function of Input Level with a White Noise Source

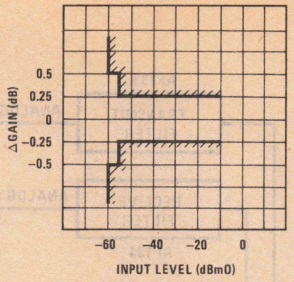

FIGURE 2. Maximum Gain Tracking Error (ΔGain) as a Function of Input Level with a White Noise Source

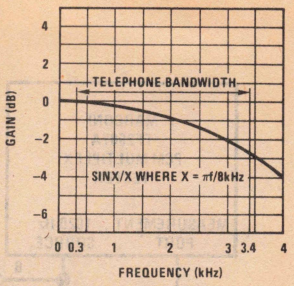

FIGURE 3. Output sinx/x Frequency Response

Test Set-Up Diagrams*

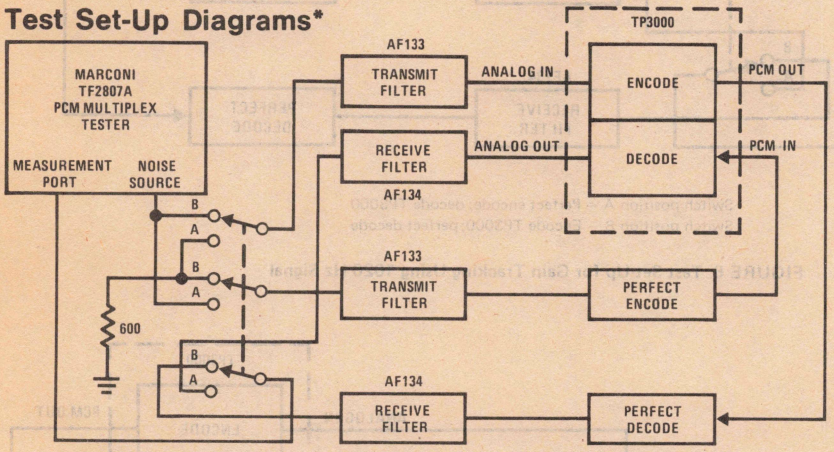

The Marconi TF2807A's noise output has a probability distribution of amplitude approximating a Gaussian distribution which is band limited to conform with the latest CCITT recommendations.

Switch position A — Perfect encode; decode TP3000
Switch position B — Encode TP3000; perfect decode

FIGURE 4. Test Set-Up for Signal-to-Distortion and Gain Tracking Using a Noise Source

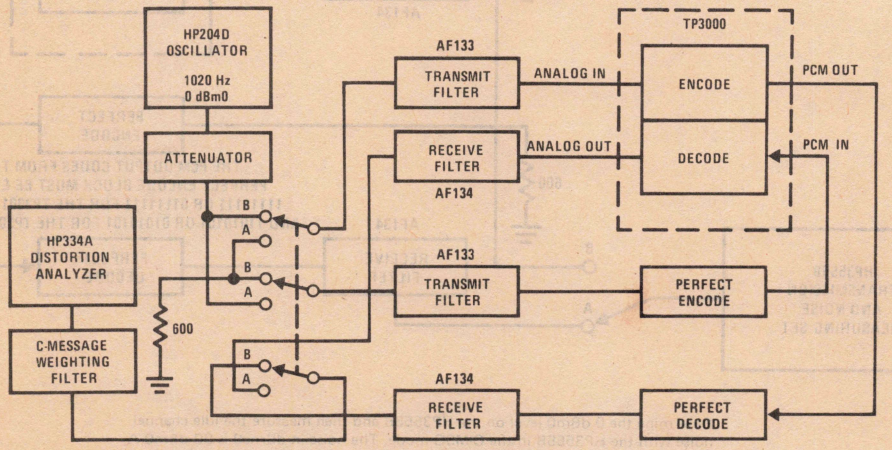

Switch position A — Perfect encode; decode TP3000
Switch position B — Encode TP3000; perfect decode

FIGURE 5. Test Set-Up for Signal-to-Distortion Using a 1020 Hz Signal

*Perfect encode or decode is μ-law when testing TP3001 and A-law when testing TP3002

Test Set-Up Diagrams* (Continued)

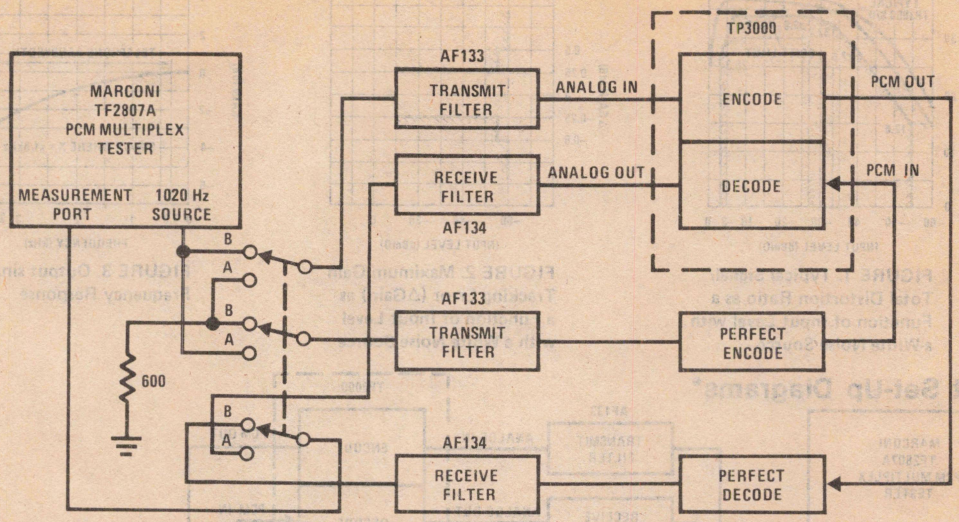

Switch position A — Perfect encode; decode TP3000
Switch position B — Encode TP3000; perfect decode

FIGURE 6. Test Set-Up for Gain Tracking Using 1020 Hz Signal

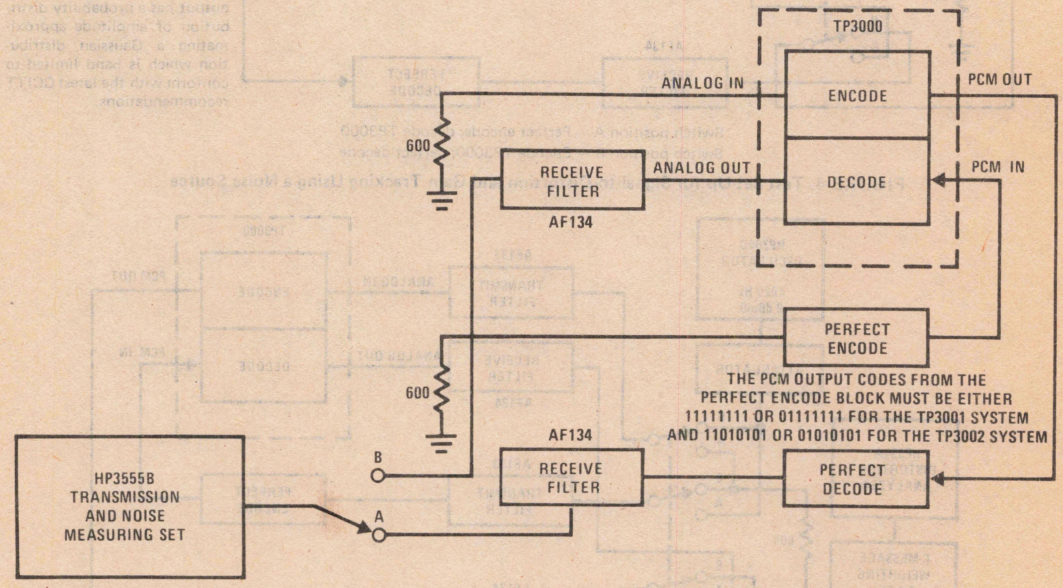

Determine the 0 dBm0 level on the HP3555B and then measure the idle channel noise with the HP3555B in the C-MSG-mode. The noise in dBrnc0 is 90 dBm0-A, where A is the idle channel noise measurement down from the 0 level (in dB).

FIGURE 7. Test Set-Up for Idle Channel Noise

*Perfect encode or decode is μ-law when testing TP3001 and A-law when testing TP3002

Test Set-Up Diagrams* (Continued)

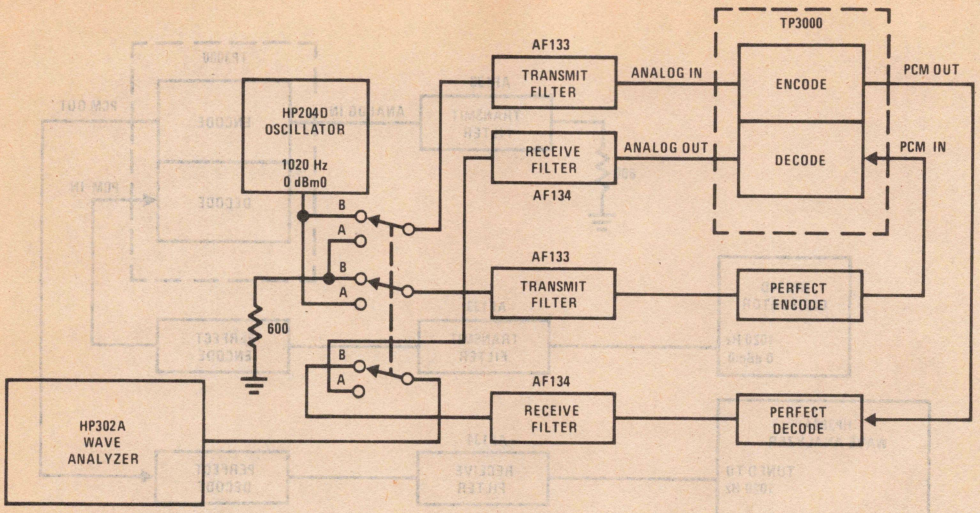

The output at any frequency (except 1020 Hz) should be at least 40 dB down. The two frequencies of interest are the second and third harmonics (2040 Hz and 3060 Hz).

Switch position A -- Perfect encode; decode TP3000
Switch position B — Encode TP3000; perfect decode

FIGURE 8. Test Set-Up for Single Frequency Distortion

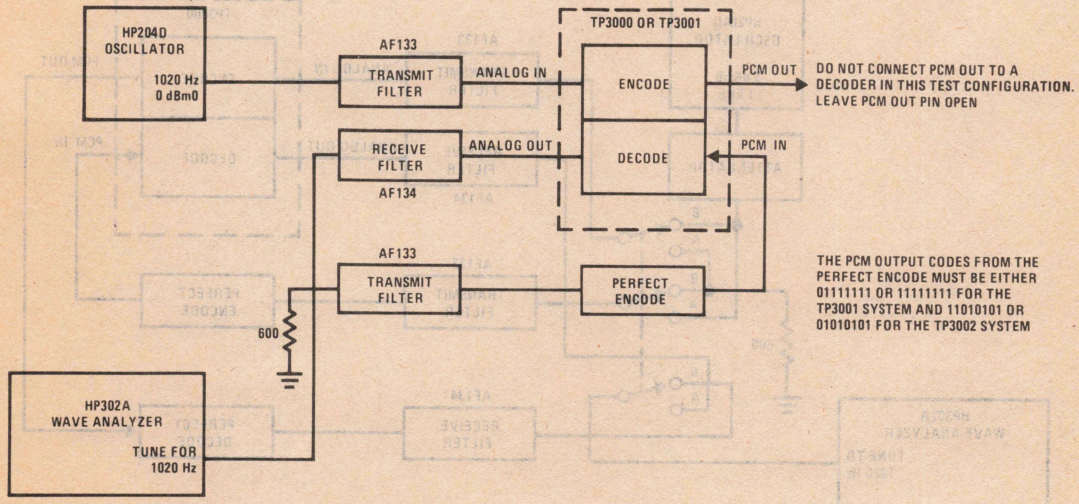

FIGURE 9. Test Set-Up for Go-to-Return Crosstalk

*Perfect encode or decode is μ-law when testing TP3001 and A-law when testing TP3002

Test Set-Up Diagrams* (Continued)

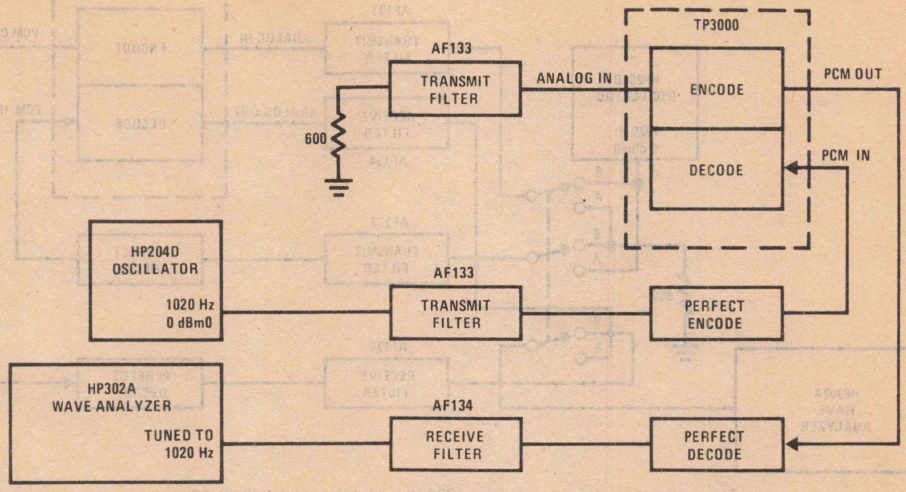

FIGURE 10. Test Set-Up for Return-to-Go Crosstalk

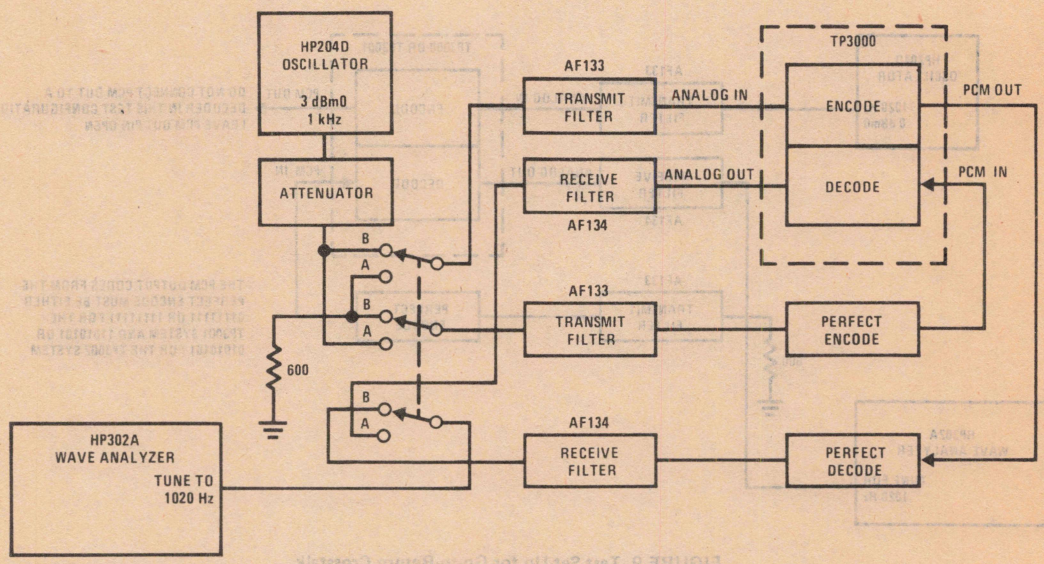

Switch position A — Perfect encode; decode TP3000
Switch position B — Encode TP3000; perfect decode

FIGURE 11. Test Set-Up for Interchannel Crosstalk

*Perfect encode or decode is μ-law when testing TP3001 and A-law when testing TP3002

Timing Diagrams

SYSTEM TIMING

F_o, F_{bo} and PCM OUT Relationships

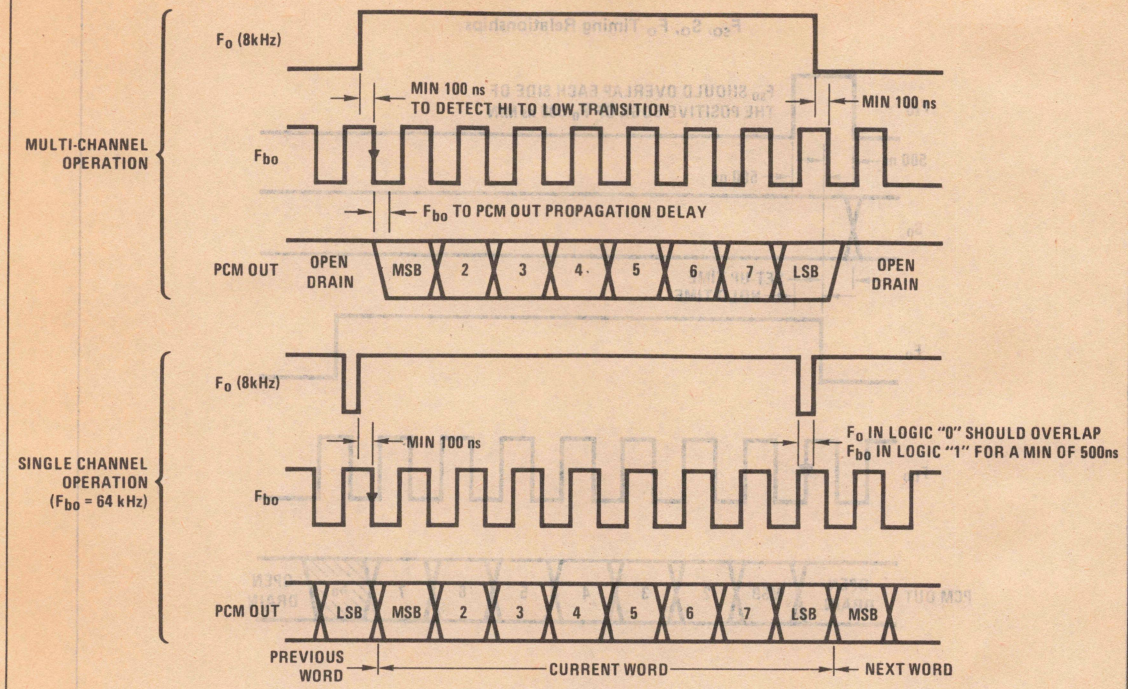

F_i, F_{bi} and PCM IN Relationships

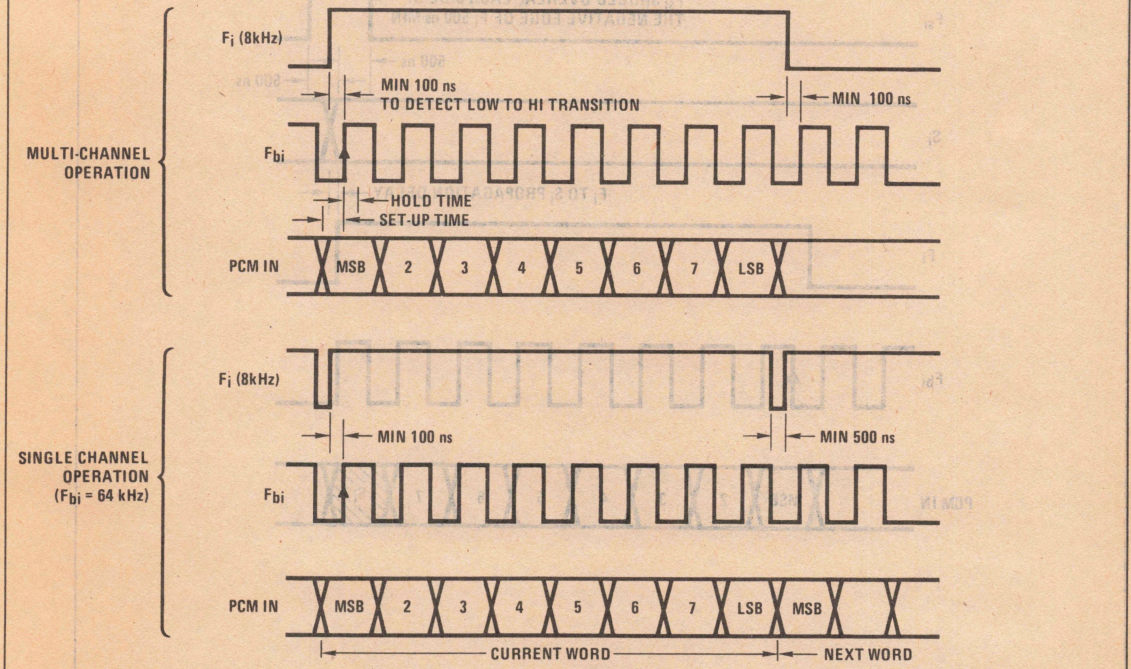

Timing Diagrams (Continued)

SIGNALING
(TP3001 Only)

F_{SO}, S_O, F_O Timing Relationships

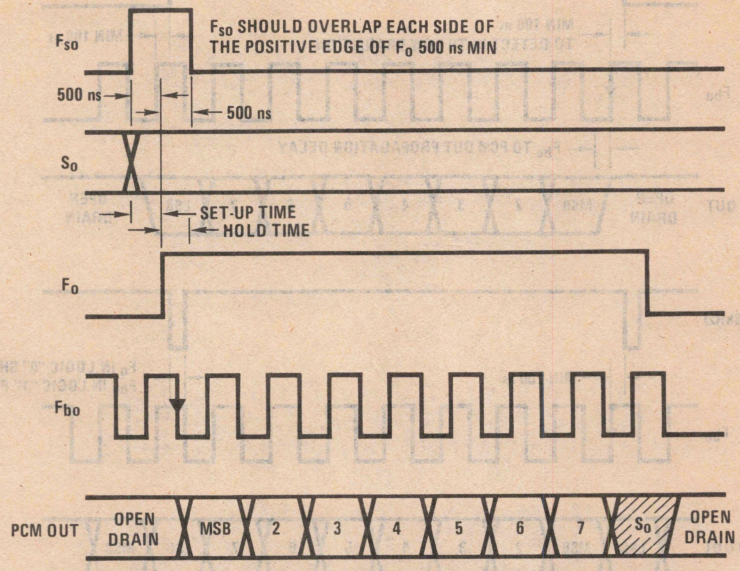

F_{Si}, S_i, F_i Timing Relationships

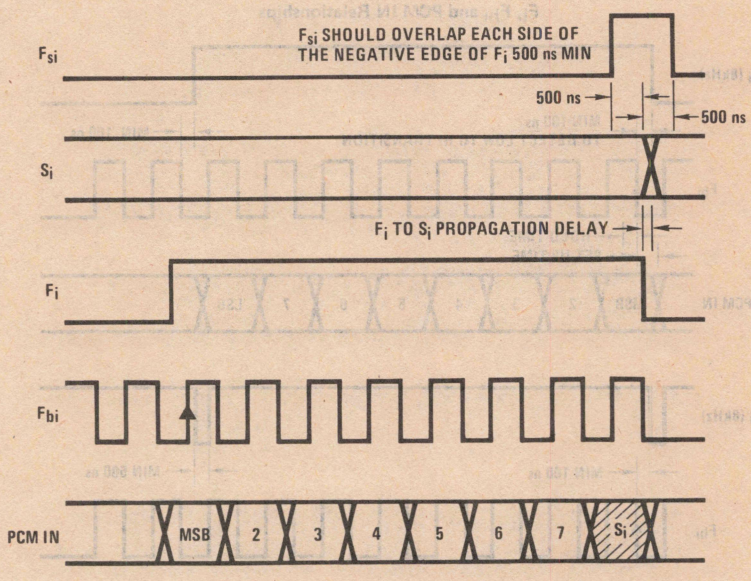

Timing Generator

2.048 MHz Timing Generator

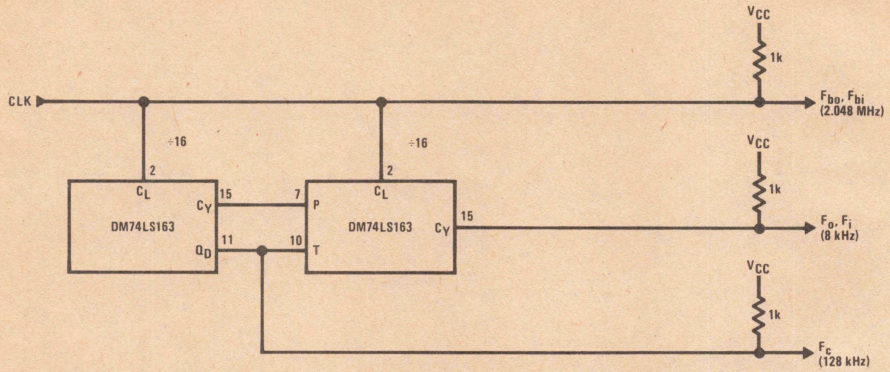

Waveforms

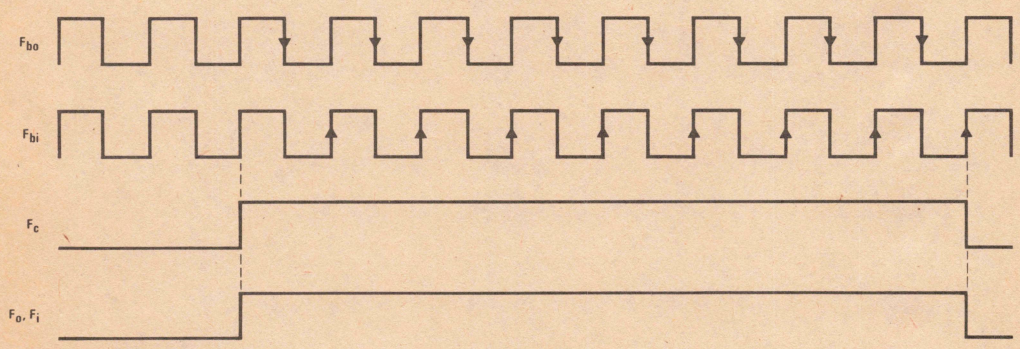

Timing Generator

2.048 MHz Timing Generator

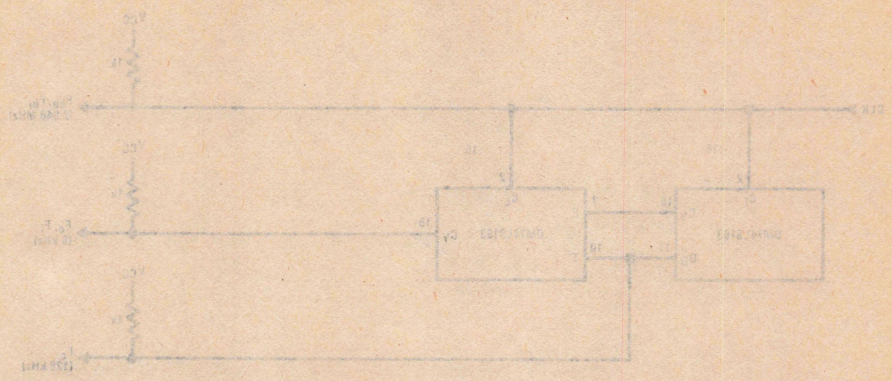

Waveforms

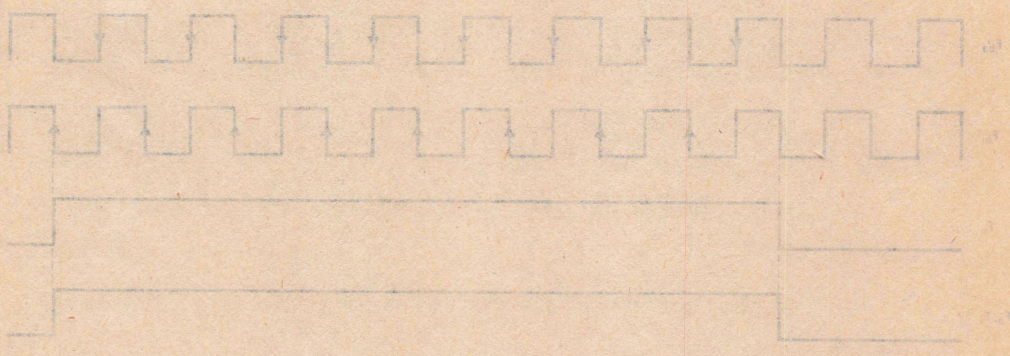

Section 17

Appendices/ Physical Dimensions

17

Appendix I. Reliability and the Hybrid Device

This article is abstracted from a more comprehensive publication of National Semiconductor's Reliability Department entitled *The Reliability Handbook*.

It is primarily intended to explain how the applicable MIL standards have been modified to accommodate the special characteristics of hybrid products in general. For specific processing flows employed by National Semiconductor, please refer to *The Reliability Handbook*.

Introduction

The majority of the reliability concerns that have been discussed up to this point have been discussed in terms pertaining to monolithic integrated circuits, that is, devices which contain a single die. However, many military systems also use hybrid devices. Although most of the requirements of Mil-Std-883 and Mil-M-38510 are applicable to hybrids as well as monolithic devices, there are several considerations that are unique to hybrids.

Discussion of these considerations must begin with a brief definition of a hybrid. The dictionary defines "hybrid" as "anything of mixed origin." The hybrid microcircuit fits that definition, since the typical hybrid utilize a number of components from more than one technology to perform a function which could not be achieved in monolithic form with the same parametric efficiency or at the same or lower cost. Hybrids may be subdivided into multichip devices, simple hybrids and complex hybrids.

1.0 Multichip Devices

A multichip device is one which contains several chips (active or passive); and may contain a substrate, but will have no thin or thick film elements on the substrate. Typically, these

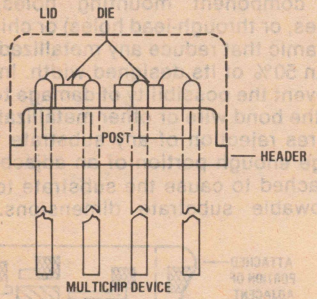

MULTICHIP DEVICE
FIGURE 1

are constructed either to provide a dual version of a conventional monolithic device (such as the LH2111 dual LM111 comparator) or to combine the functions of several chips which need no additional components to function together (such as a PNP/NPN transistor pair, which could not be fabricated on one die).

1.1 Processing of Multichip Devices

Multichip devices are normally processed identically to monolithic devices. The only required change in the flow is that precap must be performed in accordance with Method 2017 of Mil-Std-883 where both integrated circuit and discrete dice are used in the same device, or when a substrate is employed. Method 2017 will be discussed in more detail later. All other screening for multichip devices would be in full compliance with Mil-M-38510 (where specified) and Mil-Std-883, or Mil-S-19500 and Mil-Std-750 (where all of the dice utilized are discrete dice). For further discussion of Mil-S-19500 and Mil-Std-750, refer to Chapter 7.

2.0 Simple Hybrids

Simple hybrids (which are defined as those with an inner seal perimeter of less than 2.0 inches[1]) are more complex than the multichip devices. They will contain one or more dice, with the dice mounted on a substrate (normally ceramic or alumina) which also has deposited

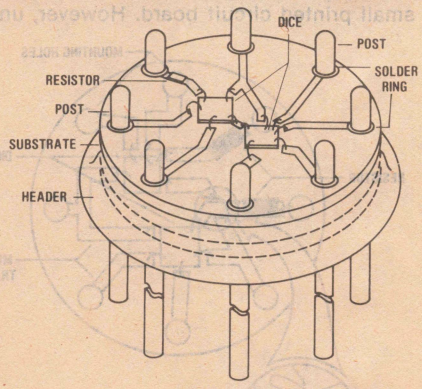

SIMPLE HYBRID
FIGURE 2

on it metallization traces and other thin or thick film components[2] (such as resistors and capacitors). The dice will be connected electrically to the substrate with bonding wires, and the substrate will then be connected to the package pins either with solder rings (header packages) or bond wires (flat pack and dual-in-line). Simple hybrids are, in many cases, "off the shelf" parts that lend themselves readily to standardized reliability screening techniques.

1. *The inner seal perimeter is the perimeter of the cavity. This definition has been established by Mil-Std-883, Method 5008.*

2. *Thin film components are those which are 5 microns (5×10^4 Å) or less in thickness; thick film components are those which are greater than 5 microns. Thin and thick film components may be printed on a substrate through a number of techniques, including screening, evaporation, and the like.*

2.1 Processing of Simple Hybrids

Most of these hybrids are screened in accordance with Class B of Method 5004 of Mil-Std-883 with the substitution of the hybrid visual criteria of Method 2017 for the criteria of Method 2010, although in some cases, the device may be screened per the complex hybrid procedures of Method 5008, which shall be discussed later. If this optional method is employed, centrifuge testing must be done at 30,000 G's in the Y1 axis. The change in precap method is done in order to evaluate problem areas that are unique to hybrids.

2.2 Die Visual Inspection

The visual inspection of the dice is performed in accordance with the relevant paragraphs of either Method 2010 of Mil-Std-883 (for IC dice) or Method 2072 of Mil-Std-750 (for discrete dice), but several of the added components utilized by the hybrid manufacturer have characteristics which make them incompatible for either method. Inspection criteria has, therefore, been provided in Method 2017 for passive chip components.[3]

2.3 Substrate Visual Inspection

There are additional unique considerations presented by the ceramic substrate. In essence, the substrate could be viewed as a small printed circuit board. However, unlike a

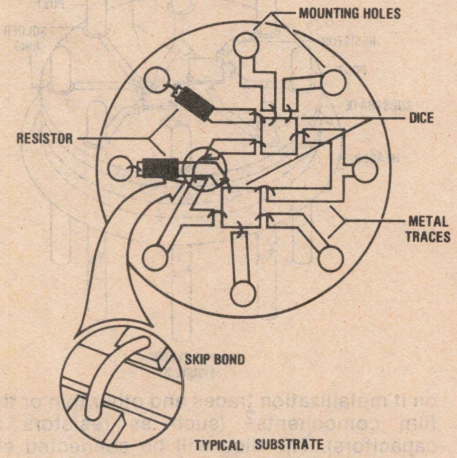

TYPICAL SUBSTRATE
FIGURE 3

printed circuit board, which has only electrical traces on it, the substrate has circuit elements also deposited on it. Once the substrate has been fabricated, the components will be deposited onto the substrate, and the dice attached in their appropriate positions. Bond wires will then be attached between the dice and the substrate, and between metal traces on the substrate. This second category of bond is referred to as a "skip bond", "jump bond", or "substrate bond". In some instances, skip bonds are utilized to patch voids in the substrate metallization, but, for 38510 QPL devices, this is limited to one patch which must be made with a minimum of two wires. Few high-volume hybrid manufacturers employ patching, and it tends to be used more widely with small-volume, large substrate devices.

2.3.1 Substrate Cracks

There are a number of substrate defects that could adversely affect reliability, and 2017 adds criteria covering each of these. For example, cracks in the substrate could lengthen as the device is exposed to thermal or mechanical stresses. An extended crack could extend through a substrate metal trace, thus opening the circuit. To prevent this, 2017 requires rejection of any substrate containing a crack .005 inch or greater in length that extends toward an operating portion of the circuit, a crack of any length that is closer than .001 inch to an operating portion of the circuit, or a crack of any length that does not begin at the edge of the substrate.

2.3.2 Substrate Chips and Holes

Chips or holes in the substrate could also lead to cracking or breaking problems over time. As a result, 2017 rejects any substrate which contains holes that are not present by design (such as component mounting holes, alignment holes, or through-lead holes) or chip outs in the ceramic that reduce any metallized area to less than 50% of its designed width. In addition, to prevent the possibility of damage to or shorting of the bond wire or other metallization, 2017 requires rejection of any substrate which has a large enough portion of an adjacent substrate attached to cause the substrate to exceed the allowable substrate dimensions. 2017 also

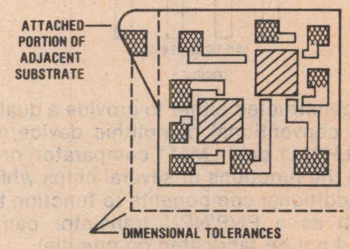

FIGURE 4

3. *An active device is a device which converts input signal energy into output signal energy through interaction with the energy from an auxilliary source or sources. When subjected to a voltage or current, it exhibits either gain (amplification) or control (such as logic or regulation) characteristics. Passive devices, then, are those which exhibit no gain or control (such as resistors, capacitors, the like).*

requires rejection of any substrate with attached components closer than .003 inches to the edge of the substrate.

2.3.3 Substrate Metallization

Metallization void and scratch criteria for the substrate are similar to the criteria for die metallization in Method 2010, since the reliability constraints are essentially the same. Additional criteria, however, have been added to cover the metallization over the dielectric area of a deposited thin film capacitor or crossover. Metallization corrosion, adherence, probe damage, bridging and alignment criteria also follow very closely the criteria of Method 2010.

2.3.4 Resistor Visual Inspection

Resistors are deposited on the surface of the substrate through either thick film or thin film processes, and then (in many cases), trimmed to required tolerances with a laser beam or with abrasives. These resistors also require inspection to screen out potential defects. Since repaired resistors are less likely to be reliable than those which are deposited correctly the first time, any evidence of resistor repair is cause for rejection. Residual resistor material in the trim area is also cause for rejection. Criteria are also established for cracks, voids, separation between resistors and other conductors, minimum line-width and minimum post-trim width. Each of these criteria addresses itself to an area where a defect in the resistor could lead to eventual circuit degradation or failure.

2.3.5 Die Attach

The criteria for die-attach is also quite similar to the die-attach criteria for monolithic devices. Where conductive material is used for die or component mounting, additional criteria have been supplied for clearance between the mounting medium and other metallization on the substrate.

2.3.6 Substrate Attachment to the Package

Another set of criteria deals with the mounting of the substrate to the package. Two methods of substrate attachment may be employed. The first, which is utilized for flat packages and those dual-in-line packages whose leads pass through the side rather than the base of the package, employs the use of a mounting material under the substrate. In order to allow the mounting material to flow out from the substrate properly, many substrates are fabricated with a narrower base area, usually referred to as the pedestal. When mounting material is used under the substrate for a header package (which is normally done only

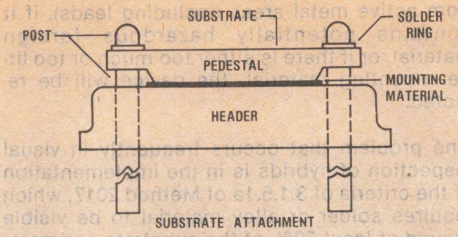

SUBSTRATE ATTACHMENT

FIGURE 5

for high power devices where substantial heat must be dissipated through the substrate to the package itself), the pedestal is important since excessive outflow of a conductive mounting material could short the pins; however, many hybrids are manufactured without pedestals.

The second method of attachment, normally used for header packages and for dual-in-line packages (normally of the larger, module variety) whose leads pass through the base of the package, employs the use of solder rings (or "doughnuts") reflowed over the pin where it passes through the mounting holes in the substrate. The solder preforms also accomplish a second important function: they provide electrical contact between the substrate and the pins, thus eliminating the need for additional

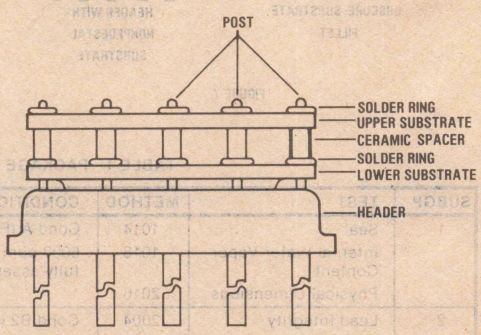

MULTIPLE SUBSTRATE HEADER

FIGURE 6

bond wires. Where multiple substrates are used, this mounting technique will always be used for the upper substrate. A non-conductive ceramic spacer will be placed over each pin to position the upper substrate. The fact that the upper substrate obstructs visual examination of the lower substrate requires that the lower substrate be completely mounted and inspected before the second substrate is attached.

The criteria for substrate attachment are directed to the same concerns discussed in the die mounting area. If the substrate attaching medium does not have adequate clearance

from active metal areas (including leads), if it contains potentially hazardous foreign material, or if there is either too much or too little mounting material, the device will be rejected.

One problem that occurs frequently in visual inspection of hybrids is in the implementation of the criteria of 3.1.5.1a of Method 2017, which requires solder or alloy material to be visible around at least 50% of the substrate perimeter or to be continuous on two sides of the substrate (whichever is less). On devices where the substrate is installed in a cavity (such as a flat package), the package sides obstruct evaluation of this criteria. On headers where a non-pedestal substrate is employed with conductive mounting material, the mounting material cannot flow out far enough to be seen without potentially shorting the pins. On pedestral substrates, the posts will interfere with evaluation of this criteria. In many cases, this criteria is waived at internal visual, and an X-ray screen (which can view alloy coverage) added to the screening flow.

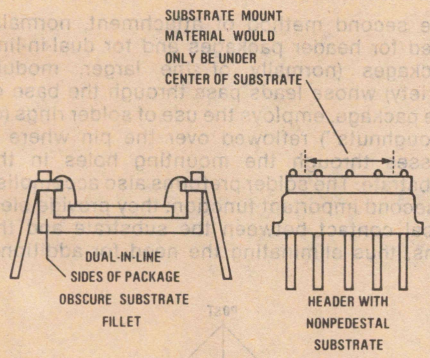

FIGURE 7

2.3.7 Bonds, Lead Wires and Foreign Material

The criteria for bonds, lead wires, and foreign material within Method 2017 are essentially identical to those of Method 2010, since the reliability considerations in these areas are the same.

3.0 Complex Hybrids

The testing of larger, more complex hybrids (which are defined as those with a cavity perimeter of greater than 2 inches) does require some additional modifications to the flows defined by Methods 5004 and 5005. This modification is accomplished in Method 5008 of Mil-Std-883.

3.1 Assembly Constraints

Two requirements are added prior to the assembly of the device. The first is for package qualification (as shown below in Table 1).

With the exception of hermeticity testing, which is required on each package lot, this testing is only required for the first lot of packages, and must be repeated only if constructional changes are made to the package.

TABLE 1 PACKAGE QUALIFICATION TESTING

SUBGP	TEST	METHOD	CONDITION	LTPD
1	Seal	1014	Cond A (Prior to lid attach-Modified method)	5 PKGS
	Internal Water Vapor Content	1018	6000 ppm max at 100°C (Must be performed on fully assembled parts)	1 PKG
	Physical Dimensions	2016		LTPD = 15
2	Lead Integrity	2004	Cond B2 (Lead Fatigue)	LTPD = 15
	Seal (fine and gross)	1014		
3	Thermal Shock	1011	Cond B min, 15 cycles min	LTPD = 15
	Temperature Cycle	1010	Cond C, 100 cycles min	
	Moisture Resistance	1004		
	Seal (fine and gross)	1014		
	Visual examination		per visual criteria of Method 1004	
4	Mechanical Shock	2002	Cond C min, Y_1 axis only	LTPD = 15
	Particle Impact Noise Detection	2020	Cond A or B	
	Constant Acceleration	2001	Cond B min, Y_1 axis only	
	Seal (Fine and gross)	1014		
	Visual examination		in accordance with Method 1010 or 1011	
5	Salt Atmosphere	1009	Cond A	LTPD = 15
	Seal (Fine and Gross)	1014		
	Visual examination		per visual criteria of Method 1009	
6	Solderability	2003	Soldering temperature of 260°C ± 10°C	LTPD = 15

Secondly, Method 5008 requires that all dice be electrically tested for DC parameters at 25°C prior to assembly onto the substrate. Although no manufacturer of high reliability monolithic devices would normally assemble devices with untested dice, there is no mandatory requirement in either Mil-Std-883 or Mil-M-38510 that those dice be tested prior to assembly. Since the electrical yield of a hybrid will be the cumulative yields of the individual dice (for example, a hybrid with one chip yielding 80%, two yielding 50% and one yielding 40% would be 8%, or .8 × .5 × .5 × .4), it is important that as many potentially unacceptable die as possible be weeded out prior to assembly.

3.1.1 Extended Die Testing

The problem of die yields has led to several developments. The most basic improvement in hybrid yields has been accomplished through the development of soft-gold probe tips which, when used with temperature chambers, allow electrical testing at the wafer level to be performed at several temperatures, both AC and DC, without disrupting the surface of the bonding pad in the manner that three or four tests with a conventional hard steel probe would. The soft-gold probe does not leave an impression in the metal of the bonding pad. With a conventional probe, the impression in the pad makes bonding difficult (or in some cases impossible) at the point where the probe makes contact, and multiple probing would leave insufficient bondable area on the pad.

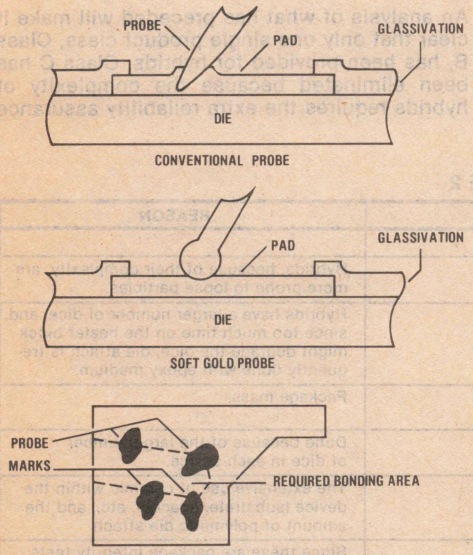

FIGURE 8

3.1.2 The Chip Carrier

Two other recent developments are of even greater value to the manufacturer of complex hybrids. Even if electrical yields of 100% could be guaranteed, the hybrids manufacturer must still contend with burn-in yields. A 10-chip hybrid where each chip yielded 95% through burn-in would have a cumulative yield of 60% ($.95^{10}$). Obviously, the ability to burn-in dice prior to assembly could allow radical improvements in yield. One method for doing so involves the use of an intermediate package called a leadless package or chip carrier (which looks like a small flat-pack with the leads removed). The chip carrier functions like a conventional package, but is small enough that it can be installed on a hybrid substrate which will later be installed in a larger package. For very complex dice (such as microprocessors) it affords the hybrid manufacturer a means of extensively testing a die before further assembly, thus avoiding expensive rework.

3.1.3 Die on Tape

A second method of accomplishing the same pretesting involves the use of die-on-tape. In this approach, which is still in the developmental stage, the die is attached to what looks like a small lead frame. The lead frame allows electrical access to the die for testing purposes and subsequently replaces bonding wires as a means of connecting the die to the substrate. An additional advantage is found in the fact that the lead frame is stronger than bonding wire. Chip-on-tape, however, has one drawback. Because the die itself is exposed, care must be taken in handling the tape, and all accelerated temperature testing, including burn-in, must be done in an inert atmosphere (such as dry nitrogen) to prevent corrosion of the bonding pads or any other exposed metal.

There are currently two approaches to chip on tape, one which requires bumps on the chip in order to attach it to the tape, the other of which has the necessary bump on the tape. The second approach seems to offer greater flexibility, since it allows the use of any dice rather than requiring specially prepared dice[4].

3.2 Pre-Seal Burn-In

One of the other differences between method 5008 and Method 5004 also directs itself toward the problem of die yields. 5008 allows an optional preseal burn-in. Preseal burn-in enables a manufacturer to remove infant mortality failures from the population and replace them

4. For further information on chip on tape, we would recommend "Gang Bonding to Standard Aluminumized Integrated Circuits with Bumped Interconnect Tape" by Carmen D. Burns and John W. Kanz (Solid State Technology, Vol. 21, No. 9, pp. 82-88).

with new dice prior to sealing. A manufacturer is limited to a single preseal burn-in. However, if cumulative burn-in failures run 60%, preburn-in would enable him to raise his yield to 84% (.60 + (.60 × .40), or the original yield plus the yield of the replaced dice), thus reducing his end item cost. Low initial yields on complex hybrids are not necessarily indicative of reliability problems. The yields are frequently due to the complexity of the devices and the large number of components involved. For this reason, a 10% PDA that would be perfectly realistic for a monolithic part might be excessively tight for a five-chip hybrid, where it would represent a PDA of slightly over 2% on each individual chip. For a five-chip device, a 41% PDA would provide a 10% per chip equivalent, but this would probably be unrealistically loose. One of the real challenges involved in the generation of a hybrid detail specification is to determine what the realistic PDA ought to be.

3.3 Bond Control

Once assembly begins, procedures must be implemented for bonder control. Each machine must be rechecked at the beginning of each shift, and each time the wire spool is changed. The large number of bonds (which can run into the hundreds) that may be present in a complex hybrid make bond strength even more critical. Further confirmation of bond strength is obtained by subjecting two samples from each bonding run to a sample non-destructive bond pull test. If this sample fails, 100% of the lot must be subjected to non-destructive bond pull.

3.4 100% Screening Requirements

The 100% screening of complex hybrids is similar to the monolithic device flow discussed in Chapter 4, but with the following modifications.

1. Internal visual, as mentioned above, is performed in accordance with Method 2017.
2. Stabilization Bake may be deleted when preseal burn-in is performed.
3. The 30,000 G centrifuge requirement of 5004 is relaxed to 10,000 G's, and may be satisfied alternately by performing mechanical shock at 3,000 G's (Method 2002, Condition C). This change was made because the complex hybrid with its heavy mass and large substrate cannot survive 30,000 G's.
4. An external visual inspection for package damage has been inserted between centrifuging and the preburn-in interim electrical testing. This was done because the larger packages tend to be more susceptible to damage during the screening process.
5. Seal testing (hermeticity) has been placed after burn-in (although a footnote allows the option of performing it immediately after the visual inspection mentioned in item 4).

3.5 Quality Conformance Testing

The Group A, B, and C testing is very similar to that specified for monolithic devices. Table 2 shows the differences, and the reasons for the changes. Group D testing is required only for package qualification (see 6.3.1).

4.0 Hybrid Product Assurance Classes

An analysis of what has preceded will make it clear that only one single product class, Class B, has been provided for hybrids. Class C has been eliminated because the complexity of hybrids requires the extra reliability assurance

TABLE 2

GROUP	CHANGE	REASON
A	No Change	
B, Sub 1	Adds PIND test	Hybrids, because of their complexity, are more prone to loose particles.
B, Sub 2	Add die shear test	Hybrids have a larger number of dice, and, since too much time on the heater block might degrade the dice, die attach is frequently done with epoxy medium.
C, Sub 1	Constant acceleration relaxed from 30K G's to 10K G's	Package mass.
C, Sub 2	Operating life LTPD changed from 5 to 10	Done because of the large number of dice in each device.
C, Sub 1	Water vapor content limit relaxed from 5,000 ppm to 6,000 ppm	The extensive use of ceramic within the device (substrate, spacers, etc.) and the amount of polymeric die attach.
C, Subs 3, 4	End point electricals not required	Since these are package integrity tests, electrical testing may not be meaningful.
C, Sub 4	Centrifuge relaxed to 10K G's	Package mass.

of burn-in. At the other end of the spectrum, hybrid technology, in many cases, does not lend itself to the requirements of Class S. Simple multichip devices could be processed to Class S, but true hybrids would be difficult. Some of the problems that would arise in Class S screening hybrids are discussed below.

4.1 Class S and Hybrids

First, manufacturers would have to contend with the complex logistics of performing wafer lot acceptance and maintaining wafer run traceability on dice that come from several different product lines covering several different technologies. For many of the dice, the procedures of Method 5007 could prove inapplicable (for example, SEM would prove meaningless on non-overlay transistor dice where the bond is placed directly over the contact). In many cases, this problem would be further complicated by the fact that many hybrid manufacturers purchase many of their dice from other sources.

Secondly, other than on the die itself, there are no provisions for tighter visual inspection for hybrids.

4.2 Particle Impact Noise Testing

One of the biggest problems involved, however, would be in the performance of Particle Impact Noise Detection testing. Many hybrids will fail PIND simply because of the way they are constructed. This can be seen by examining a cross-section diagram of a hybrid. For example,

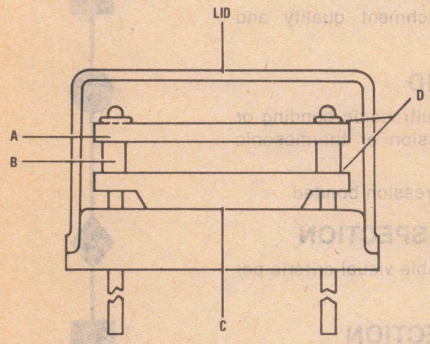

FIGURE 9

the upper substrate (A) could move laterally during vibration, causing the edge of the substrate to vibrate against the side of the package. In addition, the spacer (B) is held in place only by the upper substrate and is consequently free to vibrate up and down. If no mounting material is used under the lower substrate (C), it could vibrate against the package base. Additionally, if the lower substrate is at its maximum dimensional tolerance, it could be touching the side of the lid at some point and could therefore vibrate against it. One final complication is caused by the fact that, in order to minimize exposure of the device to high temperature, pins which are designed to be unconnected may not be fastened to the substrate with solder rings. This is also done, in many cases, to ensure that solder outflow at the time of attachment will not inadvertently connect those pins. As a result, the pin (D) could vibrate within the hole through which it passes through the substrate. All of these possible contact points will register on the detection equipment as impact noise, making it impossible to differentiate between background noise and loose particle noise. It should be noted that some manufacturers of complex custom hybrids use internal conformal coating (such as paralene) to prevent the movement of loose particles within the device cavity. This process, however, is presently used only on low volume, large cavity devices where the probability of particles would theoretically be higher. It is also a procedure that is difficult to implement on metal can hybrids. Many manufacturers currently have developmental studies under way to find solutions to the problem of PIND testing hybrids. They are beginning to achieve some testing success with smaller, single substrate devices.

5.0 Hybrid Reliability

The primary concern of Class S users is that the high number of components employed in a hybrid decrease its reliability. The factors for hybrid reliability established by MIL-HBK-217B reflect this consideration. However, this consideration must be viewed as somewhat artificial since the probable reliability of the hybrid should not be compared to the reliability of a single monolithic integrated circuit, but rather to the cumulative reliability of all the components that would be required to perform the same function in discrete form. Since the hybrid eliminates many packages and bond wires, use of hybrid circuits will not degrade system reliability, and will, in fact, frequently improve it.

6.0 Summary

Hybrids will continue to be utilized regularly in military systems. As monolithic devices reach higher levels of technical development and sophistication, enabling them to perform functions that were previously available only in hybrids, hybrid manufacturers will take these new chips and use them to push their art even further. Hybrids will remain on the leading edge of technology.

Standard Production Flow for Hermetic and Molded Packages

See 883/RETS Program for reliability process flow and group details.

HERMETIC **MOLDED**

INSPECTION

Incoming materials are inspected for conformance to applicable procurement specifications.

WAFER TEST

Die procured in wafer form are subjected to static and dynamic electrical tests to assure conformance to requirements.

SCRIBE AND BREAK

Wafers are separated into individual dice and electrical rejects are eliminated.

VISUAL INSPECTION

Method 2010 of MIL-STD-883 for IC dice and Method 2072 of MIL-STD-750 for discrete dice.

QUALITY INSPECTION

Sample visual inspection to above criteria.

DIE ATTACH

QUALITY INSPECTION

Sample inspection of die attachment quality and strength.

WIRE BOND

Hermetic: Aluminum wires with ultrasonic bonding or gold wires with thermocompression or thermosonic bonding.

Molded: Gold wires, thermocompression bonded.

PRECAP VISUAL INSPECTION

All units are inspected to applicable visual criteria per MIL-STD-883, Method 2017.1.

QUALITY INSPECTION

Random samples are checked to the above visual criteria.

FINAL SEAL ENCAPSULATION

STABILIZATION BAKE

MIL-STD-883, Method 1008, Cond. C, 150 °C, 24 hours.

TEMPERATURE CYCLE

MIL-STD-883, Method 1010, Cond. C.

Hermetic: −65 °C, +150 °C, 10 cycles.

CENTRIFUGE

MIL-STD-883, Method 2001, Cond. D, 20,000 G, Y1 direction only.

HERMETICITY

MIL-STD-883, Method 1014, Cond. B: Fine Leak.

MIL-STD-883, Method 1014, Cond. C2: Gross Leak.

ELECTRICAL TEST

MIL-STD-883, Method 5008, Para. 3.2.3.10: Static, dynamic, functional tests per specification.

QUALITY GROUP A ELECTRICAL TEST (TABLE I)

Sample size and quality levels per MIL-STD-883, Method 5008.

MARK, INSPECT, PACK

MIL-STD-883, Method 2009.1.

QUALITY INSPECTION

Marking, physical and electrical sample test to applicable specifications.

SHIP

National Semiconductor

883B/RETS™ Program

The National Semiconductor 883B/RETS™ Program was conceived with the intent of offering our customers a standardized, off-the-shelf, integrated circuit fully compliant to the current revision of MIL-STD-883.

The following specification outlines the program qualification, quality conformance and processing requirements. Records and data substantiating the testing as specified herein are controlled and administered through National Semiconductor Quality Assurance and Reliability group (located in Santa Clara, California) and are available for review.

As a complement to this program, the National Quality system is designed to encompass the requirements of MIL-Q-9858 and associated documents.

Tom Griffiths, Director
Quality Assurance and Reliability
National Semiconductor Corporation

1.0 Scope

1.1 Purpose

This specification establishes the requirements for screening and processing of integrated circuits in accordance with MIL-STD-883, Class B.

1.2 Intent

This specification is intended to provide the user with the ability to procure standardized, off-the-shelf integrated circuits manufactured by National Semiconductor Corporation that are fully compliant to MIL-STD-883.

2.0 Applicable Documents

The following specifications and standards, of the issue in effect on the date of invitation for bids or request for proposal, form a part of this specification to the extent specified herein.

2.1 Specifications

Military

MIL-M-55565	Microcircuits, Packaging of
MIL-M-38510	General Specification for Microcircuits
MIL-C-45662	Calibration System Requirements
MIL-Q-9858	Quality System Requirements

2.2 Standards

Military

MIL-STD-105	Sampling Procedures and Tables
MIL-STD-883	Test Methods and Procedures for Microelectronics

2.3 Detail Specifications

The detail specification for a particular 883B/RETS™ microcircuit is the manufacturer's RETS (Reliability Electrical Test Specification, see *Figure 2*).

3.0 General Requirements

The individual requirements shall be as specified herein and in accordance with the applicable detail specification. The static and dynamic electrical performance requirements and electrical test methods shall be as specified in the detail specification.

3.1 Process Conditioning, Testing, Reliability and Quality Assurance Screening

Process conditioning, screening and testing shall be as specified in Section 4.0.

MIL-STD-883 Q.A. Process Level	Applicable Process Flow Chart	Suffix Level Indicator
B	*Figure 1a*	/883B

3.1.1 Qualification

The 883B/RETS™ microcircuits furnished under this specification shall be products which have been produced and tested and have passed the qualification tests specified herein. Successful qualification for a given level results in qualification approval for that level and all lower products assurance levels of that device (reference appendix E MIL-M-38510D).

3.1.2 Alternate Qualification

In lieu of meeting the requirements of 3.1.1, the manufacturer may establish qualification by performing an initial, one time qualification test. Qualification testing shall be performed on each generic family supplied. Upon successful completion of the qualification program, the manufacturer shall remain qualified for a period not to exceed 12 months.

3.2 Quality Conformance Inspection

The 883B/RETS™ microcircuits furnished under this specification shall be products which have been produced and tested in conformance with all the provisions of this specification for the applicable level. Devices which have been accepted as conforming to a given product assurance level may be furnished as conforming to any other level for which they meet or exceed the quality conformance requirements.

3.3 Marking

3.3.1 Marking on Each Device

The following marking shall be placed on each microcircuit:

a) Index point (see 3.3.4)
b) Part number (see 3.3.5)
c) Product assurance level (see 3.3.6)
d) Inspection lot identification code (see 3.3.8)
e) Manufacturer's Identification (see 3.3.9)

3.3.2 Marking on Initial Container

All of the marking specified in 3.3.1, except the index point, shall appear on the initial protection or wrapping for delivery.

3.3.3 Marking Permanence

Marking shall be permanent in nature and remain legible after testing. Damage to marking caused by mechanical fixturing in Group B and C tests shall not be cause for lot rejection.

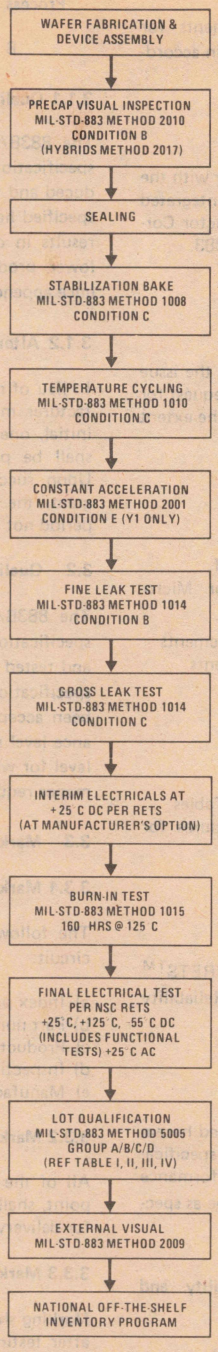

FIGURE 1. MIL-STD-883 Screening

RETS111X (A)
Revision B

Burn-In-Circuits:
H: 8358HR; F: 8359HR; D: 8665HR (B)

Test System: Teradyne J-273 (C)
RL-111XRI RL-111XHG RL-111XLG

Test Conditions (Unless Otherwise Specified):
V_{CC} = 15V, V_{CM} = 0V, V_{OUT} = 1.4V with respect to $V_{CC}-$, V_{56} = 0V, R_S = 0V

NOTES	Parameter	Symbol	Test Conditions		Δ Test Number	Test Number	Subgroup 1 +25°C Min	Subgroup 1 +25°C Max	Subgroup 2 +125°C Min	Subgroup 2 +125°C Max	Subgroup 3 −55°C Min	Subgroup 3 −55°C Max	Optional Drift Δ Limits (25°C)	Units of Measure
	Input Offset Voltage	V_{IO}	V_{CM} = +13.5V, −14.5V and 0V	(note 4)	105, 113	5, 13, 20		3.0		4.0		4.0	±0.5	mV
			R_S = 50KΩ, V_{CM} = +13.5V, −14.5V and 0V		106, 114, 121	6, 14, 21		3.0		4.0		4.0	±0.5	mV
			V_{85} = V_{86} = 0V, V_{CM} = +13.5V, −14.5V, 0V			8, 16, 23		3.0						mV
			V_{85} = V_{86} = 0V, V_{CM} = +13.5V, −14.5V, 0V, R_S = 50KΩ			9, 17, 24		3.0						mV
			V+ = 4.5V, V− = 0V, V_{OUT} = 0.4V, V_{CM} = 3V, 0.5V			27, 29		5.0		6.0		6.0		mV
			V+ = 4.5V, V− = 0V, V_{OUT} = 4.5V, V_{CM} = 3V, 0.5V			28, 30		3.0		4.0		4.0		mV
	Input Offset Current	I_{IO}	R_S = 50KΩ, V_{CM} = +13.5V, −14.5V, 0V			7, 15, 22		10		20		20		nA
			V_{85} = V_{86} = 0V, R_S = 50KΩ, V_{CM} = 13.5V, −14.5V, 0V			10, 18, 25		30						nA
	Input Bias Current	I_{IB}	R_S = 50kΩ, V_{CM} = +13.5V, −14.5, 0V	(note 5)	126	11, 19, 26		100		100		150	±10	nA
	Large Signal Gain	A_{VS}	R_L = 1KΩ, V_{OUT} = −12V to +35.0V			31	40		30		30			V/mV
	Emitter Follower Gain	A_{VEF}	R_L = 600Ω, V_1 = −15V to +12V			32	10		8		8			V/mV
	Common Mode Rejection Ratio	C_{MRR}	+13.5V ≥ V_{CM} ≥ −14.5V			12	80		80		80			dB
6	Negative Supply Current	I_{CC-}			101	1		−5		−5		−15	±5	mA
6	Positive Supply Current	I_{CC+}				2		6		6		15		mA
	Input Leakage Current	I_{IL1}	V_{CC} = ±18V, V_{28} = 1V, V_{38} = 30V, V_{OUT} = 50V with respect to $V_{CC}-$			3		10		30				nA
		I_{IL2}	V_{CC} = ± V_{28} = 30V, V_{38} = 1V, V_{OUT} = 50V with respect to $V_{CC}-$			4		10		30				nA
	Output Leakage Current	I_{LOUT}	V_{CC} = ±18V, 15 + 15 = 5mA, V_{OUT} = 35V with respect to $V_{CC}-$			33		10		500				nA
	Ground Leakage Current	I_{LG}	As in I_{LOUT}			34		25		500				nA
	Saturation Voltage	V_{SAT}	I_{OUT} = 50mA, V_{IN} = −5mV			35		1.5						V
			I_{OUT} = 8mA, V_{IN} = −6mV			36		0.4		0.4		0.4		V
2	Strobe ON Current	I_{STR}						4.0						mA
							subgroup 9							
3	Response Time	t_{resp}	Test Box 8022HR (F)			(D)		400					(E)	ns

Note 4: Δ computed at V_{CM} = +13.5V and −14.5V only
Note 5: Δ computed at V_{CM} = 0V only
Note 6: −55°C tests are for continuity check only

SAMPLE ONLY

The RETS details National's standard electrical testing with the following key information clearly identified:
A. RETS number and revision level.
B. Standard Burn-in circuits.
C. Basic Test system, test tapes and revisions.
D. Test numbers (including Δ tests)
E. Recommended Δ's (which are standard on 883S/RETS™ microcircuits).
F. Special test equipment (where applicable).
G. Clear definition of test conditions.
H. Clear footnotes, where necessary.
I. Part number and function.

Note 1: Parameter tested go no-go only, cannot be data logged.
Note 2: Guaranteed parameter, no testing is available.
Note 3: Guaranteed parameter, may be tested only on a special order basis.

Device: LM111 (I) **Function:** Voltage Comparator

3.3.4 Index Point

The index point indicating the starting point for numbering of leads and/or mechanical orientation of the integrated circuit may be a tab, color dot, or other suitable indicator.

3.3.5 Part Number

The part number shall be the manufacturer's generic part number.

3.3.6 Product Assurance Level

Integrated circuits shall be marked with a code indicating the product assurance level to which they have been tested and found to conform. The code shall consist of /883 followed by the letter B.

3.3.7 Formation of Lots

Microcircuits shall be assembled into inspection lots as required to meet the product assurance inspection and test requirements of this specification. An inspection sublot shall consist of microcircuits of a single type contained on a single detail specification, manufactured on the same production line(s) through final seal by the same product techniques, and to the same device design rules and package with the same material requirements, and within the same period not exceeding 6 weeks.

3.3.8 Inspection Lot Identification Code

Integrated circuits shall be marked by a 4-digit date code indicating the date the lot was submitted for inspection. The first 2 numbers in the code shall be the last 2 digits of the number of the year. The third and fourth numbers shall be 2 digits indicating the calendar week of the year. When the number of the week is a single digit, it shall be preceded by a zero. Reading from left to right, the code number shall designate year, year, week, week.

3.3.9 Manufacturer's Identification

Integrated circuits shall be marked with the name, logo, or trademark of the manufacturer.

4.0 Conditions and Methods of Test

Conditions and methods of test shall be in accordance with Method 5004 of MIL-STD-883 and as specified herein on a 100% basis. The general requirements of MIL-STD-883 apply as applicable. This section establishes the stress screening tests and quality conformance inspection tests for this program. The purpose of these tests is to assure the quality and reliability of the product to a particular process level commensurate with the product's intended application.

4.1 Internal Visual Inspection (Precap)

Internal visual inspection shall be performed per MIL-STD-883, Method 2010, Condition B. Hybrid internal visual shall be performed per Method 2017.

4.2 Stabilization Bake

Stabilization bake shall be performed per MIL-STD-883, Method 1008, Condition C. The devices shall be stored for 24 hours minimum at 150°C minimum. No end point measurements shall be performed.

4.3 Temperature Cycling

Temperature cycling shall be performed per MIL-STD-883, Method 1010, Condition C, 10 cycles, from −65°C to +150°C.

4.4 Constant Acceleration

Constant acceleration shall be performed per MIL-STD-883, Method 2001. Condition E, at 30,000 G's, in Y1 plane only.

4.5 Hermeticity

Hermeticity tests shall be performed per the following:

Fine Leak Testing

Fine leak testing shall be performed per MIL-STD-883, Method 1014, Condition B. The criterion for rejection will be in accordance with MIL-STD-883.

Gross Leak Testing

Gross leak testing shall be performed per MIL-STD-883, Method 1014, Condition C. The rejection criterion will be per MIL-STD-883.

4.6 Interim Electrical Parameters

Interim electrical parameters shall be the 25°C DC parameters, specified in the detail specification (RETS). (Interim electrical parameters are performed at the manufacturer's option.)

4.7 Burn-In

Burn-in shall be performed per MIL-STD-833, Method 1015; Conditions A, B, C or D on all Class B devices. (Burn-in condition varies with product type.)

The ambient temperature shall be 125°C.

4.8 Final Electrical Parameters

Final electrical parameters shall be as specified in the applicable detail specification (RETS). DC testing shall be performed at 25°C, −55°C, 125°C. AC testing shall be performed at 25°C. The PDA (Percent Defective Allowable) shall be 10% maximum and shall only apply to DC measurements at 25°C.

4.9 External Visual Inspection

All 883B/RETS™ microcircuits shall receive external visual inspection per MIL-STD-883, Method 2009.

5.0 Quality Assurance Provisions

5.1 Quality Conformance Inspection

Quality conformance inspection shall be in accordance with Tables I, II, III and IV. Inspection lot sampling shall be in accordance with Method 5005 of MIL-STD-883. Inspection lots failing to meet quality conformance inspection for a given product assurance level shall be rejected.

5.1.1 Group A Inspection

Group A inspection shall consist of the electrical parameters in the RETS (Reliability Electrical Test Specification). If an inspection lot is made up of a collection of sublots, each sublot shall be subjected to Group A, as specified, (see Table 1).

5.1.2 Group B Inspection

Group B inspection consists of construction testing. This sample test sequence includes physical dimensions, resistance to solvents, internal visual and mechanical, bond strength and solderability (see Table II). The Group B qualifies the inspection sublot the sample is pulled from. It also qualifies all generically similar devices if the date code is within 6 weeks of the sample date code.

5.1.3 Group C Inspection

Group C inspection consists of die stress testing. This sample test sequence includes operating life, temperature cycling, constant acceleration, hermeticity, visual examination and end point electricals (see Table III). A Group C qualifies the lot the sample is pulled from and all generically similar die types for a period of 90 days.

5.1.4 Group D Inspection

Group D testing further stresses the package and the die. The Group D tests include physical dimensions, lead integrity, hermeticity, thermal shock, temperature cycling, moisture resistance, mechanical shock, vibration variable frequency, constant acceleration, salt atmosphere, visual examination, and end point electricals (see Table IV). A Group D qualifies the lot the sample is pulled from and all devices built in the same package for a period of 6 months.

TABLE I. GROUP A ELECTRICAL TEST

SUBGROUPS	CLASS B LTPD
Subgroup 1 Static tests at 25°C	5
Subgroup 2 Static tests at maximum rated operating temperature	7
Subgroup 3 Static tests at minimum rated operating temperature	7
Subgroup 4 Dynamic tests at 25°C	5
Subgroup 5 Dynamic tests at maximum rated operating temperature	7
Subgroup 6 Dynamic tests at minimum rated operating temperature	7
Subgroup 7 Functional tests at 25°C	5
Subgroup 8 Functional tests at maximum and minimum rated operating temperature	10
Subgroup 9 Switching tests at 25°C	7

TABLE II. GROUP B INSPECTION

TEST	METHOD	CONDITIONS	CLASS B
Subgroup 1 Physical dimension	2016		2 devices (No failures)
Subgroup 2 a) Resistance to solvents	2015		3 devices (No failures)
Subgroup 3 Solderability	2003	Soldering temperature of 260±10°C	15 leads (3 units min No failures)
Subgroup 4 Internal visual and mechanical	2014	Failure criteria from design & construction requirements of applicable procurement document	1 device (No failures)
Subgroup 5 Bond strength	2011	Test condition C or D	15 Bonds (10 units min No failures)

TABLE III. GROUP C INSPECTION

TEST	METHOD	CONDITIONS	CLASS B LTPD (MAX ACC = 1)
Subgroup 1 Operating Life Test End point electricals	1005	Test conditions to be specified 1000 hours @ +125°C as specified in the applicable detail specification (+25°C)	5
Subgroup 2 Temperature cycling Constant acceleration Seal Fine Gross Visual examination End point electrical parameters	 1010 2001 1014 1010	 Test condition C Test condition E, Y1 axis As applicable As specified in applicable device specification (+25°C)	15

TABLE IV. GROUP D INSPECTION			
TEST	METHOD	CONDITIONS	CLASS B LTPD (MAX ACC = 1)
Subgroup 1			
Physical dimensions	2016		15
Internal water vapor	1018		3 devices (No failures)
Subgroup 2			
Lead integrity	2004	Test conditions B2 (lead fatigue)	
Seal	1014	As applicable	
Fine			
Gross			
Subgroup 3			
Thermal shock	1011	Test condition B – 15 cycles	15
Temperature cycling	1010	Test condition C – 100 cycles	
Moisture resistance	1004		
Seal	1014	As applicable	
Fine			
Gross			
Visual examination	1004		
End point electrical parameters		As specified in the applicable device specification (+25°C)	
Subgroup 4			
Mechanical shock	2002	Test condition B	15
Vibration variable freq.	2007	Test condition A	
Constant acceleration	2001	Test condition E, Y, Axis	
Seal	1014	As applicable	
Fine			
Gross			
Visual examination	1010 or 1011		
End point electrical parameters		As specified in the applicable device specification (+25°C)	
Subgroup 5			
Salt atmosphere	1009	Test condition A	15
Seal	1014	As applicable	
Visual examination	1009	Paragraph 3.3.1 of Method 1009	

883 PROCESS FLOW

TEST	MIL-STD-883 METHOD	TTL, LS, LOW POWER CMOS, LINEAR, MOS/LSI, MEMORY	HYBRID
Internal visual	2010, Cond. B	100%	100% (Method 2017)
Bake	1008, Cond. C	100%	100%
Temperature cycling	1010, Cond. C	100%	100%
Constant acceleration	2001, Cond. E	100%	100%
Fine leak	1014, Cond. B	100%	100%
Gross leak	1014, Cond. C	100%	100%
Burn-in	1015, Cond. A, B, C or D	100%	100%
Electrical test	Per the applicable detail specification	100% RETS	
Group A		LTPD Sample (RETS)	
External visual	2009	100%	100%

6.0 DATA

6.1 Certificate of Conformance

All 883B/RETS™ microcircuits shipped shall be accompanied by a Certificate of Conformance as shown on the opposite page.

6.2 Attributes Data

Attributes data for 100% screening will not normally be provided, but shall be retained on file. Copies are available at nominal cost.

6.3 Quality Conformance Data

Quality conformance data will not normally be provided, but shall be retained on file. Copies are available at nominal cost.

883B/RETS™ MICROCIRCUITS FROM National Semiconductor Corporation

CERTIFICATE OF CONFORMANCE

TEST	MIL-STD-883 METHOD**	REQUIREMENT
INTERNAL VISUAL	2010B	100%
STABILIZATION BAKE	1008 C 24 HRS @ +150°C	100%
TEMPERATURE CYCLING	1010 C 10 CYCLES −65°C/+150°C	100%
CONSTANT ACCELERATION	2001 E	100%
FINE LEAK	1014 B 5×10^{-8}	100%
GROSS LEAK	1014 C2	100%
BURN-IN	1015 160 HRS @ +125°C	100%
FINAL ELECTRICAL	+25°C DC PER NSC RETS	100%
PDA	10% MAX ALLOWABLE	
	+125°C DC PER NSC RETS	100%
	−55°C DC PER NSC RETS	100%
	+25°C AC PER NSC RETS	100%
QA ACCEPTANCE	LTPD SAMPLE	
EXTERNAL VISUAL	2009	100%

* RETS = REL ELECTRICAL TEST SPECIFICATION
** All METHODS TO CURRENT REVISION LEVELS

THIS IS TO CERTIFY THAT ALL 883B/RETS™ MICROCIRCUITS SUPPLIED TO YOUR PURCHASE ORDER COMPLY WITH ALL THE REQUIREMENTS, SPECIFICATIONS AND DOCUMENTS PERTINENT TO NATIONAL'S 883B/RETS™ MICROCIRCUIT PROGRAM. ALL TEST DATA AND CERTIFICATION IS ON FILE AT OUR FACILITY.

Part Number _____
P.O. Number _____
Date Code(s) _____
Lot Code(s) _____

_____
QUALITY ASSURANCE REPRESENTATIVE

National Semiconductor

Physical Dimensions

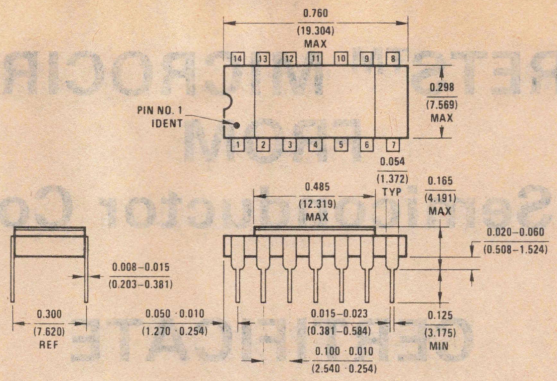

NS Package D14E
14-Lead Cavity DIP (D)
(Side Brazed)

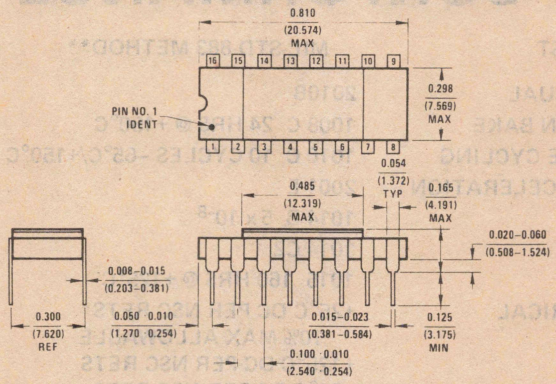

NS Package D16C
16-Lead Cavity DIP (D)
(Side Brazed)

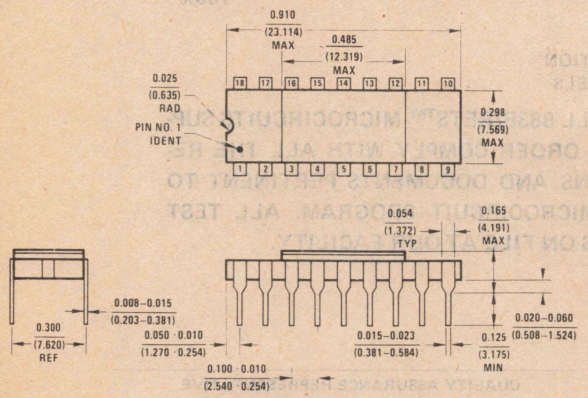

NS Package D18A
18-Lead Cavity DIP (D)
(Side Brazed)

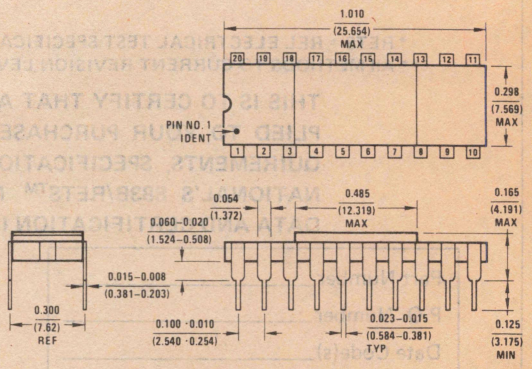

NS Package D20A
20-Lead Cavity DIP (D)

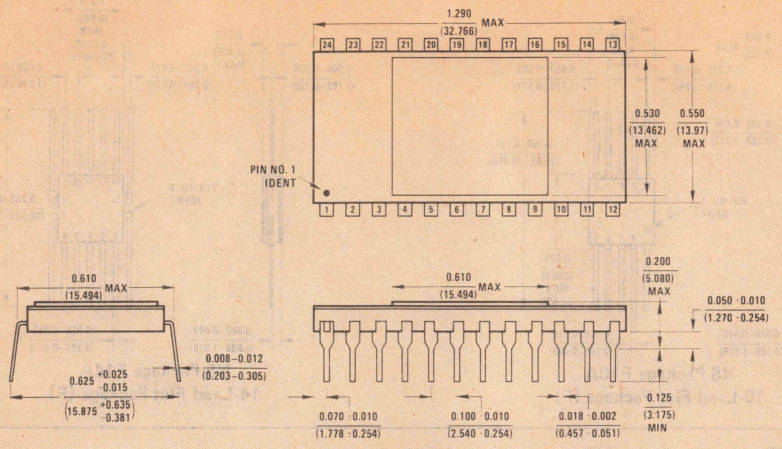

NS Package D24A
24-Lead Cavity DIP (D)

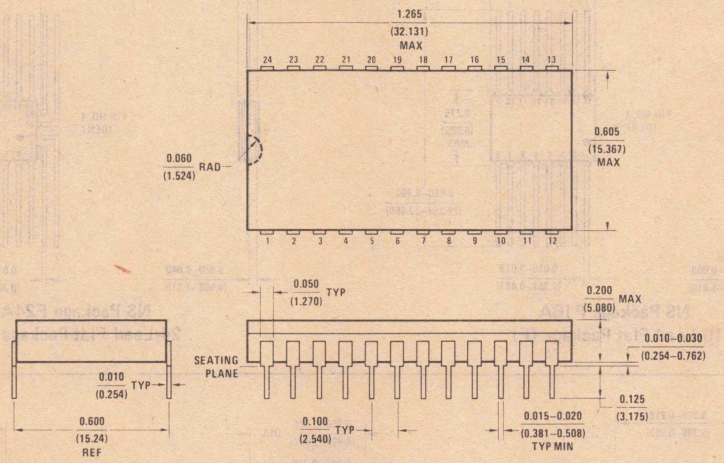

NS Package D24D
24-Lead Cavity DIP (D)

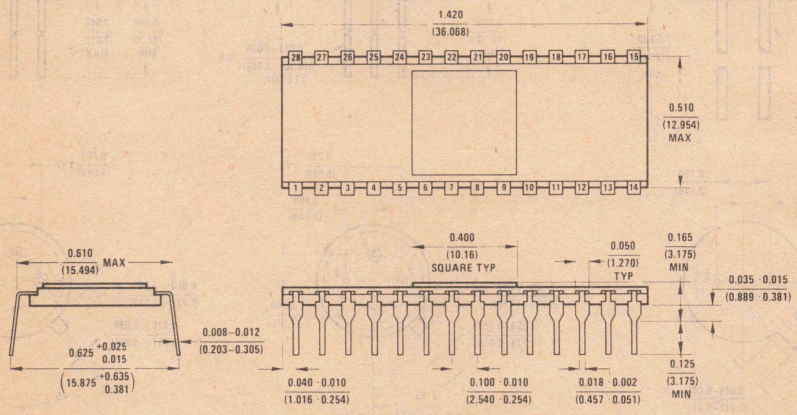

NS Package D28D
28-Lead Cavity DIP (D)

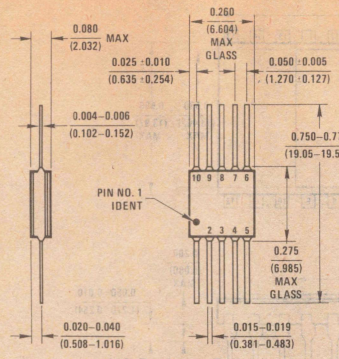

NS Package F10A
10-Lead Flat Package (F)

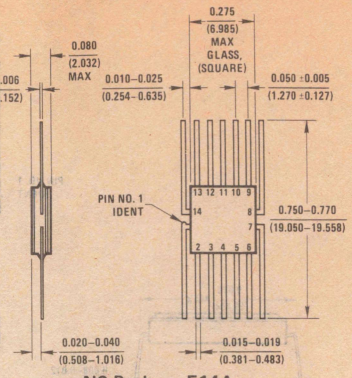

NS Package F14A
14-Lead Flat Package (F)

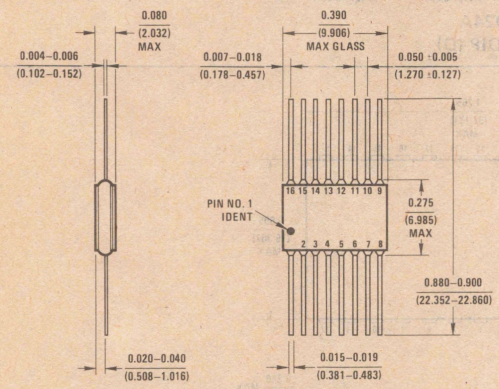

NS Package F16A
16-Lead Flat Package (F)

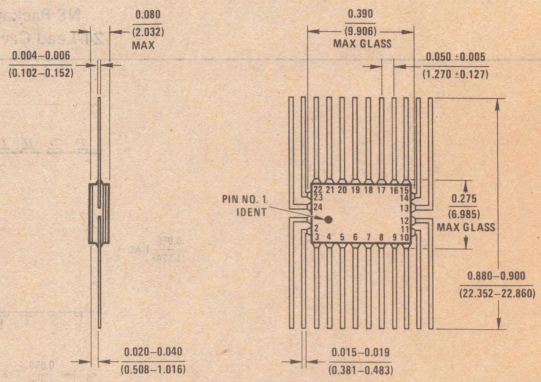

NS Package F24A
24-Lead Flat Package (F)

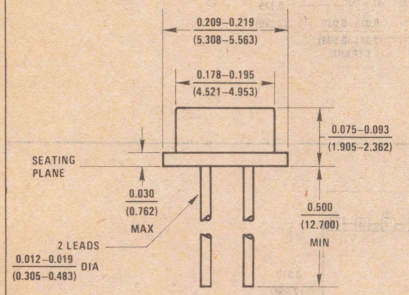

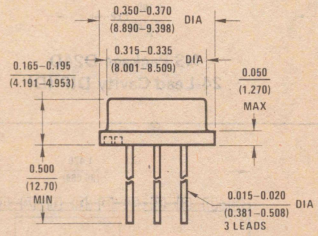

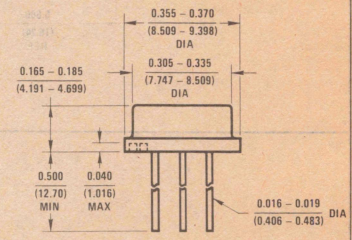

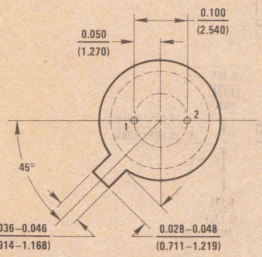

NS Package H02A
2-Lead TO-46 Metal Can Package (H)

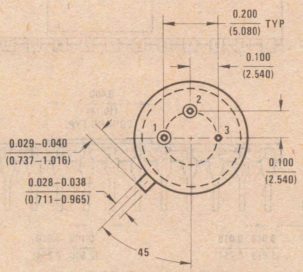

NS Package H03A
3-Lead TO-39 Metal Can Package (H)

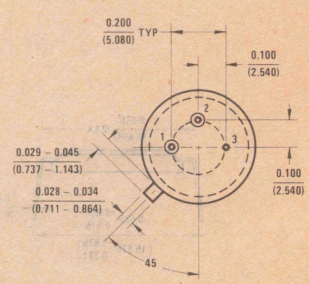

NS Package H03B
3-Lead TO-5 Metal Can Package (H)

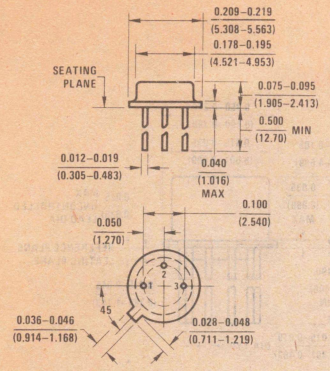

NS Package H03H
3-Lead TO-46 Metal Can Package (H)

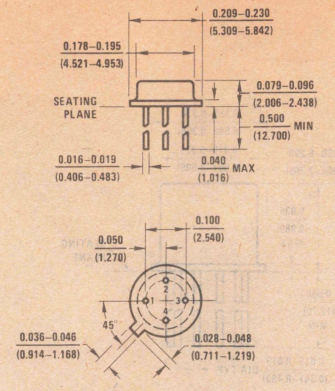

NS Package H04A
4-Lead TO-46 Metal Can Package (H)

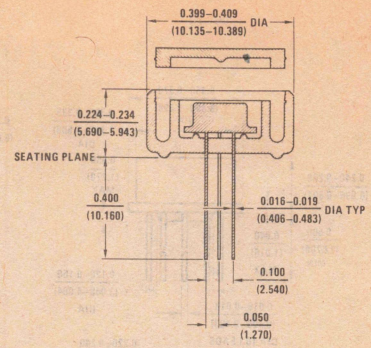

NS Package H04D
Thermal Shield for H04A

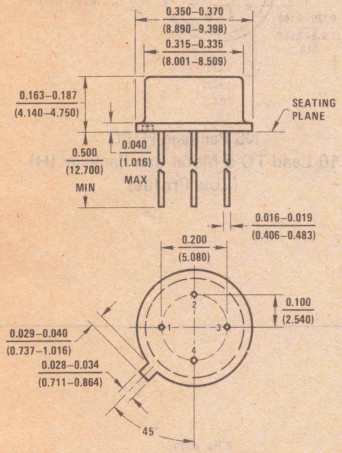

NS Package H04B
4-Lead TO-5 Metal Can Package (H)

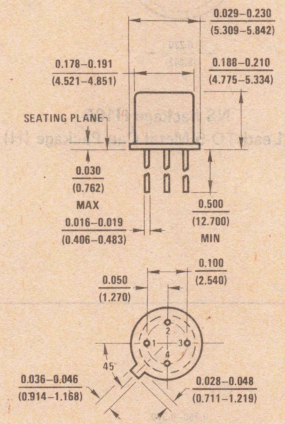

NS Package H04C
4-Lead TO-72 Metal Can Package (H)

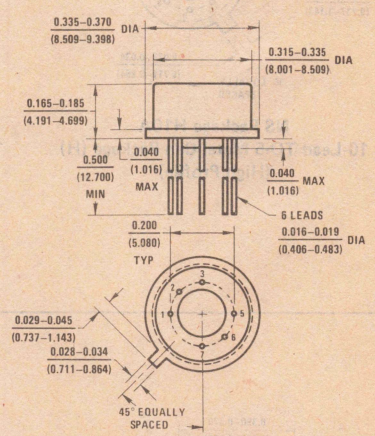

NS Package H06C
6-Lead TO-5 Metal Can Package (H)

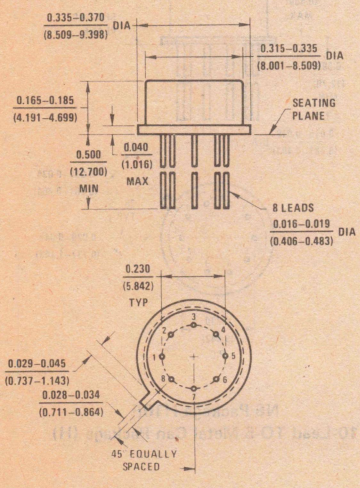

NS Package H08A
8-Lead TO-5 Metal Can Package (H)

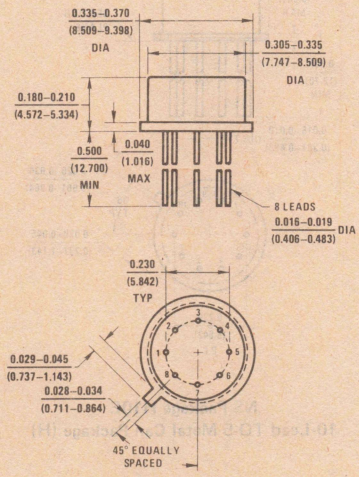

NS Package H08B
8-Lead TO-5 Metal Can Package (H)

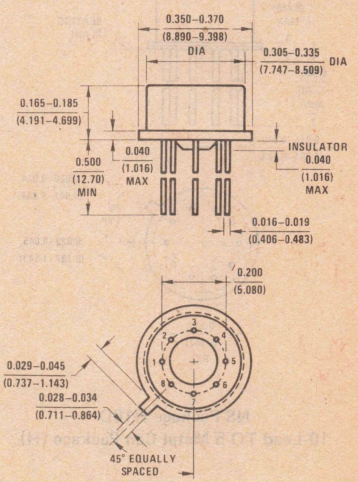

NS Package H08C
8-Lead TO-5 Metal Can Package (H)

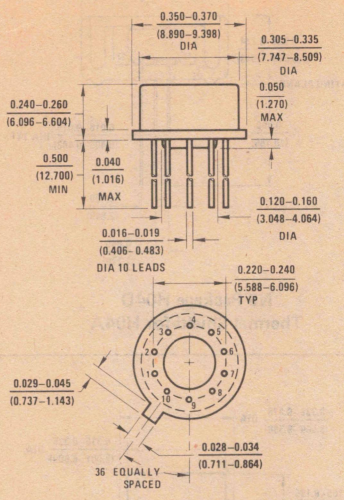

NS Package H10A
10-Lead TO-5 Metal Can Package (H)
(High Profile)

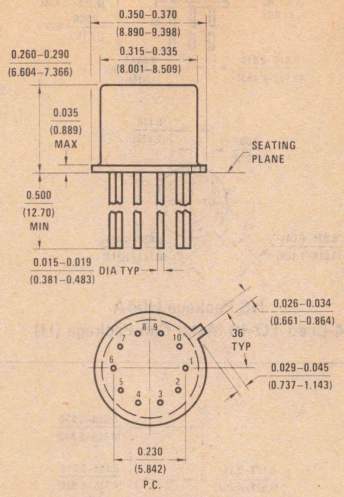

NS Package H10B
10-Lead TO-5 Metal Can Package (H)

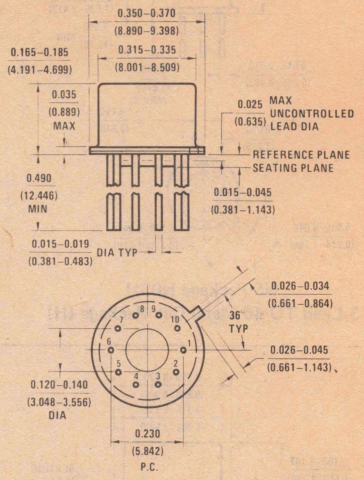

NS Package H10C
10-Lead TO-5 Metal Can Package (H)
(Low Profile)

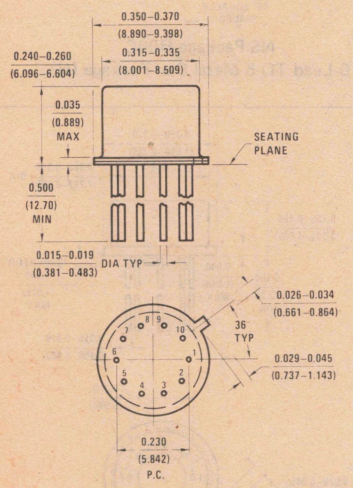

NS Package H10D
10-Lead TO-5 Metal Can Package (H)

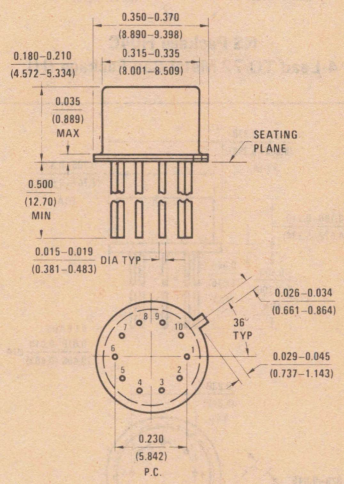

NS Package H10E
10-Lead TO-5 Metal Can Package (H)

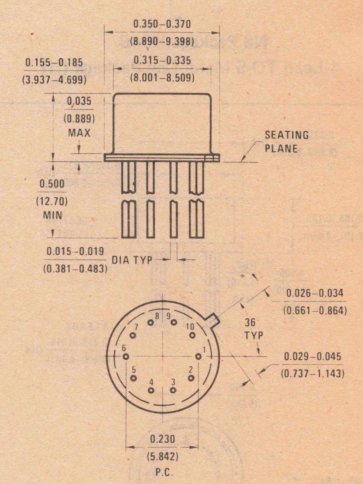

NS Package H10F
10-Lead TO-5 Metal Can Package (H)

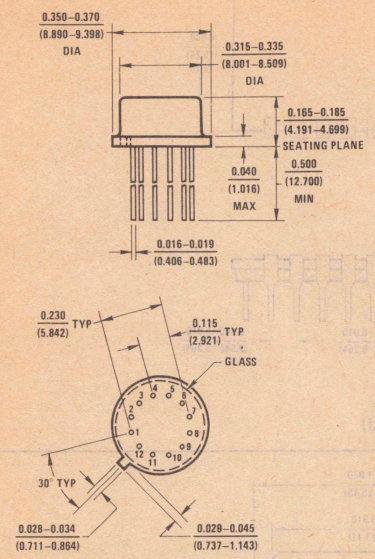

NS Package H12A
12-Lead TO-8 Metal Can Package (H)

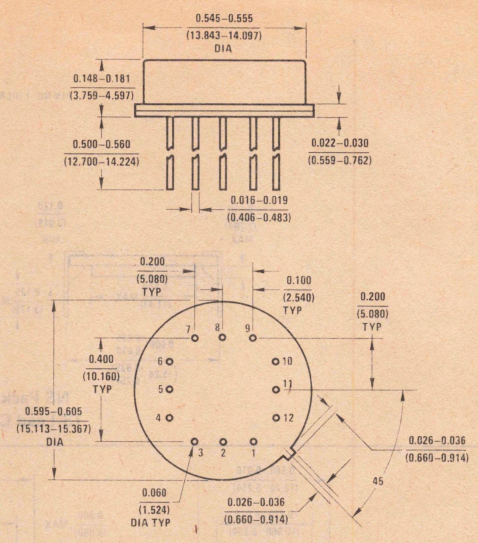

NS Package H12B
12-Lead TO-8 Metal Can Package (H)

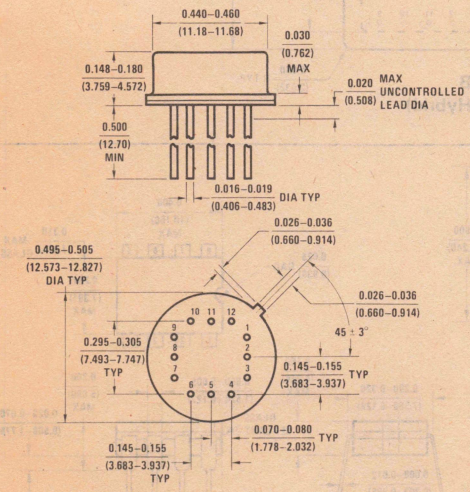

NS Package H12C
12-Lead TO-8 Metal Can Package (H)

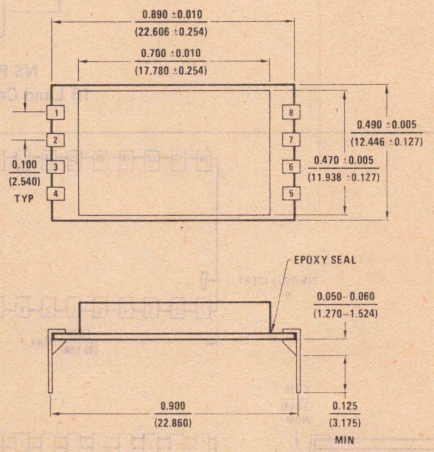

NS Package HY08A
8-Lead Cavity DIP (J) (Hybrid)

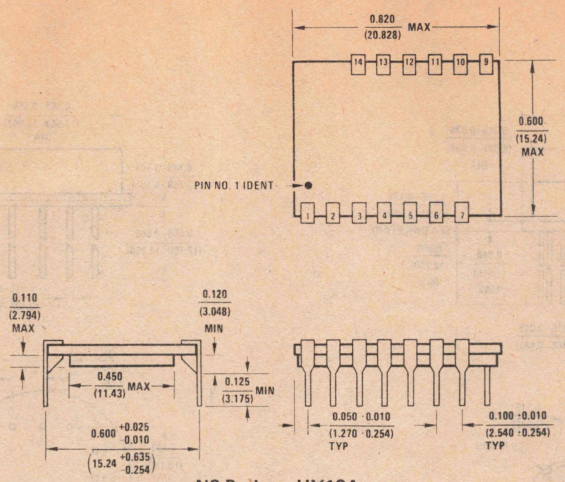

NS Package HY13A
13-Lead Cavity DIP (J)

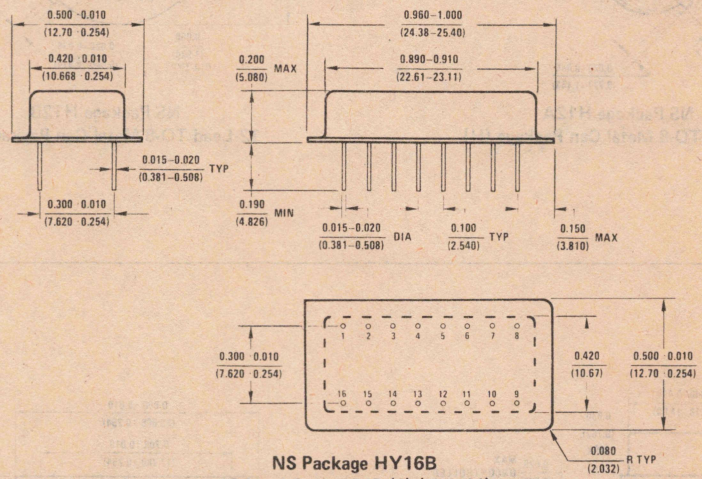

NS Package HY16B
16 Lead Cavity DIP (J) (Hybrid)

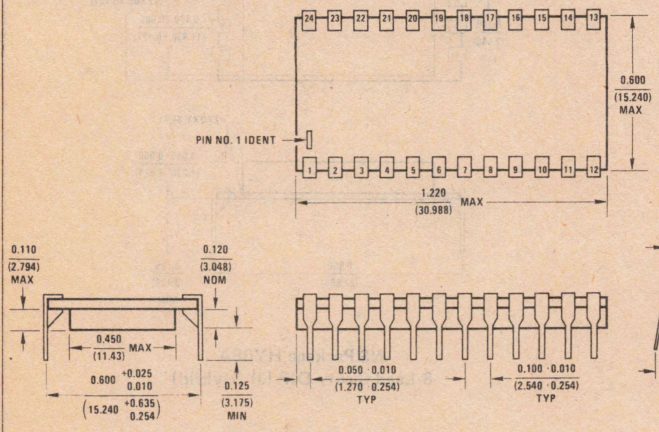

NS Package HY24A
24-Lead Cavity DIP (J)
(Hybrid Side Brazed)

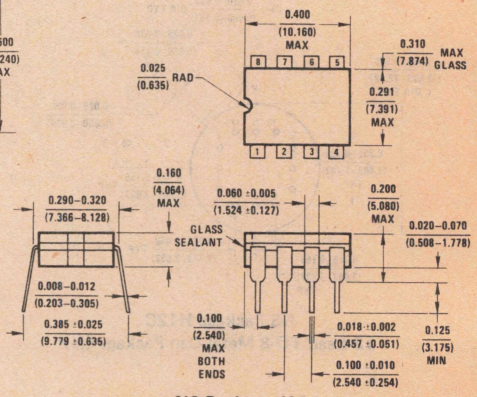

NS Package J08A
8-Lead Cavity DIP (J)

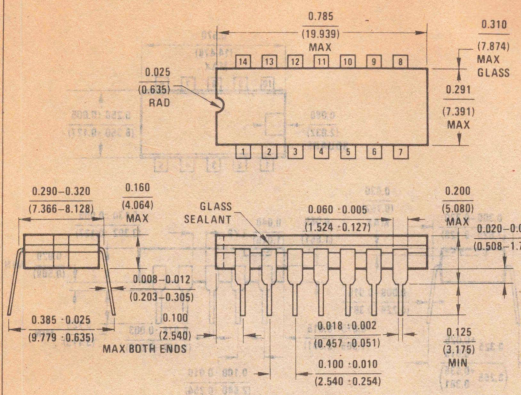

NS Package J14A
14-Lead Cavity DIP (J)

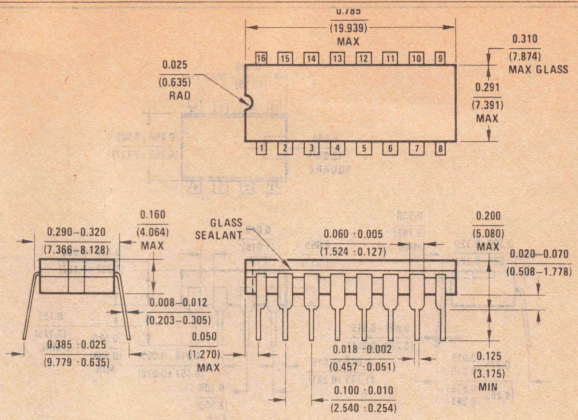

NS Package J16A
16-Lead Cavity DIP (J)

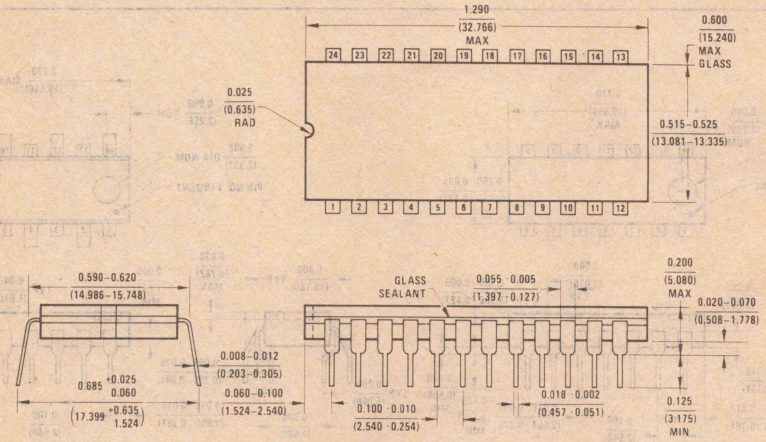

NS Package J24A
24-Lead Cavity DIP (J)

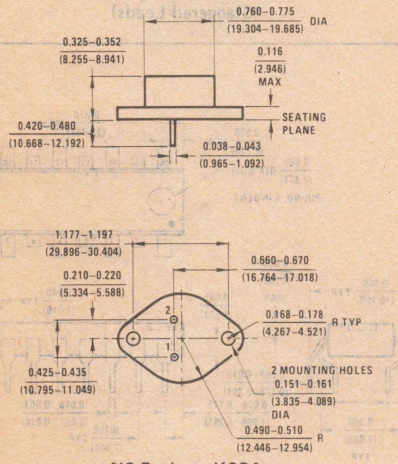

NS Package K02A
2-Lead TO-3 Metal Can Package (K)
(Steel)

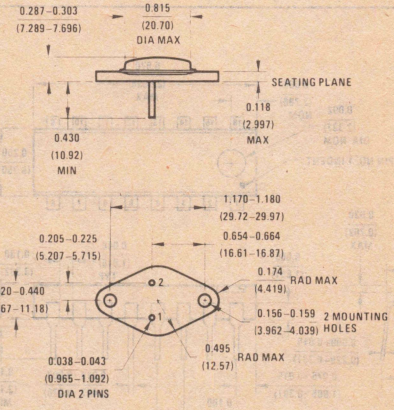

NS Package KC02A
2-Lead TO-3 Metal Can Package (KC)
(Aluminum)

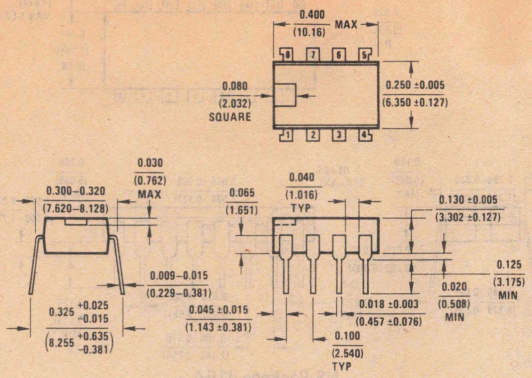

NS Package N08B
8-Lead Molded Mini-DIP (N)

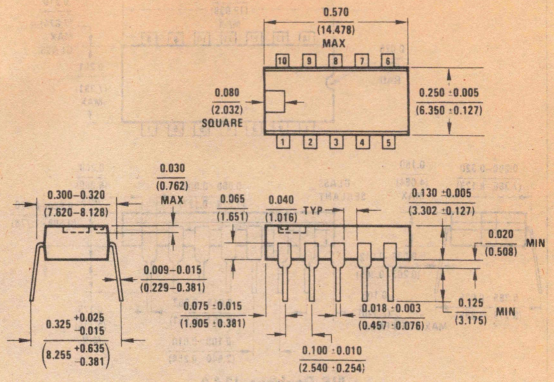

NS Package N10B
10-Lead Molded DIP (N)

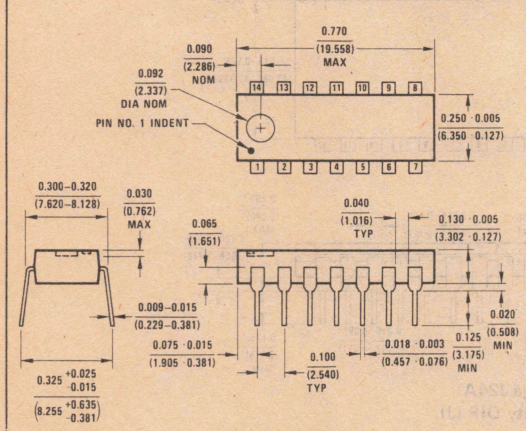

NS Package N14A
14-Lead Molded DIP (N)

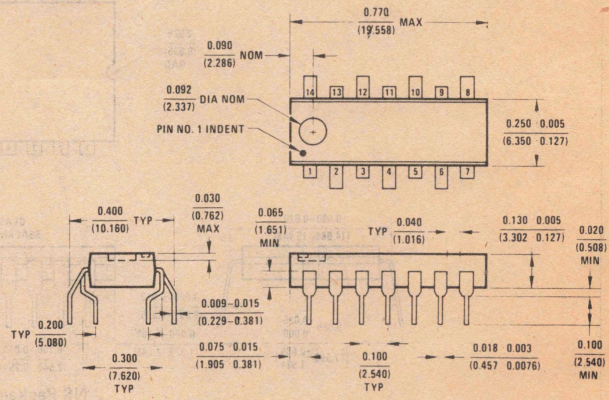

NS Package N14C
14-Lead Molded DIP (N-01)
(Staggered Leads)

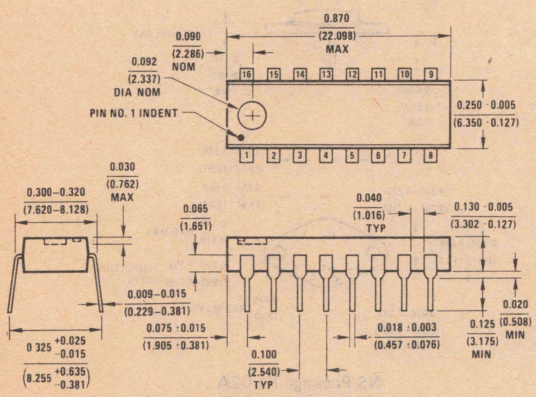

NS Package N16A
16-Lead Molded DIP (N)

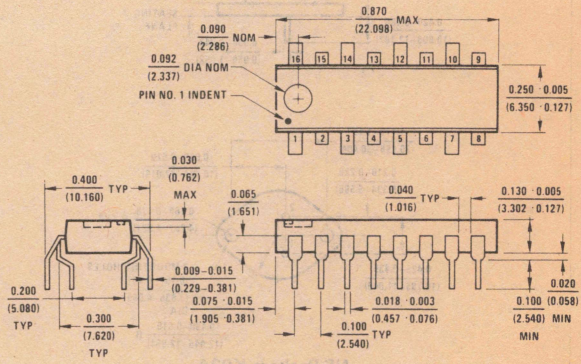

NS Package N16C
16-Lead Molded DIP (N-01)
(Staggered Leads)

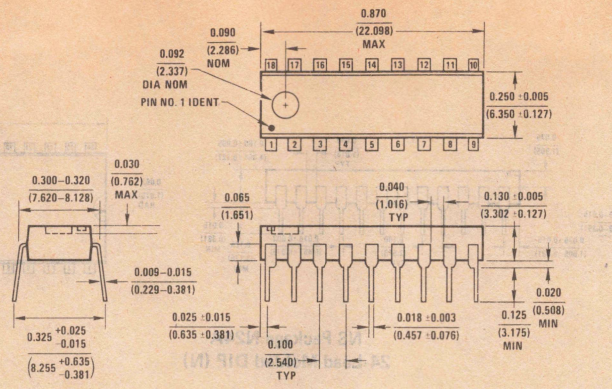

NS Packge N18A
18-Lead Molded DIP (N)

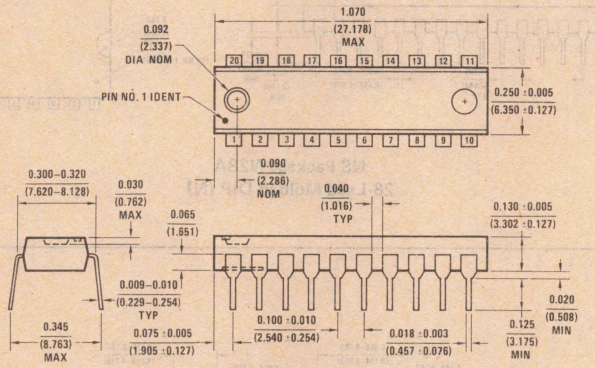

NS Package N20A
20-Lead Molded DIP (N)

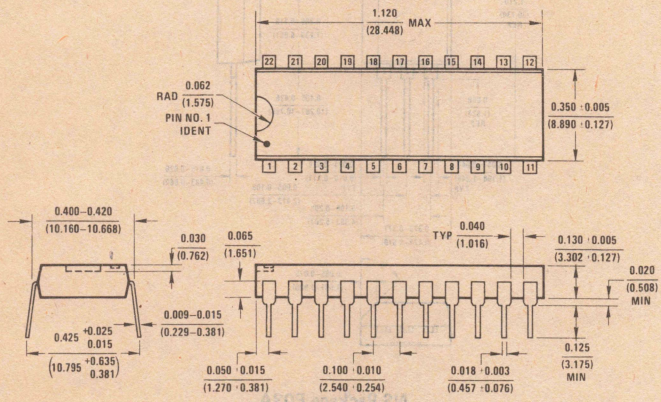

NS Package N22A
22-Lead Molded DIP (N)

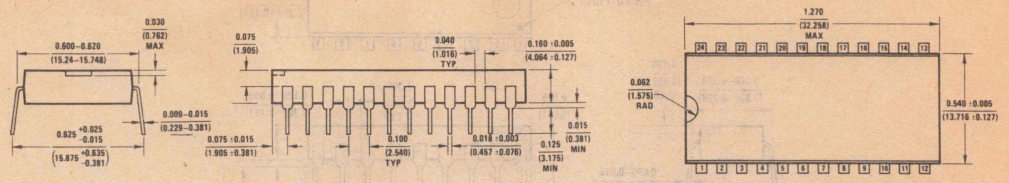

NS Package N24A
24-Lead Molded DIP (N)

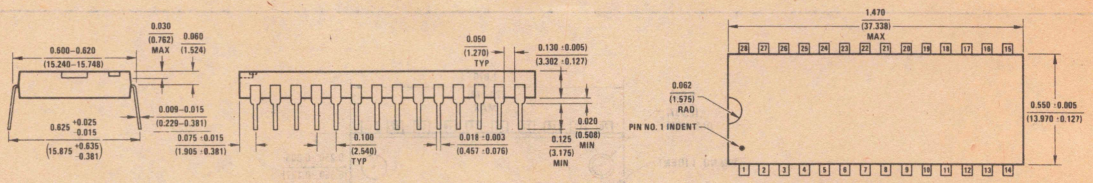

NS Package N28A
28-Lead Molded DIP (N)

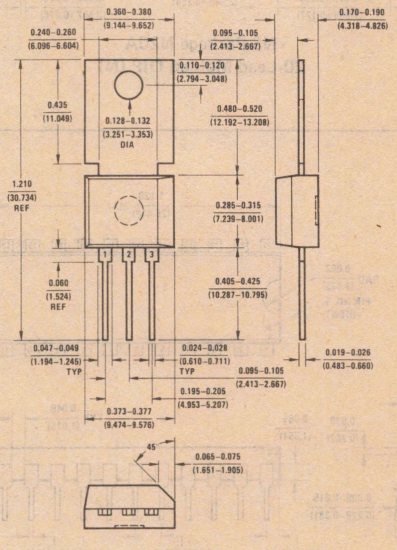

NS Package P03A
3-Lead TO-202 Power Package (P)

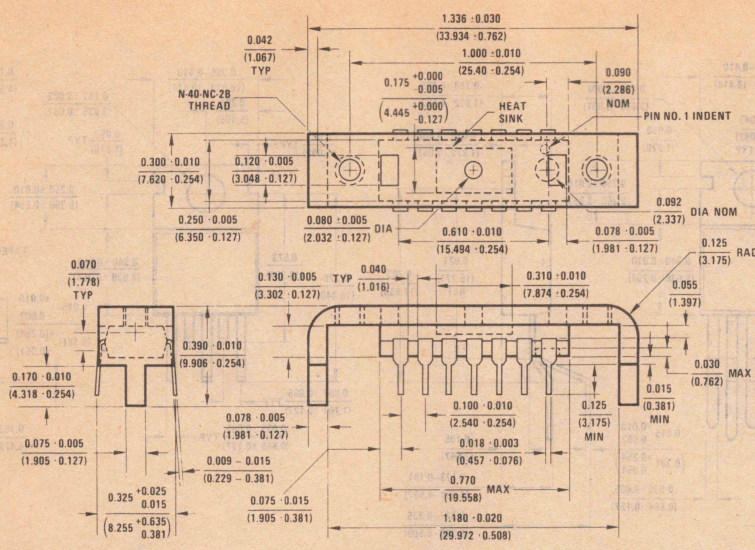

NS Package S14A
14-Lead "SGS" Type Power DIP (S)

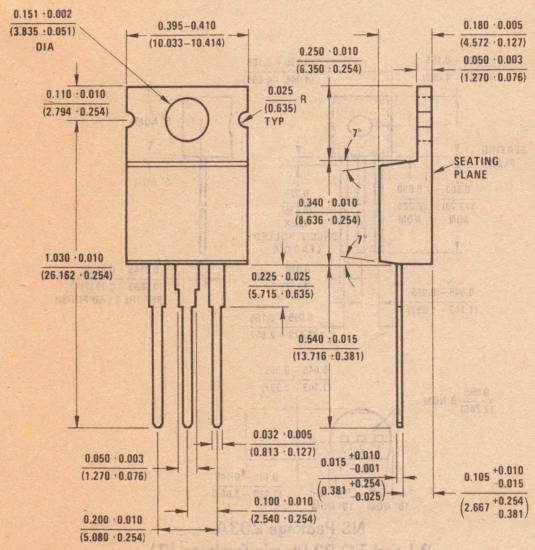

NS Package TO3B
3-Lead TO-220 Power Package (T)

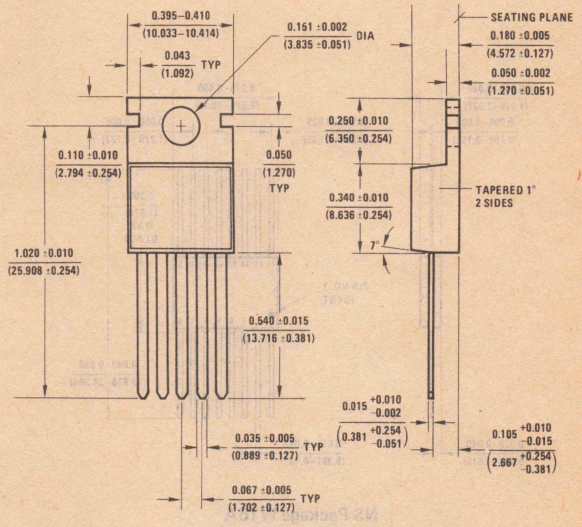

NS Package T05A
5-Lead TO-220 Power Package (T)

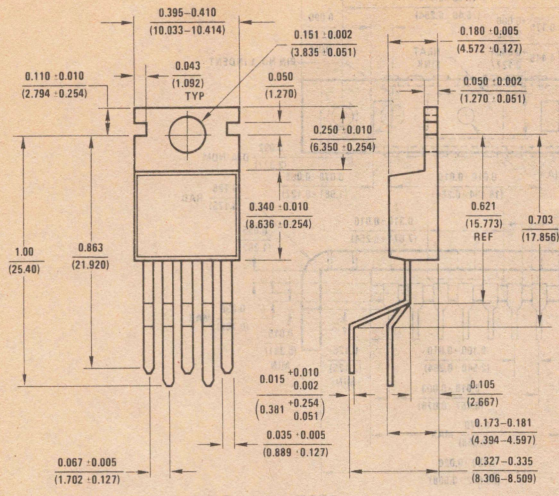

NS Package T05B
5-Lead TO-220 Power Package (T)

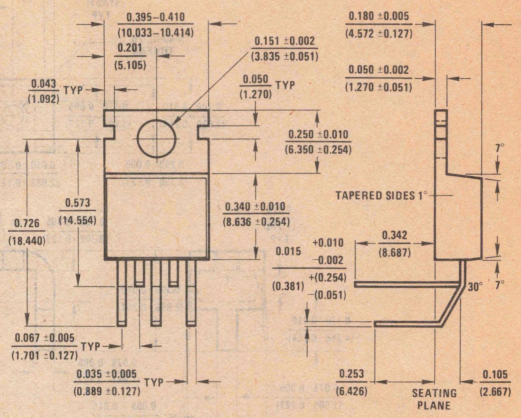

NS Package T05C
5-Lead TO-220 Power Package (T)

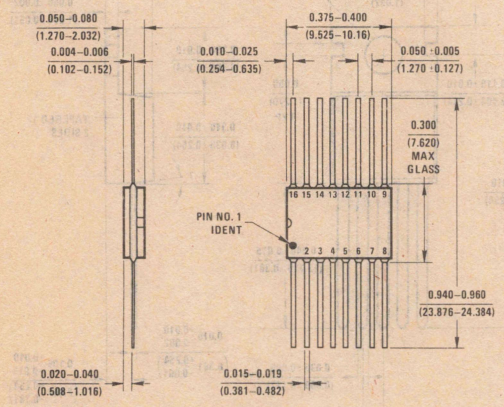

NS Package W16A
16-Lead Flat Package (W)

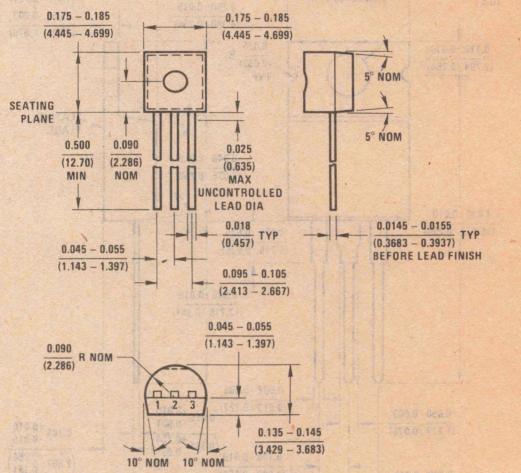

NS Package Z03A
3-Lead TO-92 Plastic Package (Z)

National Semiconductor

Appendix III. Heat Sinks & Sockets

Following is a partial list of sockets and heat dissipators for use with various packages shown in this catalog. National assumes no responsibility for their quality or availability.

8-Lead TO-3 Hardware

SOCKETS
- Keystone 4626 or 4627
- Robinsor Nugent 0002011
- Azimuth 6028 (test socket)
- Wells 6010-20811

HEAT SINKS
- Thermalloy 6002-19
- IERC LAIC3B4CB
- IERC HP1-TO3-33CB (7 °C/W)

MICA WASHERS
- Keystone 4658
- Thermalloy

24-Pin DIP

SOCKETS
- Amphenol/Barnes 821-40012-244
- Robinson Nugent IC 246-S1 or S2

12-Lead TO-8 Hardware

SOCKETS
- Amphenol/Barnes 641-30031-121, 641-01061-121 (test socket)
- Robinson Nugent MP12100S or W
- Textool 212-100-323

HEAT SINKS
- Thermalloy 2240A (33 °C/W)
- Wakefield 215CB (30 °C/W)
- IERC UP-TO8-48CB (15 °C/W)

Amphenol/Barnes
2875 S. 25th Ave.
Broadview, IL 60153

Azimuth Electronics
2377 S. El Camino Real
San Clemente, CA 92672

IERC
135 W. Magnolia Bl.
Burbank, CA 91502

Keystone Electronics Corp.
49 Bleecker St.
New York, NY 10012

Robinson Nugent Inc.
800 E. 8th St.
New Albany, IN 47150

Thermalloy
P.O. Box 34829
Dallas, TX 75234
(214) 243-4321

Wakefield Engineering Inc.
Wakefield, MA 01880

Wells Electronics
1701 S. Main St.
South Bend, IN 46613
(219) 287-5941

Notes

Notes

Notes

Notes

Notes

Notes

Notes

The Data Bookshelf: Tools for the Design Engineer

National Semiconductor's Data Bookshelf is a compendium of information about a product line unmatched in its breadth in the industry. The independent volumes that comprise the Bookshelf — over 5,000 pages — describe in excess of 6,000 solid-state devices; devices that span the entire spectrum of semiconductor processes, and that range from the simplest of discrete transistors to microprocessors — those most sophisticated marvels of modern integrated circuit technology.

Active and passive devices and circuits; hybrid and monolithic structures; discrete and integrated components . . . complete electrical and mechanical specifications; charts, graphs, and tables, test circuits and waveforms; design and application information . . . Whatever you need you'll find it in the designer's ultimate reference source — National Semiconductor's Data Bookshelf.

Ordering Information

All orders must be prepaid. Domestic orders must be accompanied by a check or a money order made payable to National Semiconductor Corp.; orders destined for shipment outside of the U.S. must be accompanied by U.S. funds. Orders will be shipped by postage-paid Third Class mail. Please allow approximately six to eight weeks for domestic delivery, longer for delivery outside the U.S.

National Semiconductor

National's
Data Bookshelf
Order Form

Please send me the volumes of the National Semiconductor DATA BOOKSHELF that I have selected below. I have enclosed a check or money order for the total amount of the order, made payable to National Semiconductor Corp.

Name _____ Purchase Order # _____

Street Address _____

City _____ State/Country _____ Zip _____

copies @ $4.00, CMOS Databook, 1978 . . . . . Total $ _____

copies @ $4.00, Data Acquisition Handbook, 1978 . . . . . Total $ _____

copies @ $4.00, Interface Databook, 1978 . . . . . Total $ _____

copies @ $4.00, Linear Applications Handbook . . . . . Total $ _____

copies @ $4.00, Linear Databook, 1978 . . . . . Total $ _____

copies @ $4.00, Memory Databook, 1978 . . . . . Total $ _____

copies @ $4.00, Memory Applications, 1978 . . . . . Total $ _____

copies @ $3.00, Microprocessor Applications in Business, Science and Industry, 1977 . . . . . Total $ _____

copies @ $4.00, SC/MP Microprocessor Applications, 1977 . . . . . Total $ _____

copies @ $3.00, Pressure Transducer Handbook, 1977 . . . . . Total $ _____

copies @ $4.00, Special Function Databook, 1979 . . . . . Total $ _____

copies @ $4.00, Discrete Databook, 2/78 . . . . . Total $ _____

Subtotal $ _____

(California residents add 6% Sales Tax*.) $ _____

Grand Total $ _____

Send a facsimile of the above form to:

National Semiconductor Corp.
P.O. Box 60876, Sunnyvale, CA 94088

Postage will be paid by National Semiconductor Corp. Please allow four to six weeks for delivery.

*(San Francisco Bay Area residents add 6½% Sales Tax.)

National Semiconductor Corporation
2900 Semiconductor Drive
Santa Clara, California 95051
Tel: (408) 737-5000
TWX: (910) 339-9240

National Semiconductor
District Sales Office
345 Wilson Avenue, Suite 404
Downsview, Ontario M3H 5W1
Canada
Tel: (416) 635-7260

Mexicana de Electronica
Industrial S.A.
Tlacoquemecatl No. 139-401
Esquina Adolfo Prieto
Mexico 12, D.F.
Tel: 575-78-68, 575-79-24

NS Electronics Do Brasil
Avda Brigadeiro Faria Lima 844
11 Andar Conjunto 1104
Jardim Paulistano
Sao Paulo, Brasil
Telex: 1121008 CABINE SAO PAULO

National Semiconductor GmbH
Elsenheimerstrasse 61-II
8000 München 21
West Germany
Tel: (089) 576091
Telex: 05-22772

National Semiconductor (UK) Ltd.
301 Harpur Centre
Horne Lane
Bedford MK40 1TR
United Kingdom
Tel: 0234-47147
Telex: 826 209

National Semiconductor
789 Ave. Houba de Strooper
1020 Bruxelles
Belgium
Tel: (02) 4783400
Telex: 61007

National Semiconductor Ltd.
Vodroffsvej 44
1900 Copenhagen V
Denmark
Tel: (01) 356533
Telex: 15179

National Semiconductor France
Expansion 10000
28, rue de la Redoute
92-260 Fontenay aux Roses
France
Tel: 660.81.40
Telex: NSF250956

National Semiconductor SRL
Via Alberto Mario 26
20149 Milano
Italy
Tel: (02) 469 28 64/469 24 31
Telex: 332835

National Semiconductor Sweden
Algrytevagen 23
S-127 32 Skarholmen
Sweden
Tel: (8) 970835
Telex: 10731

NS International Inc., Japan
Miyake Building
1-9 Yotsuya, Shinjuku-ku 160
Tokyo, Japan
Tel: (04) 355-5711
TWX: 232-2015 JSCJ-J

National Semiconductor (Hong Kong) Ltd.
8th Floor,
Cheung Kong Electronic Bldg.
4 Hing Yip Street
Kwun Tong
Kowloon, Hong Kong
Tel: 3-899235
Telex: 73866 NSEHK HX
Cable: NATSEMI

NS Electronics Pty. Ltd.
Cnr. Stud Rd. & Mtn. Highway
Bayswater, Victoria 3153
Australia
Tel: 03-729-6333
Telex: 32096

National Semiconductor (Pty.) Ltd.
No. 1100 Lower Delta Road
Singapore 3
Tel: 2700011
Telex: NAT SEMI RS 21402

National Semiconductor (Taiwan) Ltd.
3rd Floor, Apollo Bldg.,
No. 218-7 Chung Shiao E. Road,
Sec 4, Taipei, Taiwan
P.O. Box 68-332 Taipei
Tel: 7310393-4, 7310465-6
Telex: 22837 NSTW
Cable: NSTW Taipei

National Semiconductor (Hong Kong) Ltd.
Korea Liaison Office
Rm. 607, 615 Seoul Bldg.
6, 2 Ka Huehyun-Dong Bldg.
C.P.O. Box 7941
Jung Ku, Seoul 100
Korea
Tel: 28-4746

© 1979 National Semiconductor Corp. DA-CP95M59/Printed in U.S.A.